CONFIGURATION GUIDE

RUCKUS FastIron Layer 2 Switching Configuration Guide, 08.0.90

Supporting FastIron Software Release 08.0.90

Part Number: 53-1005562-09
Publication Date: 17 October 2022

Copyright, Trademark and Proprietary Rights Information

© 2022 CommScope, Inc. All rights reserved.

No part of this content may be reproduced in any form or by any means or used to make any derivative work (such as translation, transformation, or adaptation) without written permission from CommScope, Inc. and/or its affiliates ("CommScope"). CommScope reserves the right to revise or change this content from time to time without obligation on the part of CommScope to provide notification of such revision or change.

Export Restrictions

These products and associated technical data (in print or electronic form) may be subject to export control laws of the United States of America. It is your responsibility to determine the applicable regulations and to comply with them. The following notice is applicable for all products or technology subject to export control:

These items are controlled by the U.S. Government and authorized for export only to the country of ultimate destination for use by the ultimate consignee or end-user(s) herein identified. They may not be resold, transferred, or otherwise disposed of, to any other country or to any person other than the authorized ultimate consignee or end-user(s), either in their original form or after being incorporated into other items, without first obtaining approval from the U.S. government or as otherwise authorized by U.S. law and regulations.

Disclaimer

THIS CONTENT AND ASSOCIATED PRODUCTS OR SERVICES ("MATERIALS"), ARE PROVIDED "AS IS" AND WITHOUT WARRANTIES OF ANY KIND, WHETHER EXPRESS OR IMPLIED. TO THE FULLEST EXTENT PERMISSIBLE PURSUANT TO APPLICABLE LAW, COMMSCOPE DISCLAIMS ALL WARRANTIES, EXPRESS OR IMPLIED, INCLUDING, BUT NOT LIMITED TO, IMPLIED WARRANTIES OF MERCHANTABILITY AND FITNESS FOR A PARTICULAR PURPOSE, TITLE, NON-INFRINGEMENT, FREEDOM FROM COMPUTER VIRUS, AND WARRANTIES ARISING FROM COURSE OF DEALING OR COURSE OF PERFORMANCE. CommScope does not represent or warrant that the functions described or contained in the Materials will be uninterrupted or error-free, that defects will be corrected, or are free of viruses or other harmful components. CommScope does not make any warranties or representations regarding the use of the Materials in terms of their completeness, correctness, accuracy, adequacy, usefulness, timeliness, reliability or otherwise. As a condition of your use of the Materials, you warrant to CommScope that you will not make use thereof for any purpose that is unlawful or prohibited by their associated terms of use.

Limitation of Liability

IN NO EVENT SHALL COMMSCOPE, COMMSCOPE AFFILIATES, OR THEIR OFFICERS, DIRECTORS, EMPLOYEES, AGENTS, SUPPLIERS, LICENSORS AND THIRD PARTY PARTNERS, BE LIABLE FOR ANY DIRECT, INDIRECT, SPECIAL, PUNITIVE, INCIDENTAL, EXEMPLARY OR CONSEQUENTIAL DAMAGES, OR ANY DAMAGES WHATSOEVER, EVEN IF COMMSCOPE HAS BEEN PREVIOUSLY ADVISED OF THE POSSIBILITY OF SUCH DAMAGES, WHETHER IN AN ACTION UNDER CONTRACT, TORT, OR ANY OTHER THEORY ARISING FROM YOUR ACCESS TO, OR USE OF, THE MATERIALS. Because some jurisdictions do not allow limitations on how long an implied warranty lasts, or the exclusion or limitation of liability for consequential or incidental damages, some of the above limitations may not apply to you.

Trademarks

ARRIS, the ARRIS logo, COMMSCOPE, RUCKUS, RUCKUS WIRELESS, the Ruckus logo, the Big Dog design, BEAMFLEX, CHANNELFLY, FASTIRON, ICX, SMARTCELL and UNLEASHED are trademarks of CommScope, Inc. and/or its affiliates. Wi-Fi Alliance, Wi-Fi, the Wi-Fi logo, Wi-Fi Certified, the Wi-Fi CERTIFIED logo, Wi-Fi Protected Access, the Wi-Fi Protected Setup logo, Wi-Fi Protected Setup, Wi-Fi Multimedia and WPA2 and WMM are trademarks or registered trademarks of Wi-Fi Alliance. All other trademarks are the property of their respective owners.

Contents

Preface **11**
Contacting RUCKUS Customer Services and Support 11
What Support Do I Need? 11
Open a Case 11
Self-Service Resources 12
Document Feedback 12
RUCKUS Product Documentation Resources 12
Online Training Resources 12
Document Conventions 13
Notes, Cautions, and Safety Warnings 13
Command Syntax Conventions 13

About This Document **15**
What's new in this document 15
Supported Hardware 16
How Command Information is Presented in this Configuration Guide 16

Remote Fault Notification **17**
Remote Fault Notification on 1Gbps fiber connections 17
Enabling remote fault notification 17

Metro Ring Protocol **19**
Metro Ring Protocol Overview 19
Metro Ring Protocol Configuration Notes 21
MRP rings with shared interfaces (MRP Phase 2) 21
Selection of master node 22
MRP rings without shared interfaces (MRP Phase 1) 23
Ring initialization 24
RHP processing in MRP Phase 1 26
RHP processing in MRP Phase 2 28
How ring breaks are detected and healed 28
Master VLANs and customer VLANs 30
Metro Ring Protocol configuration 32
Adding an MRP ring to a VLAN 32
Changing the hello and preforwarding times 33
Metro Ring Protocol diagnostics 33
Enabling MRP diagnostics 34
Displaying MRP diagnostics 34
Displaying MRP information 34
Topology group configuration information 35
Ring configuration information and statistics 35
MRP CLI example 35
MRP commands on Switch A (master node) 35
MRP commands on Switch B 36
MRP commands on Switch C 36
MRP commands on Switch D 36

Virtual Switch Redundancy Protocol (VSRP) **39**

VSRP overview 39
VSRP configuration notes and feature limitations 41
VSRP redundancy 41
Master election and failover 41
VSRP failover 41
VSRP priority calculation 42
MAC address failover on VSRP-aware devices 45
VSRP interval timers 46
Configuring device redundancy using VSRP 46
Configuring optional VSRP parameters 47
Configuring authentication on VSRP interfaces 48
Tracking ports and setting the VSRP priority 49
Disabling backup pre-emption setting 50
Disabling VSRP backup preemption 50
VSRP-aware security features 51
Configuring security parameters on a VSRP-aware device 51
VSRP fast start 52
Special considerations when configuring VSRP fast start 52
Recommendations for configuring VSRP fast start 52
Configuring VSRP fast start globally 52
VSRP and MRP signaling 53

UDLD 57
UDLD overview 57
UDLD for tagged ports 58
Configuration notes and feature limitations for UDLD 58
Configuring UDLD 58
Displaying information for all ports 59
Displaying information for a single port 59
Clearing UDLD statistics 60

Link Aggregation Group 61
Overview of link aggregation 61
LAG virtual interface 62
LAG virtual interface MAC 62
LAG virtual anchor speed 63
LAG Formation Rules 63
Error disable 64
Error disable recovery 64
Use cases 65
Configuration notes for FastIron devices in a traditional stack 65
Maximum number of LAGs 66
Upgrade and downgrade notes 67
LAG Load Sharing 67
LAG hashing on stacking products 68
Symmetric load balancing 68
Use case: Deploying RUCKUS ICX 7750 as a traffic splitter in a DPI solution 70
Configuring a LAG 71
Creating a Link Aggregation Group (LAG) 71
Configuring LAG virtual interface 72
Configuring a Layer 3 Link Aggregration Group (LAG) 73

Configuring an LACP timeout ... 74
Specifying the LAG threshold for a LAG group ... 74
Disabling ports within a LAG ... 75
Enabling ports within a LAG ... 75
Deleting a port from a currently operational LAG ... 75
Monitoring LAG virtual interface and individual LAG port ... 75
Assigning a name to a port within a LAG ... 76
Enabling sFlow forwarding on a port in a LAG ... 77
Setting the sFlow sampling rate for a LAG ... 77
IP assignment within a LAG ... 77
Renaming an existing LAG ... 78
Displaying LAG information ... 78
Enabling LAG hardware failover ... 80
Preboot eXecution Environment boot support ... 80
User-configured peer information per LACP ... 81
Resilient hashing ... 82
Resilient hashing limitations ... 82
Configuring resilient hashing ... 83

Multi-Chassis Trunking ... 85
Multi-Chassis Trunking Overview ... 85
How MCT Works ... 85
MCT Terminology ... 86
MCT Data Flow ... 87
MCT and VLANs ... 90
MCT Feature Interaction and Unsupported Features ... 90
MCT Board Type Compatibility ... 91
Basic MCT Configuration ... 92
MCT configuration considerations ... 92
Differences in Configuring MCT for the Switch and Router Image ... 93
Configuring MCT ... 93
Forcing a Port Up in a Basic MCT Configuration ... 97
Cluster Client Automatic Configuration ... 98
Setting Up Cluster Client Automatic Configuration ... 98
MCT Failover Scenarios ... 99
Cluster Failover Mode ... 100
Client Isolation Mode ... 100
Shutting Down All Client Interfaces ... 100
Using the Keep-Alive VLAN ... 101
Setting Keep-Alive Timers and Hold Time ... 101
Layer 2 Behavior with MCT ... 101
MAC Database Update ... 101
Cluster MAC types ... 102
MAC aging ... 102
MAC flush ... 102
Syncing router MAC addresses to peer MCT devices ... 102
Dynamic Trunks ... 103
Port Loop Detection ... 103
MCT Layer 2 Protocols ... 103
Layer 2 Multicast Snooping over MCT ... 104
Layer 3 Behavior with MCT ... 110

Layer 3 Unicast Forwarding over MCT....111
User-defined VRF Support over MCT....112
VRRP or VRRP-E over an MCT-enabled network....113
OSPF and BGP over an MCT-enabled network....113
Layer 3 with MCT configuration considerations....114
MCT configuration for a single-level MCT deployment....115
MCT Configuration with VRRP-E....117
MCT Configuration with OSPF....118
MCT Configuration with BGP....119
PIM Over MCT Intermediate Router Functionality....120
Displaying MCT information....125
Displaying peer and client states....125
Displaying state machine information....126
Displaying cluster, peer, and client states....126
Displaying information about Ethernet interfaces....127
Displaying STP information....128
MAC show and clear Commands....128
Displaying MDUP Packet Statistics....129
Single-Level MCT Configuration Example....129
Client 1 Configuration....130
Client 2 Configuration....131
AGG-A (R1) Configuration....131
AGG-B (R2) Configuration....132
Two-Level MCT Configuration Example....132
AGG-A (R1) Configuration....134
AGG-B (R2) Configuration....135
DIST-A (R3) Configuration....135
DIST-B (R4) Configuration....136
MCT Configuration Examples Using STP....137
AGG-A (R1) Configuration....138
AGG-B (R2) Configuration....139
Client 1 Configuration....139
Client 2 Configuration....140
Configuring the Per-VLAN Spanning Tree on the MCT Clients Example....140
STP Configuration Example on MCT Cluster Devices....141
Configure the Per-VLAN Spanning Tree on the MCT Cluster Devices Example....141

MVRP....143
MVRP Overview....143
MRP messages used by MVRP....143
MVRP Timers....144
MVRP Registration Modes....144
MVRP Application Example....144
MVRP Configuration Notes....147
Configuring MVRP....148

Spanning Tree Protocol....153
STP overview....153
Standard STP parameter configuration....153
STP parameters and defaults....153
Enabling or disabling the Spanning Tree Protocol (STP)....155

Changing STP bridge and port parameters....156
STP protection enhancement....157
Displaying STP information....158
STP feature configuration....161
Fast port span....161
Fast Uplink Span....163
802.1W Rapid Spanning Tree (RSTP)....165
802.1W Draft 3....201
Single Spanning Tree (SSTP)....205
STP per VLAN group....207
Spanning Tree Path Cost Support for 802.1D 2004....210
PVST/PVST+ compatibility....211
Overview of PVST and PVST+....212
Configuring PVST+ support....213
Displaying PVST+ support information....214
PVST+ configuration examples....214
PVST+ Protect....216
PVRST compatibility....219
BPDU guard....219
Enabling BPDU protection by port....220
Re-enabling ports disabled by BPDU guard....220
Displaying the BPDU guard status....220
BPDU guard status example console messages....221
Root guard....222
Enabling STP root guard....222
Displaying the STP root guard....222
Displaying the root guard by VLAN....222
Designated Protection....223
Enabling Designated Protection on a port....223
Syslog message for a port in designated inconsistent state....223
Packet InError Detection....224
Configuring Packet InError Detection....224
Syslog message for error-disabled port due to inError packets....225
Error disable recovery....225
Enabling an error-disabled port automatically....225
Enabling an error-disabled port manually....225
Setting the recovery interval....225
Displaying the error disable recovery state by interface....225
Displaying the recovery state for all conditions....226
Displaying the recovery state by port number and cause....226
Errdisable Syslog messages....226
802.1s Multiple Spanning Tree Protocol....227
Multiple spanning-tree regions....227
Configuration notes....228
Configuring MSTP mode and scope....228
Reduced occurrences of MSTP reconvergence....229
Configuring additional MSTP parameters....230
MSTP root guard....238
xSTP Syslog for BPDU Threshold....240
Displaying xSTP statistics....241

VLANs **243**
VLAN overview 243
VLAN support on FastIron devices 243
Layer 2 Port-based VLANs 243
Configuring port-based VLANs on Device-A 246
Configuring port-based VLANs on Device-B 247
Configuring port-based VLANs on Device-C 247
Modifying a port-based VLAN 248
Multi-Range VLANs 251
Default VLAN 254
802.1Q tagging 256
Spanning Tree Protocol (STP) 258
Virtual routing interfaces 258
VLAN and virtual routing interface groups 259
Super aggregated VLANs 259
Trunk group ports and VLAN membership 259
Summary of VLAN configuration rules 260
Routing between VLANs 260
Virtual routing interfaces (Layer 2 Switches only) 260
Routing between VLANs using virtual routing interfaces (Layer 3 Switches only) 261
Dynamic port assignment (Layer 2 Switches and Layer 3 Switches) 261
Assigning a Different VLAN ID to Default and Reserved VLANs 261
Assigning trunk group ports 263
Enable spanning tree on a VLAN 263
Enabling Port-Based VLANs and Tagging a Port to the VLAN 264
Routing between VLANs using virtual routing interfaces (Layer 3 Switches only) 264
Configuring Layer 3 VLANs and virtual routing interfaces on the Device-A 265
Configuring Layer 3 VLANs and virtual routing interfaces for Device-B 267
Configuring Layer 3 VLANs and virtual routing interfaces for Device-C 268
VLAN and VE pre-provisioning 269
Sample configuration 269
Pre-provisioning ACL on a VE 270
VLAN-based static MAC entries configuration 270
Configuring a VLAN to drop static MAC entries 271
IP subnet address on multiple port-based VLAN configuration 271
VLAN groups and virtual routing interface group 273
Configuring a VLAN Group 274
Configuring a Virtual Routing Interface Group 275
Displaying the VLAN group and virtual routing interface group information 276
Allocating Memory for More VLANs, More Associated ports, or More Virtual Routing Interfaces 276
Topology groups 277
Master VLAN and member VLANs 278
Control ports and free ports 278
Topology group configuration considerations 278
Configuring a Topology Group 279
Displaying STP information 280
Displaying topology group information 280
Super-aggregated VLAN configuration 280
Configuration notes for aggregated VLANs 284
Configuring aggregated VLANs 284

Verifying the aggregated VLAN configuration 285
Complete CLI examples for aggregated VLANs 285
802.1ad Tagging Configuration 288
Configuration Rules for 802.1ad Tagging 288
Enabling 802.1ad Tagging 289
Example 802.1ad configuration 289
Selective Q-in-Q 290
802.1Q (Q-in-Q) BPDU tunneling 294
Simultaneous support for tagged and untagged VLANs 298
VLAN Mapping 299
Basic VLAN mapping deployment 299
VLAN mapping configuration 300
VLAN mapping considerations 300
Scaling considerations 301
Private VLAN configuration 301
Multiple tagged and untagged support for PVLANs 305
Configuration notes for PVLANs and standard VLANs 305
CLI example for a general PVLAN network 309
Configuration example for implicit dual-mode PVLAN network 309
Multiple promiscuous ports support in private VLANs 310
PVLAN support over LAG 311
Displaying VLAN Information 312

VXLAN 315
VXLAN Gateway Overview 315
VXLAN Ethernet Frame Encapsulation 316
Unicast Forwarding in VXLAN Implementations 317
BUM Traffic Forwarding in VXLAN Implementations 318
Inner Frame VLAN Tagging 319
Load Balancing Entropy 319
MAC learning 320
Quality of Service support 320
Unsupported features 320
VXLAN configuration considerations 320
Scaling considerations 321
Protocol considerations 321
VXLAN feature support 321
RIOT using a two-device configuration 322
Configuring VXLAN 323
Displaying VXLAN information 326

VXLAN-related syslog messages 329

Protected Port 331
Protected port 331
Configuring protected port 333

Preface

- Contacting RUCKUS Customer Services and Support 11
- Document Feedback 12
- RUCKUS Product Documentation Resources 12
- Online Training Resources 12
- Document Conventions 13
- Command Syntax Conventions 13

Contacting RUCKUS Customer Services and Support

The Customer Services and Support (CSS) organization is available to provide assistance to customers with active warranties on their RUCKUS products, and customers and partners with active support contracts.

For product support information and details on contacting the Support Team, go directly to the RUCKUS Support Portal using https://support.ruckuswireless.com, or go to https://www.commscope.com/ruckus and select **Support**.

What Support Do I Need?

Technical issues are usually described in terms of priority (or severity). To determine if you need to call and open a case or access the self-service resources, use the following criteria:

- Priority 1 (P1)—Critical. Network or service is down and business is impacted. No known workaround. Go to the **Open a Case** section.
- Priority 2 (P2)—High. Network or service is impacted, but not down. Business impact may be high. Workaround may be available. Go to the **Open a Case** section.
- Priority 3 (P3)—Medium. Network or service is moderately impacted, but most business remains functional. Go to the **Self-Service Resources** section.
- Priority 4 (P4)—Low. Requests for information, product documentation, or product enhancements. Go to the **Self-Service Resources** section.

Open a Case

When your entire network is down (P1), or severely impacted (P2), call the appropriate telephone number listed below to get help:

- Continental United States: 1-855-782-5871
- Canada: 1-855-782-5871
- Europe, Middle East, Africa, Central and South America, and Asia Pacific, toll-free numbers are available at https://support.ruckuswireless.com/contact-us and Live Chat is also available.
- Worldwide toll number for our support organization. Phone charges will apply: +1-650-265-0903

We suggest that you keep a physical note of the appropriate support number in case you have an entire network outage.

Self-Service Resources

The RUCKUS Support Portal at https://support.ruckuswireless.com offers a number of tools to help you to research and resolve problems with your RUCKUS products, including:

- Technical Documentation—https://support.ruckuswireless.com/documents
- Community Forums—https://forums.ruckuswireless.com/
- Knowledge Base Articles—https://support.ruckuswireless.com/answers
- Software Downloads and Release Notes—https://support.ruckuswireless.com/#products_grid
- Security Bulletins—https://support.ruckuswireless.com/security

Using these resources will help you to resolve some issues, and will provide TAC with additional data from your troubleshooting analysis if you still require assistance through a support case or RMA. If you still require help, open and manage your case at https://support.ruckuswireless.com/case_management.

Document Feedback

RUCKUS is interested in improving its documentation and welcomes your comments and suggestions.

You can email your comments to RUCKUS at #Ruckus-Docs@commscope.com.

When contacting us, include the following information:

- Document title and release number
- Document part number (on the cover page)
- Page number (if appropriate)

For example:

- RUCKUS SmartZone Upgrade Guide, Release 5.0
- Part number: 800-71850-001 Rev A
- Page 7

RUCKUS Product Documentation Resources

Visit the RUCKUS website to locate related documentation for your product and additional RUCKUS resources.

Release Notes and other user documentation are available at https://support.ruckuswireless.com/documents. You can locate the documentation by product or perform a text search. Access to Release Notes requires an active support contract and a RUCKUS Support Portal user account. Other technical documentation content is available without logging in to the RUCKUS Support Portal.

White papers, data sheets, and other product documentation are available at https://www.commscope.com/ruckus .

Online Training Resources

To access a variety of online RUCKUS training modules, including free introductory courses to wireless networking essentials, site surveys, and products, visit the RUCKUS Training Portal at https://commscopeuniversity.myabsorb.com/. The registration is a two-step process described in this video. You create a CommScope account and then register for, and request access for, CommScope University.

Document Conventions

The following table lists the text conventions that are used throughout this guide.

TABLE 1 Text Conventions

Convention	Description	Example
`monospace`	Identifies command syntax examples	`device(config)# interface ethernet 1/1/6`
bold	User interface (UI) components such as screen or page names, keyboard keys, software buttons, and field names	On the **Start** menu, click **All Programs**.
italics	Publication titles	Refer to the *RUCKUS Small Cell Release Notes* for more information.

Notes, Cautions, and Safety Warnings

Notes, cautions, and warning statements may be used in this document. They are listed in the order of increasing severity of potential hazards.

NOTE
A NOTE provides a tip, guidance, or advice, emphasizes important information, or provides a reference to related information.

ATTENTION
An ATTENTION statement indicates some information that you must read before continuing with the current action or task.



CAUTION
A CAUTION statement alerts you to situations that can be potentially hazardous to you or cause damage to hardware, firmware, software, or data.



DANGER
A DANGER statement indicates conditions or situations that can be potentially lethal or extremely hazardous to you. Safety labels are also attached directly to products to warn of these conditions or situations.

Command Syntax Conventions

Bold and italic text identify command syntax components. Delimiters and operators define groupings of parameters and their logical relationships.

Convention	Description
bold text	Identifies command names, keywords, and command options.
italic text	Identifies a variable.
[ ]	Syntax components displayed within square brackets are optional. Default responses to system prompts are enclosed in square brackets.
{**x**| **y**| **z**}	A choice of required parameters is enclosed in curly brackets separated by vertical bars. You must select one of the options.
x|**y**	A vertical bar separates mutually exclusive elements.
< >	Nonprinting characters, for example, passwords, are enclosed in angle brackets.
...	Repeat the previous element, for example, *member*[*member*...].
\	Indicates a “soft” line break in command examples. If a backslash separates two lines of a command input, enter the entire command at the prompt without the backslash.

About This Document

- What's new in this document 15
- Supported Hardware 16
- How Command Information is Presented in this Configuration Guide 16

What's new in this document

The following table describes the changes to this guide for the FastIron 08.0.90 release.

TABLE 2 Summary of changes in FastIron release 08.0.90 (October 17, 2022)

Feature	Description	Location
Metro Ring Protocol	Clarification for how traffic is handled by a secondary interface	Metro Ring Protocol Configuration Notes on page 21

TABLE 3 Summary of changes in FastIron release 08.0.90 (July 29, 2022)

Feature	Description	Location
Updates to address defects	Minor updates throughout to address defects.	All chapters.
Minor editorial updates	Minor editorial updates were made throughout.	All chapters.

TABLE 4 Summary of changes in FastIron release 08.0.90

Feature	Description	Location
ICX 7850 devices	Support for ICX 7850 devices is added in release 08.0.90.	Throughout the guide.
VLAN enhancement eliminating link flap	In FastIron release 08.0.90 and later releases, there will no longer be any link flap when a port is being added as a tagged member to a VLAN for the first time or when a port is being removed from the last tagged VLAN.	Refer to Layer 2 Port-based VLANs on page 243 for more information.
MCT board type compatibility	Multi-Chassis Trunking (MCT) requires similar functionality between peer devices and uses a software version check to ensure compatibility. A type-length-value (TLV) is introduced to differentiate between the board types used in the ICX 7650 and ICX 7850 hardware devices that can run the same software versions, but have different functional capabilities.	Refer to MCT Board Type Compatibility on page 91
Multiple VLAN Registration Protocol (MVRP)	Multiple VLAN Registration Protocol (MVRP) is a Multiple Registration Protocol (MRP) application that helps to create VLAN dynamically (VLAN registration) and automate the administration of VLAN membership (distribution and deregistration) within the network without manual intervention.	Refer to MVRP on page 143

TABLE 4 Summary of changes in FastIron release 08.0.90 (continued)

Feature	Description	Location
LAG between different default speed ports	The configuration speed validation continues to happen as part of port addition to LAG and ports with same configuration speed as that of the virtual LAG interface is accepted. This new design additionally validates the duplex of the ports against virtual LAG interfaces apart from the configuration speed validation.	Refer to Error disable on page 64
MSTP path-cost configuration	Current path cost configuration allows a port range instead of a single port.	Refer to Changing MSTP port parameters on page 234
xSTP syslog for BPDU threshold	The xSTP syslog will be created when CPU utilization is more than ISSU threshold and when the system receives more than a certain amount of xSTP BPDUs. This feature is supported on ICX 7650 and ICX 7750 only.	Refer to xSTP Syslog for BPDU Threshold on page 240

Supported Hardware

This guide supports the following product families from RUCKUS:

- ICX 7150 Series
- ICX 7250 Series
- ICX 7450 Series
- ICX 7650 Series
- ICX 7750 Series
- ICX 7850 Series

For information about the specific models and modules supported in a product family, refer to the hardware installation guide for that product family.

How Command Information is Presented in this Configuration Guide

For all new content supported in FastIron release 08.0.20 and later, command information is documented in a standalone command reference guide.

In the *RUCKUS FastIron Command Reference*, the command pages are in alphabetical order and follow a standard format to present syntax, parameters, mode, usage guidelines, examples, and command history.

NOTE
Many commands introduced before FastIron release 08.0.20 are also included in the guide.

Remote Fault Notification

- Remote Fault Notification on 1Gbps fiber connections 17
- Enabling remote fault notification 17

Remote Fault Notification on 1Gbps fiber connections

NOTE
Remote Fault Notification (RFN) is only available for 1 Gbps Ethernet Fiber ports. It is not available for 10G/100G ports and Gbps Ethernet Copper ports.

For fiber-optic connections, you can optionally configure a transmit port to notify the receive port on the remote device whenever the transmit port becomes disabled.

When you enable this feature, the transmit port notifies the remote port whenever the fiber cable is either physically disconnected or has failed. When this occurs and the feature is enabled, the device disables the link and turns OFF both LEDs associated with the ports.

For more information about the parameters supported with the gig-default command, see "Changing the Gbps fiber negotiation mode" section in the *RUCKUS FastIron Monitoring Configuration Guide*.

By default, RFN is enabled. You can configure RFN as follows:

- On a trunk group
- On an individual interface

Enabling remote fault notification

RFN configures the transmit port to notify the remote port whenever the fiber cable is either physically disconnected or has failed.

RFN is enabled (set to **auto-gig** option) by default.

1. Enter interface configuration mode to enable RFN on a particular interface.

   ```
   device(config)# interface ethernet 1/1/1
   ```

2. Re-enable RFN if it was disabled using the **neg-off** option.

   ```
   device(config-if-e1000-1/1/1)# gig-default auto-gig
   ```

   To disable RFN, use the **gig-default neg-off** command.

Metro Ring Protocol

- Metro Ring Protocol Overview 19
- MRP rings with shared interfaces (MRP Phase 2) 21
- MRP rings without shared interfaces (MRP Phase 1) 23
- Ring initialization 24
- How ring breaks are detected and healed 28
- Master VLANs and customer VLANs 30
- Metro Ring Protocol configuration 32
- Metro Ring Protocol diagnostics 33
- Displaying MRP information 34
- MRP CLI example 35

Metro Ring Protocol Overview

Metro Ring Protocol (MRP) is a RUCKUS proprietary protocol that prevents Layer 2 loops and provides fast reconvergence in Layer 2 ring topologies. It is an alternative to STP and is especially useful in Metropolitan Area Networks (MAN) where using STP has the following drawbacks:

- STP allows a maximum of seven nodes. Metro rings can easily contain more nodes than this.
- STP has a slow reconvergence time, taking many seconds or even minutes. MRP can detect and heal a break in the ring in sub-second time.

The following figure shows an example of an MRP metro ring.

FIGURE 1 Metro ring - normal state

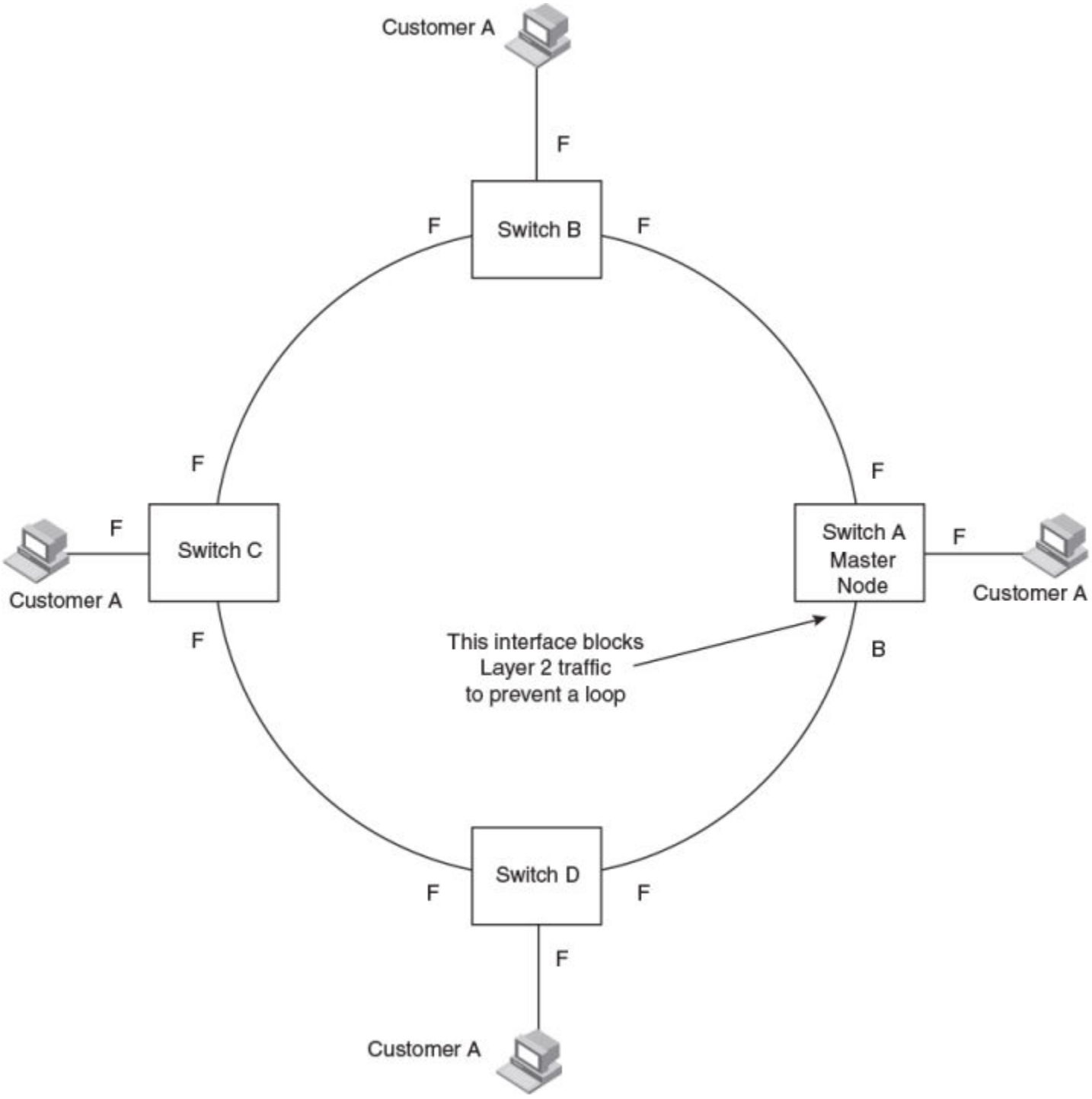

The ring in this example consists of four MRP nodes (RUCKUS switches). Each node has two interfaces with the ring. Each node also is connected to a separate customer network. The nodes forward Layer 2 traffic to and from the customer networks through the ring. The ring interfaces are all in one port-based VLAN. Each customer interface can be in the same VLAN as the ring or in a separate VLAN.

One node is configured as the master node of the MRP ring. One of the two interfaces on the master node is configured as the primary interface; the other is the secondary interface. The primary interface originates Ring Health Packets (RHPs), which are used to monitor the health of the ring. An RHP is forwarded on the ring to the next interface until it reaches the secondary interface of the master node. The secondary interface blocks the packet to prevent a Layer 2 loops.

Metro Ring Protocol Configuration Notes

- When you configure Metro Ring Protocol (MRP), RUCKUS recommends that you disable one of the ring interfaces before beginning the ring configuration. Disabling an interface prevents a Layer 2 loop from occurring while you are configuring MRP on the ring nodes. Once the MRP is configured and enabled on all the nodes, you can re-enable the interface.
- The above configurations can be configured as MRP masters or MRP members (for different rings).
- If you configure MRP on a device running Layer 3 software, then restart the device running Layer 2 software, the MRP configuration gets deleted.
- PVST+ packets received on MRP ring interfaces will be forwarded and will cause network disruption. Enabling STP Protection will prevent the MRP ring from flooding the PVST+ packets inside the ring.

MRP rings with shared interfaces (MRP Phase 2)

With MRP Phase 2, MRP rings can be configured to share the same interfaces as long as the interfaces belong to the same VLAN. Figure 2 shows examples of multiple MRP rings that share the same interface.

FIGURE 2 Examples of multiple rings sharing the same interface - MRP Phase 2

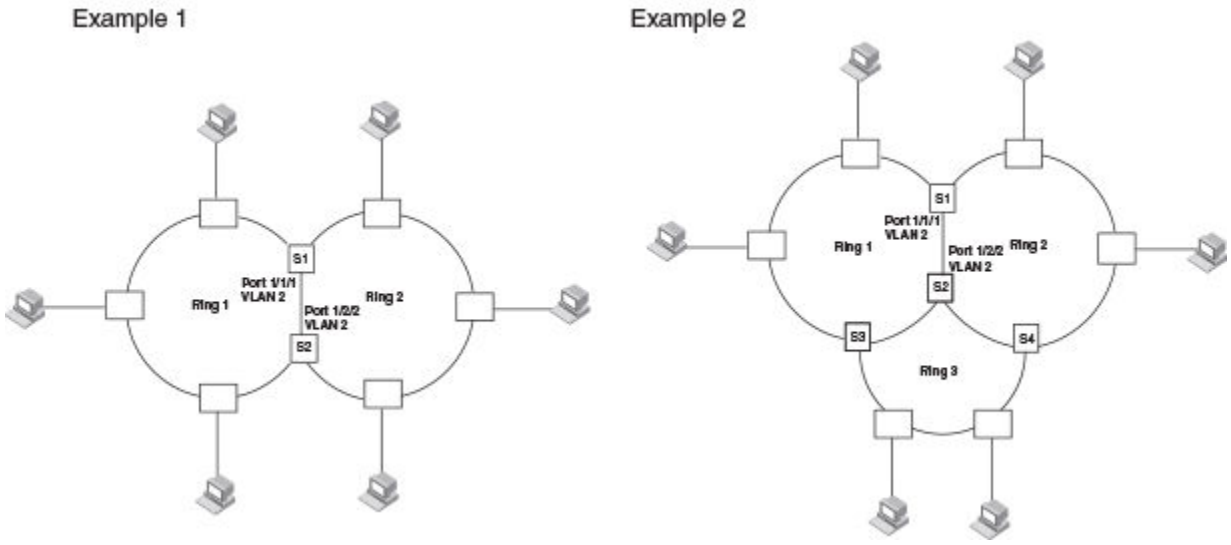

On each node that will participate in the ring, you specify the ring ID and the interfaces that will be used for ring traffic. In a multiple ring configuration, a ring ID determines its priority. The lower the ring ID, the higher priority of a ring.

A ring ID is also used to identify the interfaces that belong to a ring.

FIGURE 3 Interface IDs and types

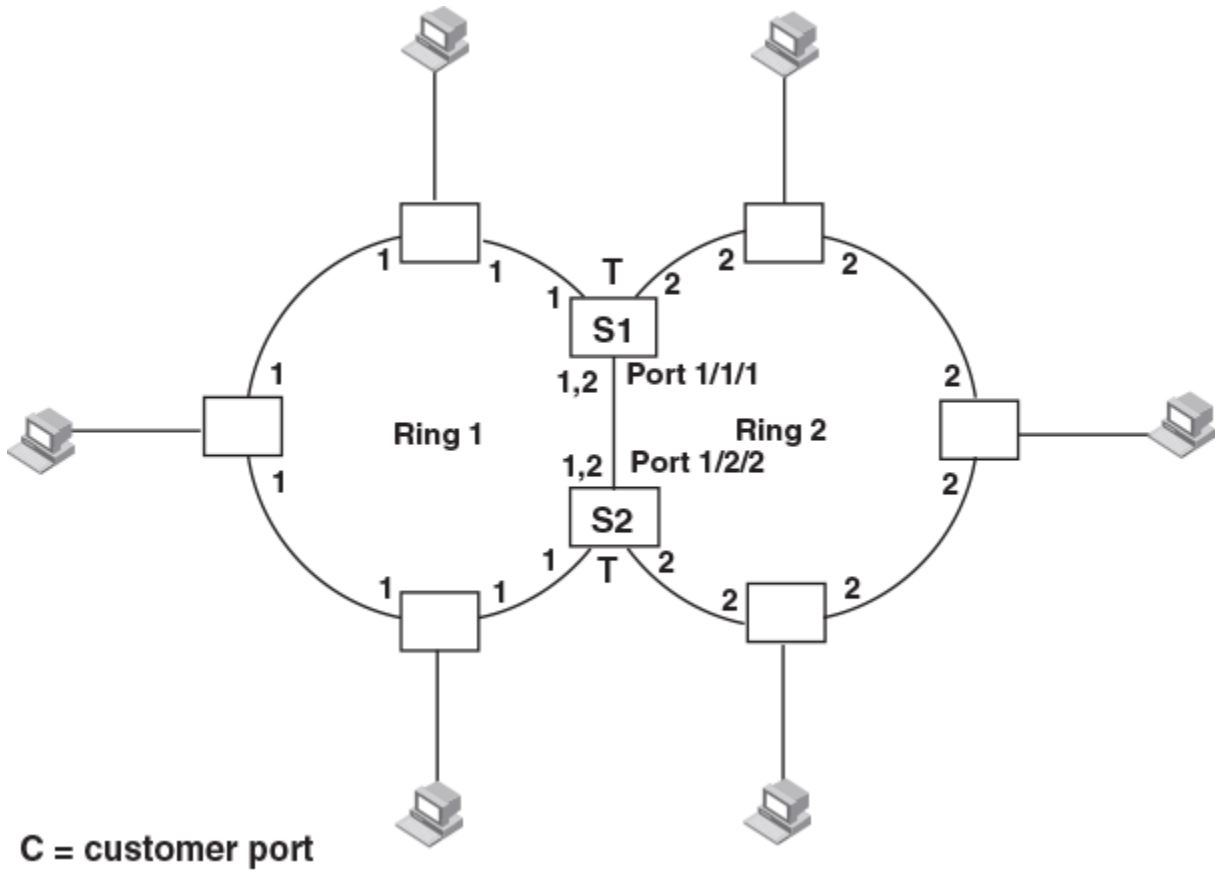

For example, in Figure 3, the ID of all interfaces on all nodes on Ring 1 is 1 and all interfaces on all nodes on Ring 2 is 2. Port 1/1/1 on node S1 and Port 1/2/2 on S2 have the IDs of 1 and 2 since the interfaces are shared by Rings 1 and 2.

The ring ID is also used to determine an interface priority. Generally, a ring ID is also the ring priority and the priority of all interfaces on that ring. However, if the interface is shared by two or more rings, then the highest priority (lowest ID) becomes the priority of the interface. For example, in Figure 3, all interfaces on Ring 1, except for Port 1/1/1 on node S1 and Port 1/2/2 on node S2 have a priority of 1. Likewise, all interfaces on Ring 2, except for Port 1/1/1 on node S1 and Port 1/2/2 on node S2 have a priority of 2. Port 1/1/1 on S1 and Port 1/2/2 on S2 have a priority of 1 since 1 is the highest priority (lowest ID) of the rings that share the interface.

If a node has interfaces that have different IDs, the interfaces that belong to the ring with the highest priority become regular ports. Those interfaces that do not belong to the ring with the highest priority become tunnel ports. In Figure 3, nodes S1 and S2 have interfaces that belong to Rings 1 and 2. Those interfaces with a priority of 1 are regular ports. The interfaces with a priority of 2 are the tunnel ports since they belong to Ring 2, which has a lower priority than Ring 1.

Selection of master node

Allowing MRP rings to share interfaces limits the nodes that can be designated as the master node. Any node on an MRP ring that does not have a shared interface can be designated as the ring master node. However, if all nodes on the ring have shared interfaces, nodes that do not have tunnel ports can be designated as the master node of that ring. If none of the nodes meet these criteria, you must change the rings' priorities by reconfiguring the rings' ID.

NOTE
Any node on an MRP ring that has two shared interfaces cannot be elected as the master node.

In Figure 3 on page 22, any of the nodes on Ring 1, even S1 or S2, can be a master node since none of its interfaces are tunnel ports. However in Ring 2, neither S1 nor S2 can be a master node since these nodes contain tunnel ports.

MRP rings without shared interfaces (MRP Phase 1)

MRP Phase 1 allows you to configure multiple MRP rings, as shown in Figure 4, but the rings cannot share the same link. For example, you cannot configure ring 1 and ring 2 to each have interfaces 1/1/1 and 1/1/2.

Also, when you configure an MRP ring, any node on the ring can be designated as the master node for the ring. A master node can be the master node of more than one ring. (Refer to Figure 4.) Each ring is an independent ring and RHP packets are processed within each ring.

FIGURE 4 Metro ring - multiple rings

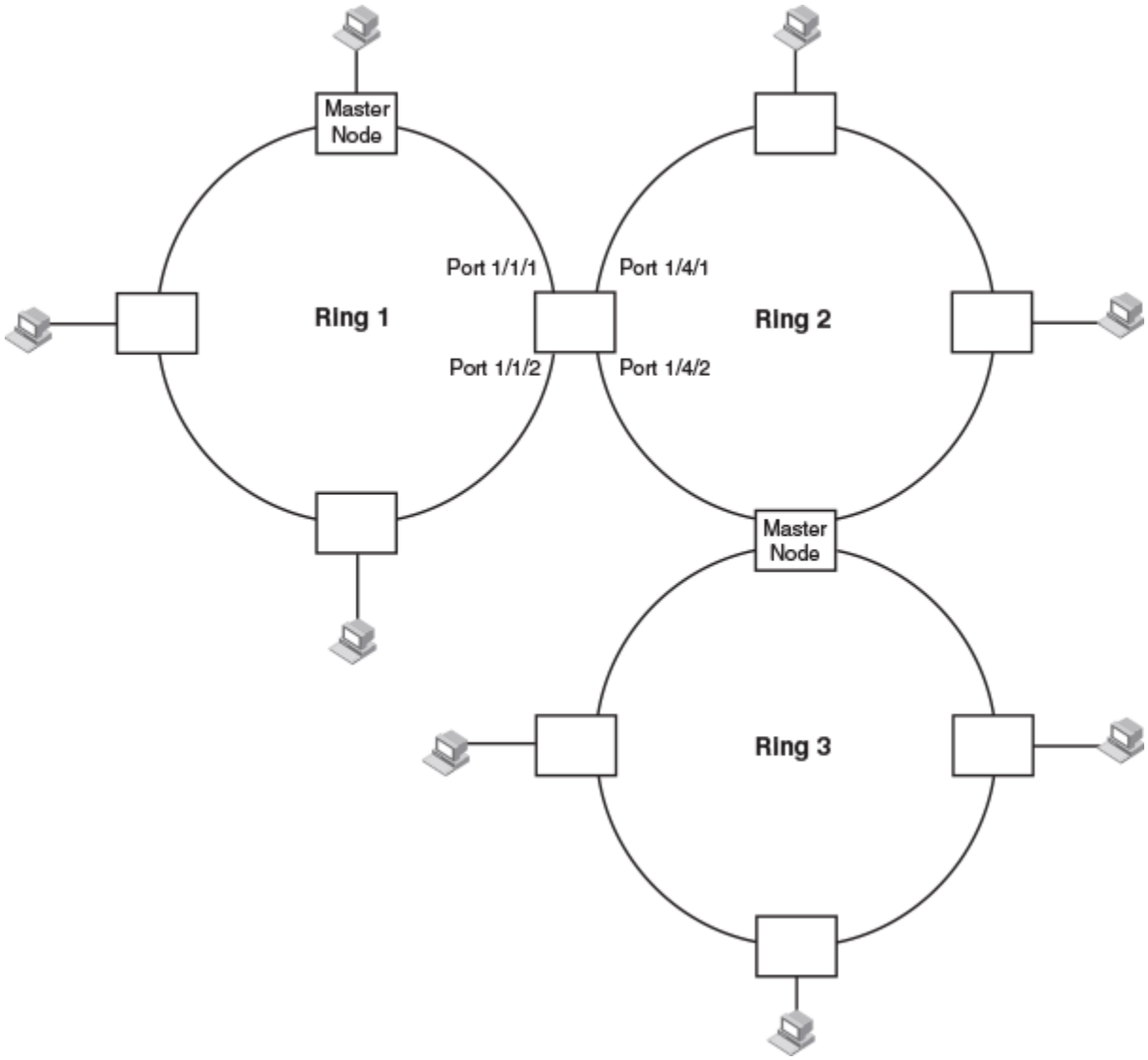

In this example, two nodes are each configured with two MRP rings. Any node in a ring can be the master for its ring. A node also can be the master for more than one ring.

Ring initialization

The ring shown in Figure 1 on page 20 shows the port states in a fully initialized ring without any broken links. Figure 5 shows the initial state of the ring, when MRP is first enabled on the ring switches. All ring interfaces on the master node and member nodes begin in the Preforwarding state (PF).

FIGURE 5 Metro ring - initial state

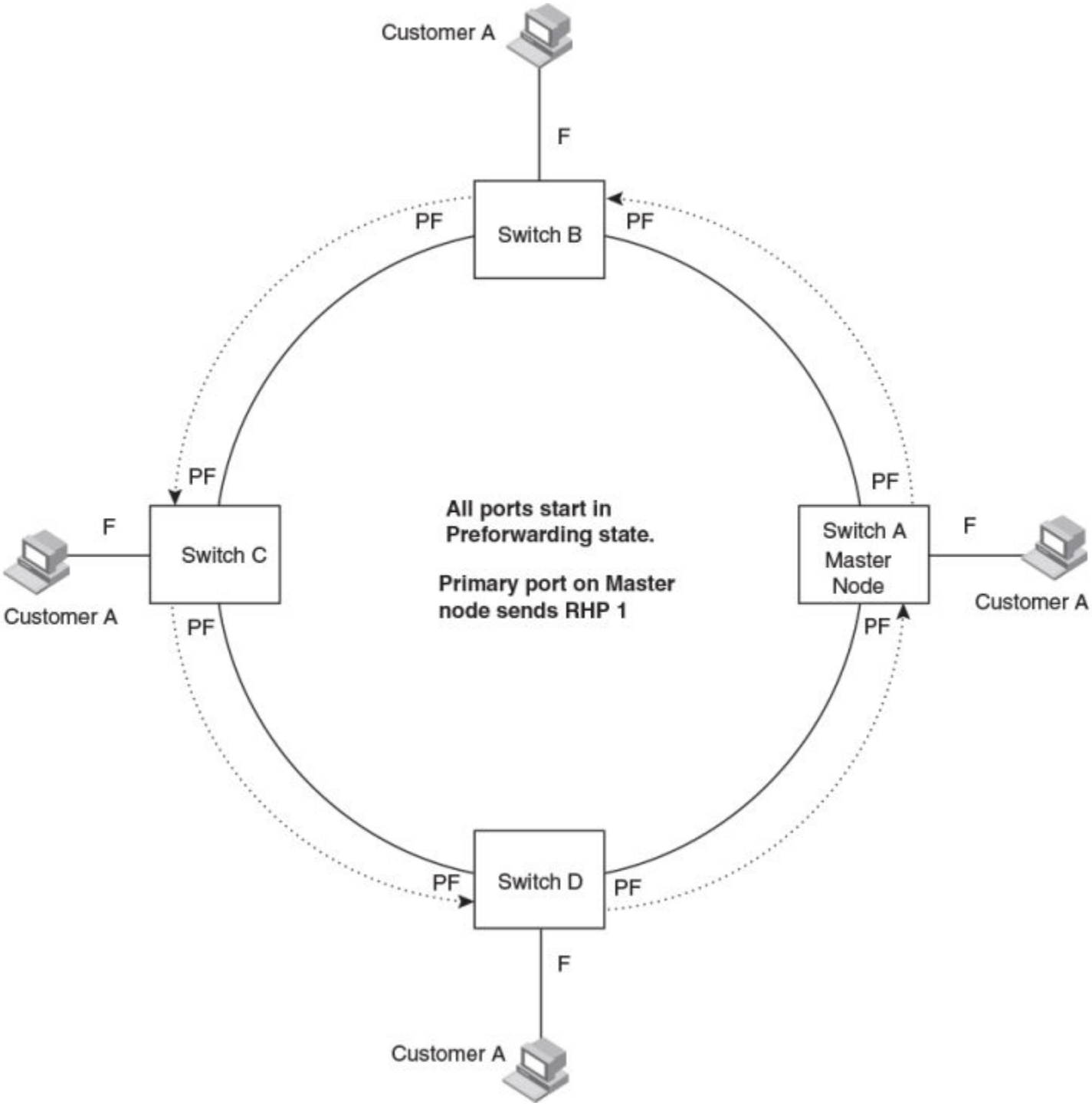

MRP uses Ring Health Packets (RHPs) to monitor the health of the ring. An RHP is an MRP protocol packet. The source address is the MAC address of the master node and the destination MAC address is a protocol address for MRP. The Master node generates RHPs and sends them on the ring. The state of a ring port depends on the RHPs.

RHP processing in MRP Phase 1

A ring interface can have one of the following MRP states:

- Preforwarding (PF) - The interface can forward RHPS but cannot forward data. All ring ports begin in this state when you enable MRP.
- Forwarding (F) - The interface can forward data as well as RHPs. An interface changes from Preforwarding to Forwarding when the port preforwarding time expires. This occurs if the port does not receive an RHP from the Master, or if the forwarding bit in the RHPs received by the port is off. This indicates a break in the ring. The port heals the ring by changing its state to Forwarding. The preforwarding time is the number of milliseconds the port will remain in the Preforwarding state before changing to the Forwarding state, even without receiving an RHP.
- Blocking (B) - The interface cannot forward data. Only the secondary interface on the Master node can be Blocking.

When MRP is enabled, all ports begin in the Preforwarding state. The primary interface on the Master node, although it is in the Preforwarding state like the other ports, immediately sends an RHP onto the ring. The secondary port on the Master node listens for the RHP.

- If the secondary port receives the RHP, all links in the ring are up and the port changes its state to Blocking. The primary port then sends another MRP with its forwarding bit set on. As each of the member ports receives the RHP, the ports changes their state to Forwarding. Typically, this occurs in sub-second time. The ring very quickly enters the fully initialized state.
- If the secondary port does not receive the RHP by the time the preforwarding time expires, a break has occurred in the ring. The port changes its state to Forwarding. The member ports also change their states from Preforwarding to Forwarding as their preforwarding timers expire. The ring is not intact, but data can still travel among the nodes using the links that are up.

The following figure shows an example.

FIGURE 6 Metro ring - from preforwarding to forwarding

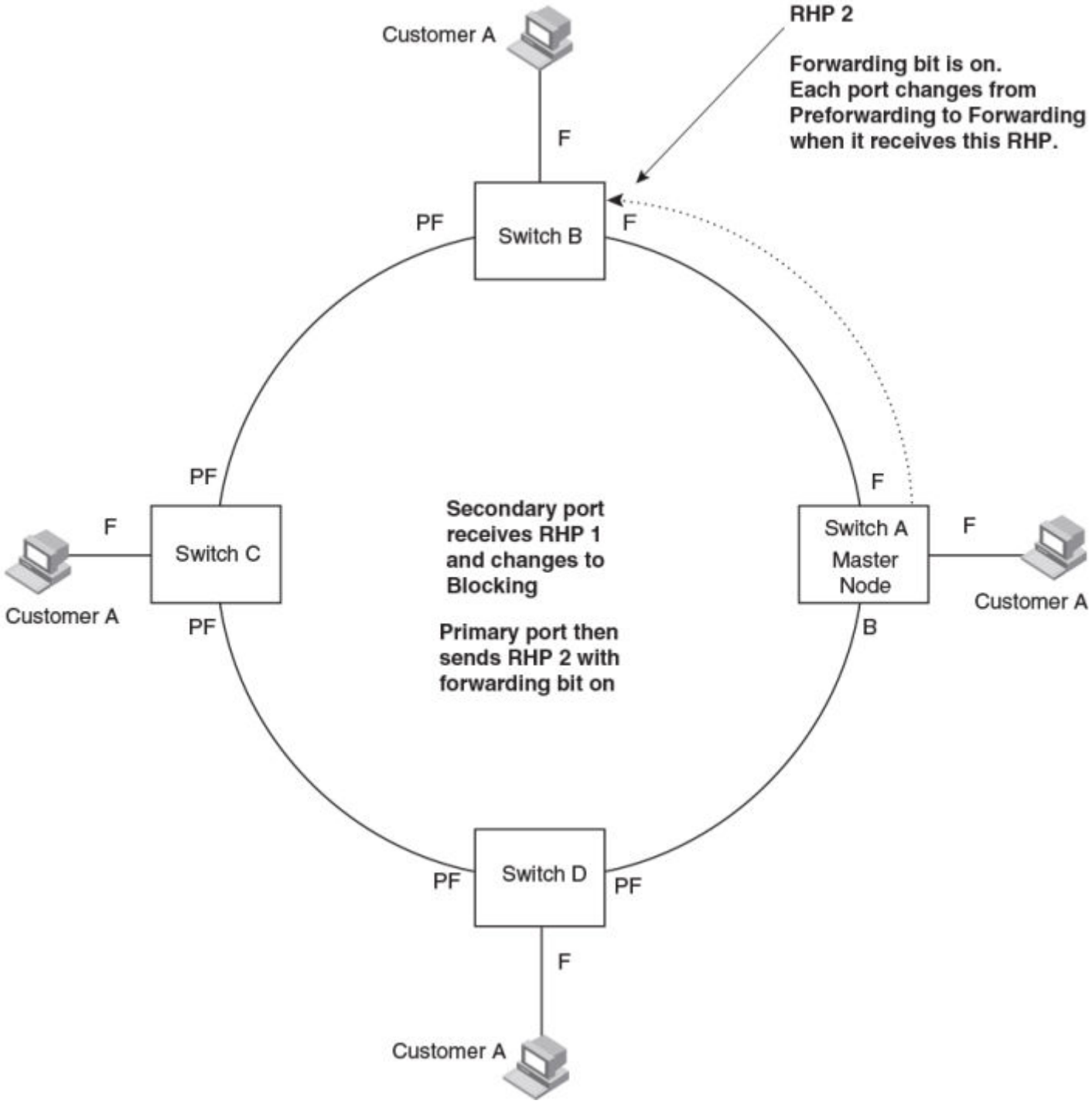

Each RHP also has a sequence number. MRP can use the sequence number to determine the round-trip time for RHPs in the ring. Refer to Metro Ring Protocol diagnostics on page 33.

RHP processing in MRP Phase 2

Figure 7 shows an example of how RHP packets are processed normally in MRP rings with shared interfaces.

FIGURE 7 Flow of RHP packets on MRP rings with shared interfaces

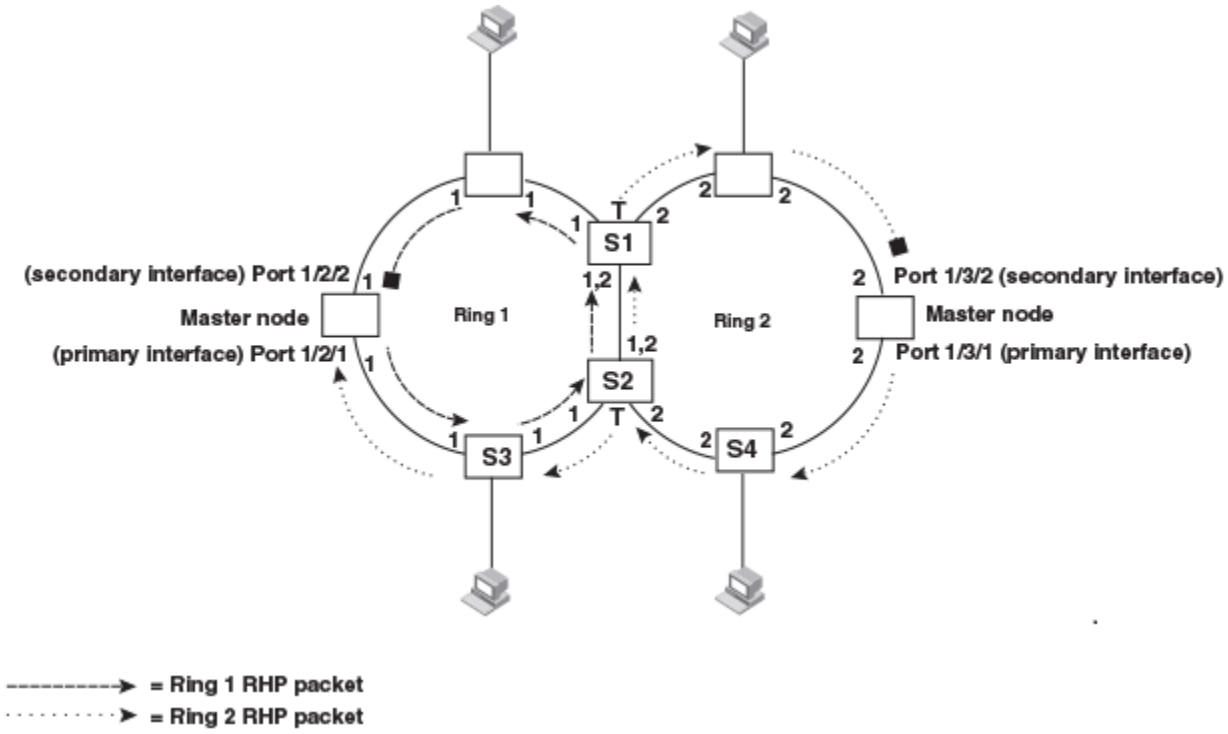

Port 1/2/1 on Ring 1 master node is the primary interface of the master node. The primary interface forwards an RHP packet on the ring. Since all the interfaces on Ring 1 are regular ports, the RHP packet is forwarded to all the interfaces until it reaches Port 1/2/2, the secondary interface of the master node. Port 1/2/2 then blocks the packet to complete the process.

On Ring 2, Port 1/3/1, is the primary interface of the master node. It sends an RHP packet on the ring. Since all ports on S4 are regular ports, the RHP packet is forwarded on those interfaces. When the packet reaches S2, the receiving interface is a tunnel port. The port compares the packet priority to its priority. Since the packet priority is the same as the tunnel port priority, the packet is forwarded up the link shared by Rings 1 and 2.

When the RHP packet reaches the interface on node S2 shared by Rings 1 and 2, the packet is forwarded since its priority is less than the interface priority. The packet continues to be forwarded to node S1 until it reaches the tunnel port on S1. That tunnel port determines that the RHP packet priority is equal to the port priority and forwards the packet. The RHP packet is forwarded to the remaining interfaces on Ring 2 until it reaches port 1/3/2, the secondary interface of the master node. Port 1/3/2 then blocks the packet to prevent a loop.

When the RHP packet from Ring 2 reached S2, it was also forwarded from S2 to S3 on Ring 1 since the port on S2 has a higher priority than the RHP packet. The packets is forwarded around Ring 1 until it reaches port 1/2/2, Ring 1 the secondary port. The RHP packet is then blocked by that port.

How ring breaks are detected and healed

Figure 8 shows ring interface states following a link break. MRP quickly heals the ring and preserves connectivity among the customer networks.

FIGURE 8 Metro ring - ring break

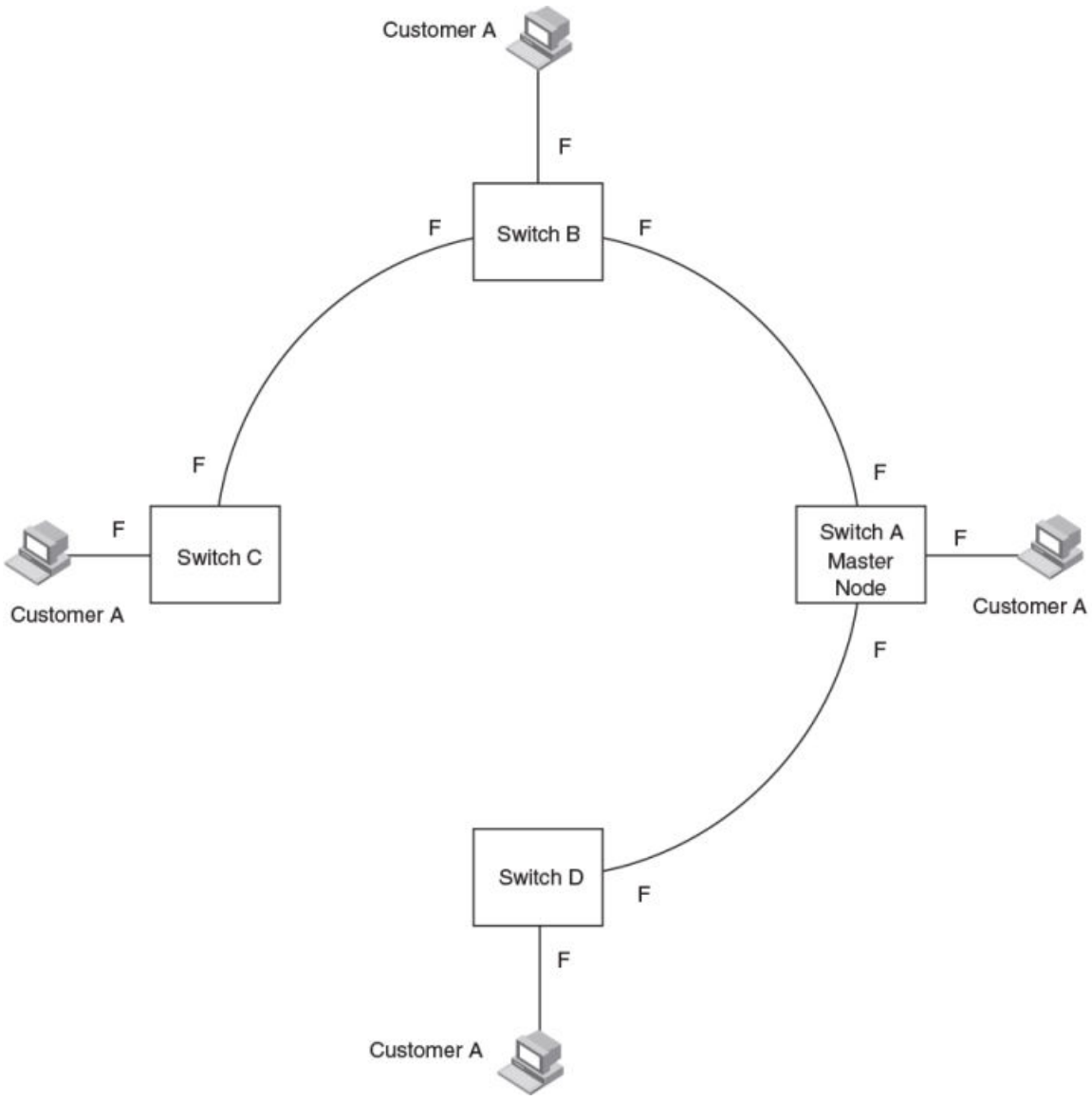

If a break in the ring occurs, MRP heals the ring by changing the states of some of the ring interfaces:

- **Blocking interface** - The Blocking interface on the Master node has a dead timer. If the dead time expires before the interface receives one of its ring RHPs, the interface changes state to Preforwarding. Once the secondary interface changes state to Preforwarding:
  - If the interface receives an RHP, the interface changes back to the Blocking state and resets the dead timer.
  - If the interface does not receive an RHP for its ring before the Preforwarding time expires, the interface changes to the Forwarding state, as shown in Figure 8.
- **Forwarding interfaces** - Each member interface remains in the Forwarding state.

When the broken link is repaired, the link interfaces come up in the Preforwarding state, which allows RHPs to travel through the restored interfaces and reach the secondary interface on the Master node:

- If an RHP reaches the Master node secondary interface, the ring is intact. The secondary interface changes to Blocking. The Master node sets the forwarding bit on in the next RHP. When the restored interfaces receive this RHP, they immediately change state to Forwarding.

- If an RHP does not reach the Master node secondary interface, the ring is still broken. The Master node does not send an RHP with the forwarding bit on. In this case, the restored interfaces remain in the Preforwarding state until the preforwarding timer expires, then change to the Forwarding state.

If the link between shared interfaces breaks (Figure 9), the secondary interface on Ring 1 master node changes to a preforwarding state. The RHP packet sent by port 1/3/1 on Ring 2 is forwarded through the interfaces on S4, then to S2. The packet is then forwarded through S2 to S3, but not from S2 to S1 since the link between the two nodes is not available. When the packet reaches Ring 1 master node, the packet is forwarded through the secondary interface since it is currently in a preforwarding state. A secondary interface in preforwarding mode ignores any RHP packet that is not from its ring. The secondary interface changes to blocking mode only when the RHP packet forwarded by its primary interface is returned.

The packet then continues around Ring 1, through the interfaces on S1 to Ring 2 until it reaches Ring 2 master node. Port 1/3/2, the secondary interface on Ring 2 changes to blocking mode since it received its own packet, then blocks the packet to prevent a loop.

FIGURE 9 Flow of RHP packets when a link for shared interfaces breaks

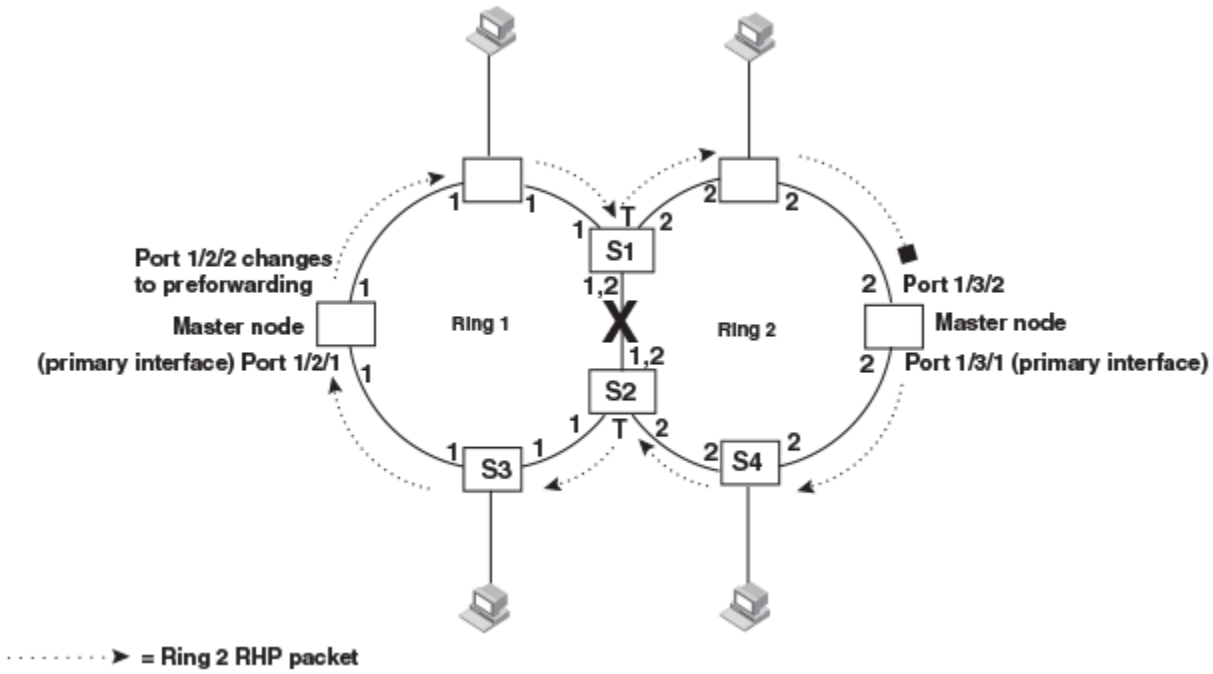

RHP packets follow this flow until the link is restored; then the RHP packet returns to it normal flow as shown in Figure 7 on page 28.

Master VLANs and customer VLANs

All the ring ports must be in the same VLAN. Placing the ring ports in the same VLAN provides Layer 2 connectivity for a given customer across the ring. The following figure shows an example.

FIGURE 10 Metro ring - ring VLAN and customer VLANs

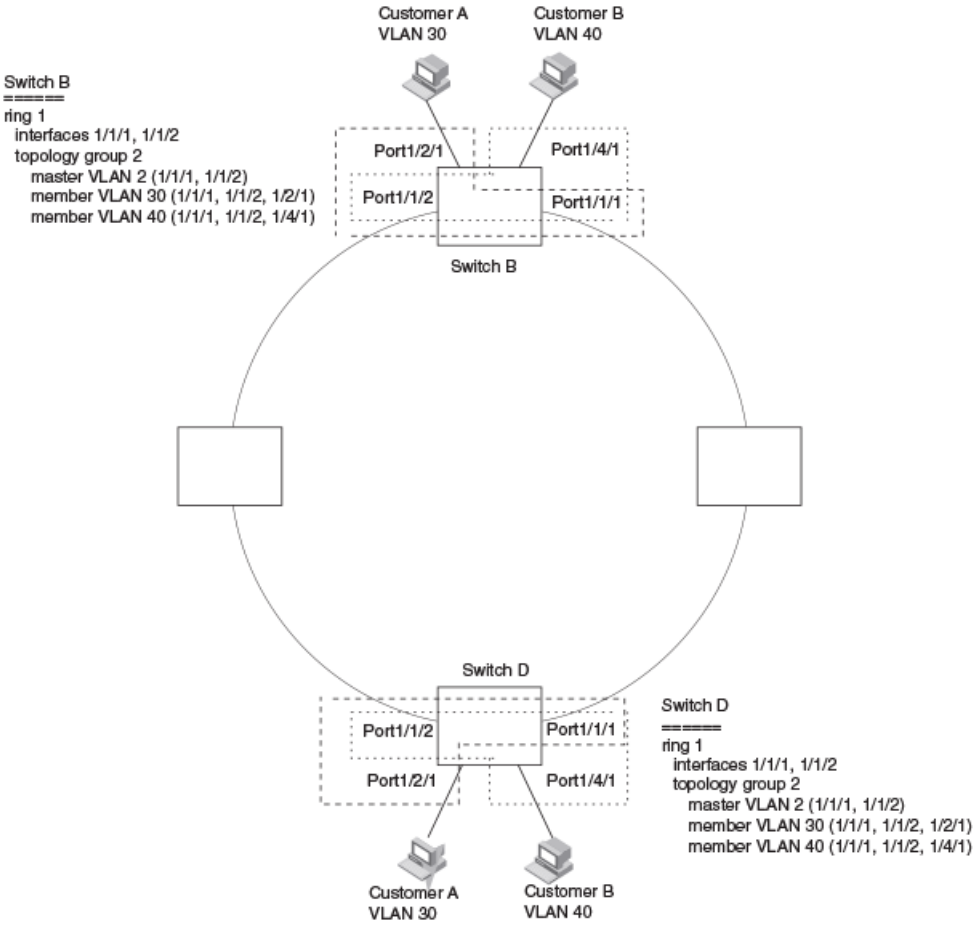

Notice that each customer has their own VLAN. Customer A has VLAN 30 and Customer B has VLAN 40. Customer A host attached to Switch D can reach the Customer A host attached to Switch B at Layer 2 through the ring. Since Customer A and Customer B are on different VLANs, they will not receive each other traffic.

You can configure MRP separately on each customer VLAN. However, this is impractical if you have many customers. To simplify configuration when you have a lot of customers (and therefore a lot of VLANs), you can use a topology group.

A topology group enables you to control forwarding in multiple VLANs using a single instance of a Layer 2 protocol such as MRP. A topology group contains a master VLAN and member VLANs. The master VLAN contains all the configuration parameters for the Layer 2 protocol (STP, MRP, or VSRP). The member VLANs use the Layer 2 configuration of the master VLAN.

In Figure 10, VLAN 2 is the master VLAN and contains the MRP configuration parameters for ring 1. VLAN 30 and VLAN 40, the customer VLANs, are member VLANs in the topology group. Since a topology group is used, a single instance of MRP provides redundancy and loop prevention for both the customer VLANs.

If you use a topology group:

- The master VLAN must contain the ring interfaces. The ports must be tagged, since they will be shared by multiple VLANs.
- The member VLAN for a customer must contain the two ring interfaces and the interfaces for the customer. Since these interfaces are shared with the master VLAN, they must be tagged. Do not add another customer interfaces to the VLAN.

For more information about topology groups, refer to Topology groups on page 277.

Refer to MRP CLI example on page 35 for the configuration commands required to implement the MRP configuration shown in Figure 10.

Metro Ring Protocol configuration

To configure Metro Ring Protocol (MRP), perform the following tasks. You need to perform the first task on only one of the nodes. Perform the remaining tasks on all the nodes.

NOTE
There are no new commands or parameters to configure MRP with shared interfaces (MRP Phase 2).

- Disable one of the ring interfaces. This prevents a Layer 2 loop from occurring while you are configuring the devices for MRP.
- Add an MRP ring to a port-based VLAN. When you add a ring, the CLI changes to the configuration level for the ring, where you can perform the following tasks.
  - Optionally, specify a name for the ring.
  - On the master node only, enable the device to be the master for the ring. Each ring can have only one master node.
  - Specify the MRP interfaces. Each device has two interfaces to an MRP ring.
  - Optionally, change the hello time and the preforwarding time. These parameters control how quickly failover occurs following a change in the state of a link in the ring.
  - Enable the ring.
- Optionally, add the ring VLAN to a topology group to add more VLANs to the ring. If you use a topology group, make sure you configure MRP on the group master VLAN. Refer to Topology groups on page 277.
- Re-enable the interface you disabled to prevent a Layer 2 loop. Once MRP is enabled, MRP will prevent the Layer 2 loop.

Adding an MRP ring to a VLAN

To add an MRP ring to a VLAN, enter commands such as the following.

NOTE
If you plan to use a topology group to add VLANs to the ring, make sure you configure MRP on the topology group master VLAN.

```
device(config)# vlan 2
device(config-vlan-2)# metro-ring 1
device(config-vlan-2-mrp-1)# name CustomerA
device(config-vlan-2-mrp-1)# master
device(config-vlan-2-mrp-1)# ring-interface ethernet 1/1/1 ethernet 1/1/2
device(config-vlan-2-mrp-1)# enable
```

These commands configure an MRP ring on VLAN 2. The ring ID is 1, the ring name is CustomerA, and this node (this RUCKUS device) is the master for the ring. The ring interfaces are 1/1/1 and 1/1/2. Interface 1/1/1 is the primary interface and 1/1/2 is the secondary interface. The primary interface will initiate RHPs by default. The ring takes effect in VLAN 2.

```
device(config)# vlan 2
device(config-vlan-2)# metro-ring 1
device(config-vlan-2-mrp-1)# name CustomerA
device(config-vlan-2-mrp-1)# ring-interface ethernet 1/1/1 ethernet 1/1/2
device(config-vlan-2-mrp-1)# enable
device(config-vlan-2-mrp-1)# metro-ring 2
device(config-vlan-2-mrp-2)# name CustomerB
device(config-vlan-2-mrp-2)# ring-interface ethernet 1/1/1 ethernet 1/1/2
device(config-vlan-2-mrp-2)# enable
```

Enter the **metro-rings** in addition to the **metro-ring** command as shown below to identify the metro rings you want to configure on the VLAN.

```
device(config)# vlan 2
device(config-vlan-2)# metro-rings 1 2
```

```
device(config-vlan-2)# metro-ring 1
device(config-vlan-2-mrp-1)# name CustomerA
device(config-vlan-2-mrp-1)# ring-interface ethernet 1/1/1 ethernet 1/1/2
device(config-vlan-2-mrp-1)# enable
device(config-vlan-2-mrp-1)# metro-ring 2
device(config-vlan-2-mrp-2)# name CustomerB
device(config-vlan-2-mrp-2)# ring-interface ethernet 1/1/1 ethernet 1/1/2
device(config-vlan-2-mrp-2)# enable
```

The **ethernet** *primary-if* parameter specifies the primary interface. On the master node, the primary interface is the one that originates RHPs. Ring control traffic and Layer 2 data traffic will flow in the outward direction from this interface by default. On member nodes, the direction of traffic flow depends on the traffic direction selected by the master node. Therefore, on a member node, the order in which you enter the interfaces does not matter.

The **ethernet** *secondary-if* parameter specifies the secondary interface.

> **NOTE**
> To take advantage of every interface in a Metro network, you can configure another MRP ring and either configure a different Master node for the ring or reverse the configuration of the primary and secondary interfaces on the Master node. Configuring multiple rings enables you to use all the ports in the ring. The same port can forward traffic one ring while blocking traffic for another ring.

The **enable** command enables the ring.

Changing the hello and preforwarding times

You also can change the RHP hello time and preforwarding time. To do so, enter commands such as the following.

```
device(config-vlan-2-mrp-1)# hello-time 200
device(config-vlan-2-mrp-1)# preforwarding-time 400
```

These commands change the hello time to 200 ms and change the preforwarding time to 400 ms.

The *ms* specifies the number of milliseconds. For the hello time, you can specify from 100 - 1000 (one second). The default hello time is 100 ms. The preforwarding time can be from 200 - 5000 ms, but must be at least twice the value of the hello time and must be a multiple of the hello time. The default preforwarding time is 300 ms. A change to the hello time or preforwarding time takes effect as soon as you enter the command.

Configuration notes for changing the hello and preforwarding times

- The preforwarding time must be at least twice the value of the hello time and must be a multiple of the hello time.
- If UDLD is also enabled on the device, RUCKUS recommends that you set the MRP preforwarding time slightly higher than the default of 300 ms; for example, to 400 or 500 ms.
- You can use MRP ring diagnostics to determine whether you need to change the hello time and preforwarding time. Refer to Metro Ring Protocol diagnostics on page 33.

Metro Ring Protocol diagnostics

The Metro Ring Protocol (MRP) diagnostics feature calculates how long it takes for RHP packets to travel through the ring. When you enable MRP diagnostics, the software tracks RHP packets according to their sequence numbers and calculates how long it takes an RHP packet to travel one time through the entire ring. When you display the diagnostics, the CLI shows the average round-trip time for the RHP packets sent since you enabled diagnostics. The calculated results have a granularity of 1 microsecond.

Enabling MRP diagnostics

To enable MRP diagnostics for a ring, enter the following command on the Master node, at the configuration level for the ring.

```
device(config-vlan-2-mrp-1)# diagnostics
```

NOTE
This command is valid only on the master node.

Displaying MRP diagnostics

To display MRP diagnostics results, enter the following command on the Master node.

```
device# show metro-ring 1 diagnostics

Metro Ring 1 - CustomerA
=============
diagnostics results
Ring       Diag       RHP average     Recommended     Recommended
id         state      time(microsec)  hello time(ms)  Prefwing time(ms)
2          enabled    125             100             300
Diag frame sent     Diag frame lost
1230                0
```

The table below explains the fields in the display.

TABLE 5 CLI display of MRP ring diagnostic information

Field	Description
Ring id	The ring ID.
Diag state	The state of ring diagnostics.
RHP average time	The average round-trip time for an RHP packet on the ring. The calculated time has a granularity of 1 microsecond.
Recommended hello time	The hello time recommended by the software based on the RHP average round-trip time.
Recommended Prefwing time	The preforwarding time recommended by the software based on the RHP average round-trip time.
Diag frame sent	The number of diagnostic RHPs sent for the test.
Diag frame lost	The number of diagnostic RHPs lost during the test.

If the recommended hello time and preforwarding time are different from the actual settings and you want to change them, refer to Metro Ring Protocol configuration on page 32.

Displaying MRP information

You can display the following MRP information:

- Topology group configuration information
- Ring configuration information and statistics

Topology group configuration information

To display topology group information, enter the **show topology-group** command. Refer toDisplaying topology group information on page 280 for more information.

Ring configuration information and statistics

To display ring information, enter the **show metro-ring** command.

```
device# show metro-ring

Metro Ring 1
=============
Ring       State     Ring       Master     Topo       Hello      Prefwing
id                   role       vlan       group      time(ms)   time(ms)
2          enabled   member     2          not conf   100        300
Ring interfaces    Interface role     Forwarding state    Active interface    Interface Type
ethernet 1/1/1       primary            disabled            none                Regular
ethernet 1/1/2       secondary          forwarding          ethernet 2          Tunnel
RHPs sent          RHPs rcvd          TC RHPs rcvd        State changes
3                    0                  0                   4
```

MRP CLI example

The following examples show the CLI commands required to implement the MRP configuration shown in Figure 10 on page 31.

NOTE
For simplicity, the figure shows the VLANs on only two switches. The CLI examples implement the ring on all four switches.

MRP commands on Switch A (master node)

The following commands configure a VLAN for the ring. The ring VLAN must contain both of the node interfaces with the ring. Add these interfaces as tagged interfaces, since the interfaces also must be in each of the customer VLANs configured on the node.

```
device(config)#vlan 2
device(config-vlan-2)#tag ethernet 1/1/1 to 1/1/2
device(config-vlan-2)#metro-ring 1
device(config-vlan-2-mrp-1)#name "Metro A"
device(config-vlan-2-mrp-1)#master
device(config-vlan-2-mrp-1)#ring-interface ethernet 1/1/1 ethernet 1/1/2
device(config-vlan-2-mrp-1)#enable
device(config-vlan-2-mrp-1)#exit
device(config-vlan-2)#exit
```

The following commands configure the customer VLANs. The customer VLANs must contain both the ring interfaces as well as the customer interfaces.

```
device(config)#vlan 30
device(config-vlan-30)#tag ethernet 1/1/1 to 1/1/2
device(config-vlan-30)#tag ethernet 1/2/1
device(config-vlan-30)#exit
device(config)#vlan 40
device(config-vlan-40)#tag ethernet 1/1/1 to 1/1/2
device(config-vlan-40)#tag ethernet 1/4/1
device(config-vlan-40)#exit
```

The following commands configure topology group 1 on VLAN 2. The master VLAN is the one that contains the MRP configuration. The member VLANs use the MRP parameters of the master VLAN. The control interfaces (the ones shared by the master VLAN and member VLAN) also share MRP state.

```
device(config)#topology-group 1
device(config-topo-group-1)#master-vlan 2
device(config-topo-group-1)#member-vlan 30
device(config-topo-group-1)#member-vlan 40
```

MRP commands on Switch B

The commands for configuring Switches B, C, and D are similar to the commands for configuring Switch A, with two differences: the nodes are not configured to be the ring master. Omitting the **master** command is required for non-master nodes.

```
device(config)#vlan 2
device(config-vlan-2)#tag ethernet 1/1/1 to 1/1/2
device(config-vlan-2)#metro-ring 1
device(config-vlan-2-mrp-1)#name "Metro A"
device(config-vlan-2-mrp-1)#ring-interface ethernet 1/1/1 ethernet 1/1/2
device(config-vlan-2-mrp-1)#enable
device(config-vlan-2)#exit
device(config)#vlan 30
device(config-vlan-30)#tag ethernet 1/1/1 to 1/1/2
device(config-vlan-30)#tag ethernet 1/2/1
device(config-vlan-30)#exit
device(config)#vlan 40
device(config-vlan-40)#tag ethernet 1/1/1 to 1/1/2
device(config-vlan-40)#tag ethernet 1/4/1
device(config-vlan-40)#exit
device(config)#topology-group 1
device(config-topo-group-1)#master-vlan 2
device(config-topo-group-1)#member-vlan 30
device(config-topo-group-1)#member-vlan 40
```

MRP commands on Switch C

```
device(config)#vlan 2
device(config-vlan-2)#tag ethernet 1/1/1 to 1/2
device(config-vlan-2)#metro-ring 1
device(config-vlan-2-mrp-1)#name "Metro A"
device(config-vlan-2-mrp-1)#ring-interface ethernet 1/1/1 ethernet 1/1/2
device(config-vlan-2-mrp-1)#enable
device(config-vlan-2)#exit
device(config)#vlan 30
device(config-vlan-30)#tag ethernet 1/1/1 to 1/1/2
device(config-vlan-30)#tag ethernet 1/2/1
device(config-vlan-30)#exit
device(config)#vlan 40
device(config-vlan-40)#tag ethernet 1/1/1 to 1/1/2
device(config-vlan-40)#tag ethernet 1/4/1
device(config-vlan-40)#exit
device(config)#topology-group 1
device(config-topo-group-1)#master-vlan 2
device(config-topo-group-1)#member-vlan 30
device(config-topo-group-1)#member-vlan 40
```

MRP commands on Switch D

```
device(config)#vlan 2
device(config-vlan-2)#tag ethernet 1/1/1 to 1/1/2
device(config-vlan-2)#metro-ring 1
device(config-vlan-2-mrp-1)#name "Metro A"
device(config-vlan-2-mrp-1)#ring-interface ethernet 1/1/1 ethernet 1/1/2
```

```
device(config-vlan-2-mrp-1)#enable
device(config-vlan-2)#exit
device(config)#vlan 30
device(config-vlan-30)#tag ethernet 1/1/1 to 1/1/2
device(config-vlan-30)#tag ethernet 1/2/1
device(config-vlan-30)#exit
device(config)#vlan 40
device(config-vlan-40)#tag ethernet 1/1/1 to 1/1/2
device(config-vlan-40)#tag ethernet 1/4/1
device(config-vlan-40)#exit
device(config)#topology-group 1
device(config-topo-group-1)#master-vlan 2
device(config-topo-group-1)#member-vlan 30
device(config-topo-group-1)#member-vlan 40
```

Virtual Switch Redundancy Protocol (VSRP)

- VSRP overview....39
- VSRP configuration notes and feature limitations....41
- VSRP redundancy....41
- Master election and failover....41
- VSRP interval timers....46
- Configuring device redundancy using VSRP....46
- Configuring optional VSRP parameters....47
- Configuring authentication on VSRP interfaces....48
- Tracking ports and setting the VSRP priority....49
- Disabling backup pre-emption setting....50
- VSRP-aware security features....51
- VSRP fast start....52
- VSRP and MRP signaling....53

VSRP overview

Virtual Switch Redundancy Protocol (VSRP) is a RUCKUS proprietary protocol that provides redundancy and sub-second failover in Layer 2 and Layer 3 mesh topologies. Based on the RUCKUS Virtual Router Redundancy Protocol Extended (VRRP-E), VSRP provides one or more backups for a device. If the active device becomes unavailable, one of the backups takes over as the active device and continues forwarding traffic for the network.

RUCKUS switches support full VSRP as well as VSRP-awareness . A RUCKUS device that is not itself configured for VSRP but is connected to a RUCKUS device that is configured for VSRP, is considered to be VSRP aware.

You can use VSRP for Layer 2, Layer 3, or for both layers. On Layer 3 devices, Layer 2 and Layer 3 share the same VSRP configuration information.

The following example shows an example of a VSRP configuration.

FIGURE 11 VSRP mesh - redundant paths for the traffic

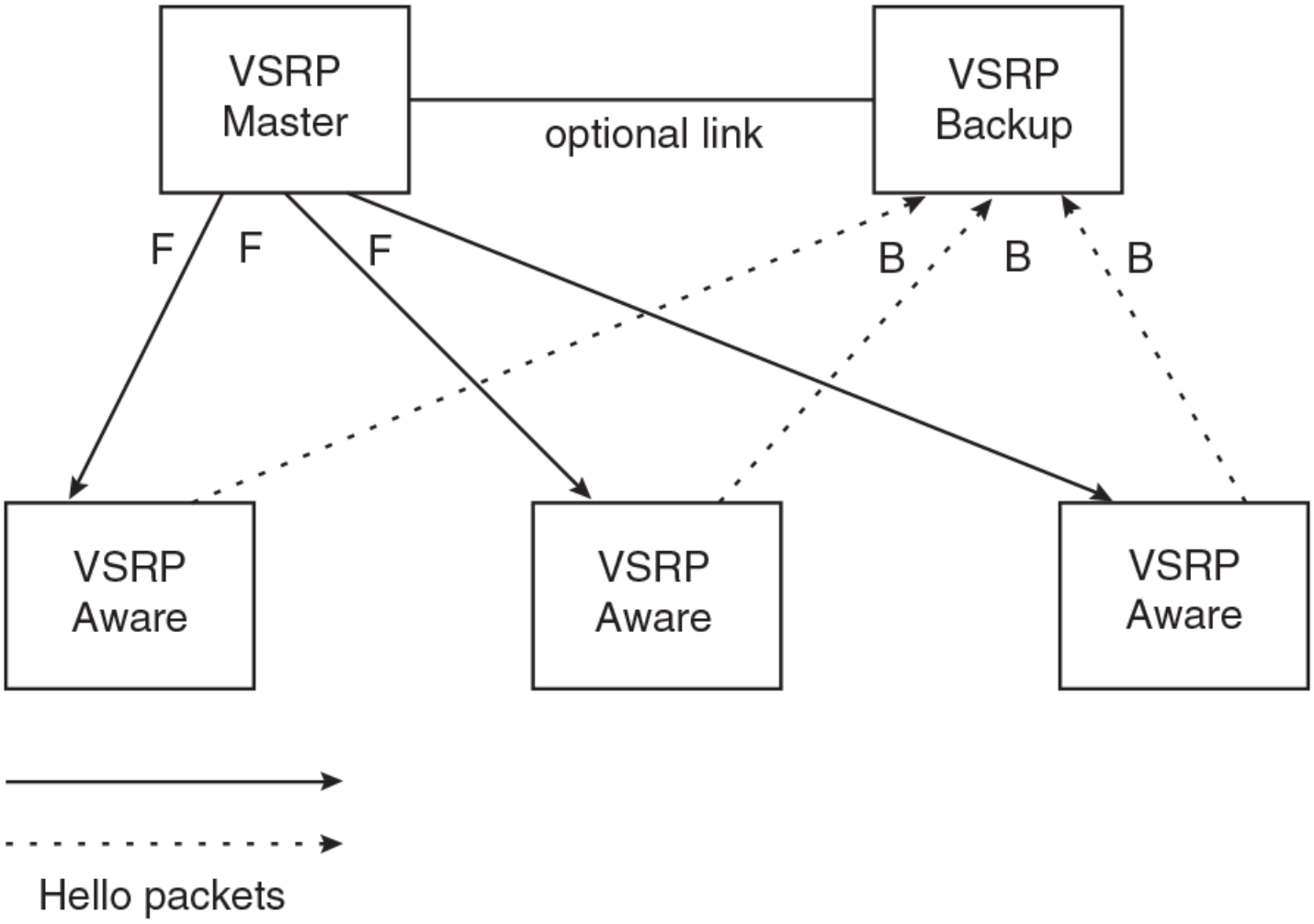

In this example, two RUCKUS devices are configured as redundant paths for VRID 1. On each of the devices, a Virtual Router ID (VRID) is configured on a port-based VLAN. Since VSRP is primarily a Layer 2 redundancy protocol, the VRID applies to the entire VLAN. However, you can selectively remove individual ports from the VRID if needed.

Following Master election (described below), one of the RUCKUS devices becomes the Master for the VRID and sets the state of all the VLAN ports to Forwarding. The other device is a Backup and sets all the ports in its VRID VLAN to Blocking.

If a failover occurs, the Backup becomes the new Master and changes all its VRID ports to the Forwarding state.

> **NOTE**
> The link between VSRP Master and VSRP Backup is "optional" in the above diagram. However, if the VSRP-aware device is a RUCKUS ICX device, this link is required and recommended. This is due to the need for interoperability between devices of these two platforms having different default timers. The link between the VSRP Master and Backup guarantees that the VSRP Hello message is flowing between the VSRP Master and the VSRP Standby directly to cause VSRP transition instead of relying on VSRP-Aware devices to forward and risk missing the VSRP Hello message.

Other RUCKUS devices can use the redundant paths provided by the VSRP devices. In this example, three RUCKUS devices use the redundant paths. A RUCKUS device that is not itself configured for VSRP but is connected to a RUCKUS device that is configured for VSRP, is VSRP aware . In this

example, the three RUCKUS devices connected to the VSRP devices are VSRP aware. A RUCKUS device that is VSRP aware can failover its link to the new Master in sub-second time, by changing the MAC address associated with the redundant path.

When you configure VSRP, make sure each of the non-VSRP RUCKUS devices connected to the VSRP devices has a separate link to each of the VSRP devices.

VSRP configuration notes and feature limitations

- VSRP and 802.1Q-n-Q tagging are not supported together on the same device.
- VSRP and Super Aggregated VLANs are not supported together on the same device.
- The VLAN supports IGMP snooping version 2 and version 3 when VSRP or VSRP-aware is configured on a VLAN.

VSRP redundancy

You can configure VSRP to provide redundancy for Layer 2 and Layer 3:

- Layer 2 only - The Layer 2 links are backed up but specific IP addresses are not backed up.
- Layer 2 and Layer 3 - The Layer 2 links are backed up and a specific IP address is also backed up. Layer 3 VSRP is the same as VRRP-E. However, using VSRP provides redundancy at both layers at the same time.

The RUCKUS ICX device supports Layer 2 and Layer 3 redundancy. You can configure a device for either Layer 2 only or Layer 2 and Layer 3. To configure for Layer 3, specify the IP address you are backing up.

> **NOTE**
> If you want to provide Layer 3 redundancy only, disable VSRP and use VRRP-E.

Master election and failover

Each VSRP device advertises its VSRP priority in Hello messages. During Master election, the VSRP device with the highest priority for a given VRID becomes the Master for that VRID. After Master election, the Master sends Hello messages at regular intervals to inform the Backups that the Master is healthy.

If there is a tie for highest VSRP priority, the tie is resolved as follows:

- Layer 2 devices - The Layer 2 Switch with the higher management IP address becomes the Master.
  - Device with management IP addresses are preferred over switches without management IP addresses.
  - If neither of the switches has a management IP address, then the device with the higher MAC address becomes the Master. (VSRP compares the MAC addresses of the ports configured for the VRID, not the base MAC addresses of the devices.)
- Layer 3 devices - The Layer 3 device whose virtual routing interface has a higher IP address becomes the master.

VSRP failover

Each Backup listens for Hello messages from the Master. The Hello messages indicate that the Master is still available. If the Backups stop receiving Hello messages from the Master, the election process occurs again and the Backup with the highest priority becomes the new Master.

Each Backup waits for a specific period of time, the Dead Interval, to receive a new Hello message from the Master. If the Backup does not receive a Hello message from the Master by the time the Dead Interval expires, the Backup sends a Hello message of its own, which includes the Backup's

VSRP priority, to advertise the Backup's intent to become the Master. If there are multiple Backups for the VRID, each Backup sends a Hello message.

When a Backup sends a Hello message announcing its intent to become the Master, the Backup also starts a hold-down timer. During the hold-down time, the Backup listens for a Hello message with a higher priority than its own.

- If the Backup receives a Hello message with a higher priority than its own, the Backup resets its Dead Interval and returns to normal Backup status.
- If the Backup does not receive a Hello message with a higher priority than its own by the time the hold-down timer expires, the Backup becomes the new Master and starts forwarding Layer 2 traffic on all ports.

If you increase the timer scale value, each timer value is divided by the scale value. To achieve sub-second failover times, you can change the scale to a value up to 10. This shortens all the VSRP timers to 10 percent of their configured values.

VSRP priority calculation

Each VSRP device has a VSRP priority for each VRID and its VLAN. The VRID is used during Master election for the VRID. By default, a device VSRP priority is the value configured on the device (which is 100 by default). However, to ensure that a Backup with a high number of up ports for a given VRID is elected, the device reduces the priority if a port in the VRID VLAN goes down. For example, if two Backups each have a configured priority of 100, and have three ports in VRID 1 in VLAN 10, each Backup begins with an equal priority, 100. This is shown in the following figure.

FIGURE 12 VSRP priority

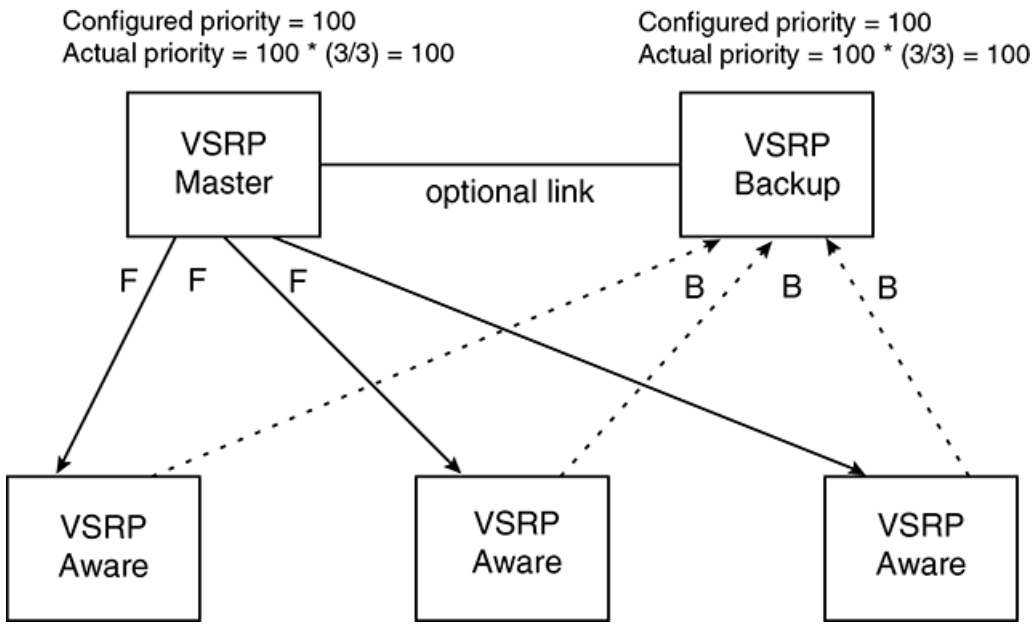

However, if one of the VRID ports goes down on one of the Backups, that Backup priority is reduced. If the Master priority is reduced enough to make the priority lower than a Backup priority, the VRID fails over to the Backup. The following figure shows an example.

FIGURE 13 VSRP priority recalculation

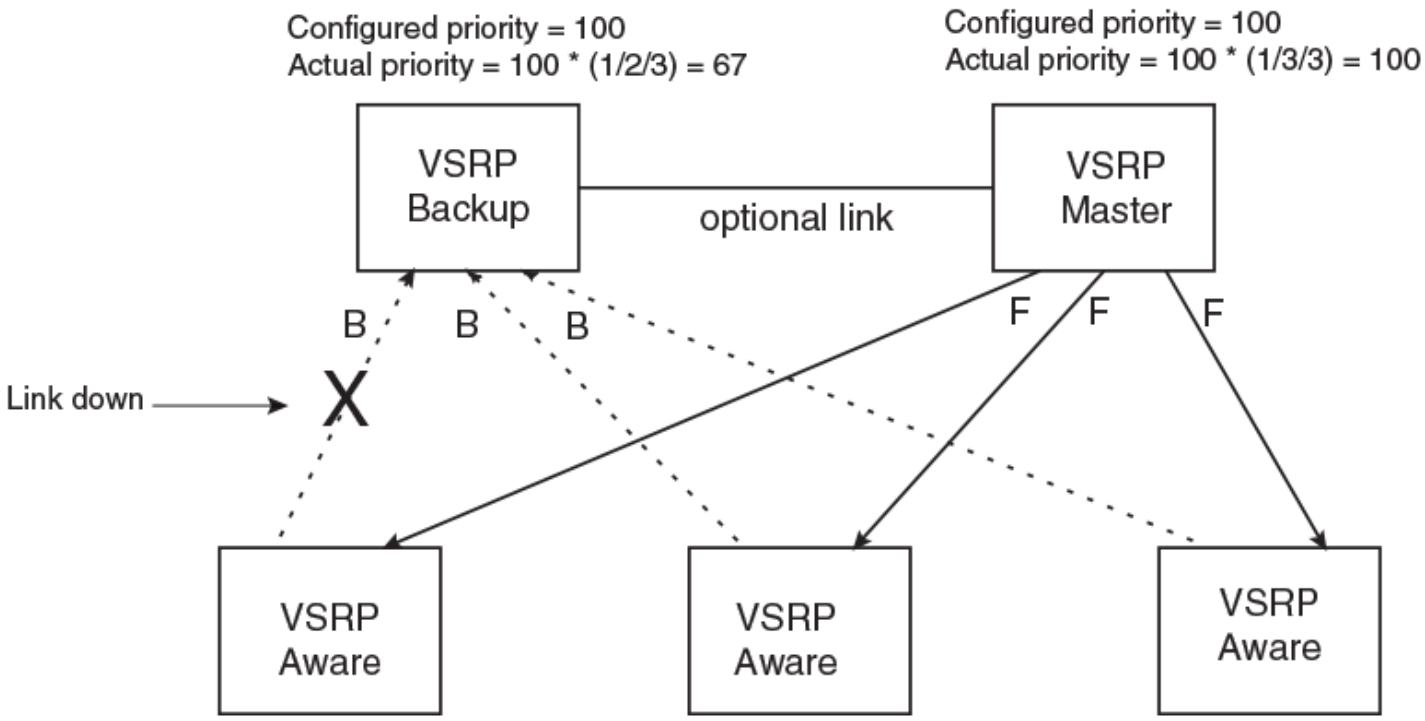

You can reduce the sensitivity of a VSRP device to failover by increasing its configured VSRP priority. For example, you can increase the configured priority of the VSRP device on the left in Figure 13 to 150. In this case, failure of a single link does not cause failover. The link failure caused the priority to be reduced to 100, which is still equal to the priority of the other device. This is shown in the following figure.

FIGURE 14 VSRP priority bias

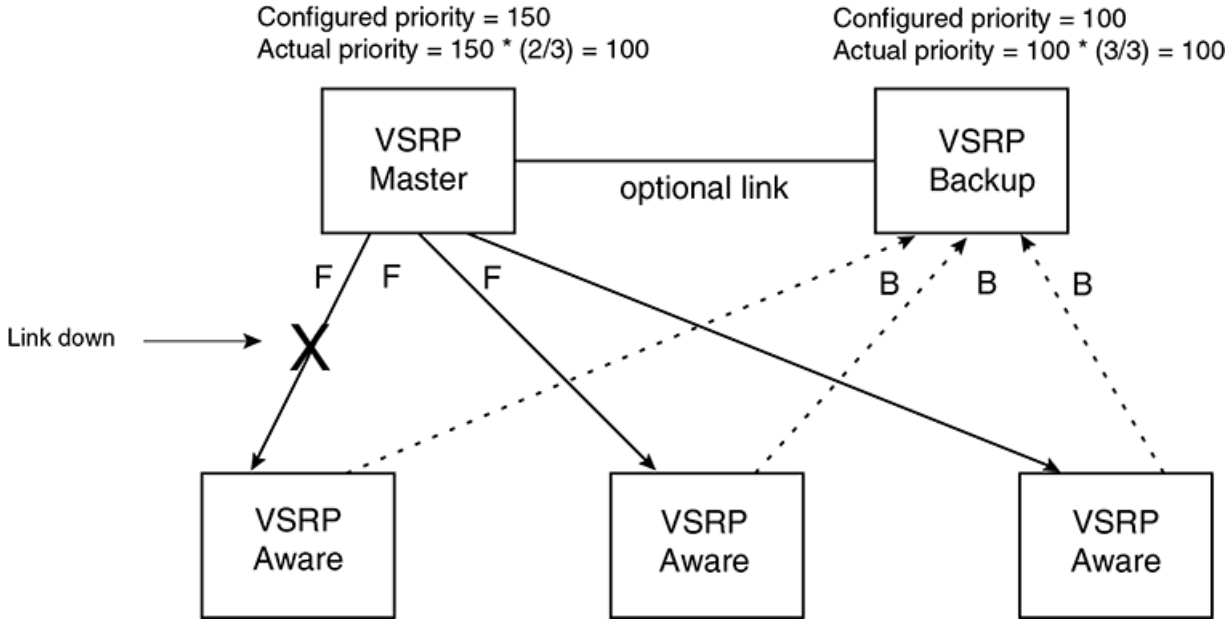

Track ports

Optionally, you can configure track ports to be included during VSRP priority calculation. In VSRP, a track port is a port that is not a member of the VRID VLAN, but whose state is nonetheless considered when the priority is calculated. Typically, a track port represents the exit side of traffic received on the VRID ports. By default, no track ports are configured.

When you configure a track port, you assign a priority value to the port. If the port goes down, VSRP subtracts the track port priority value from the configured VSRP priority. For example, if the you configure a track port with priority 20 and the configured VSRP priority is 100, the software subtracts 20 from 100 if the track port goes down, resulting in a VSRP priority of 80. The new priority value is used when calculating the VSRP priority. The following figure shows an example.

FIGURE 15 Track port priority

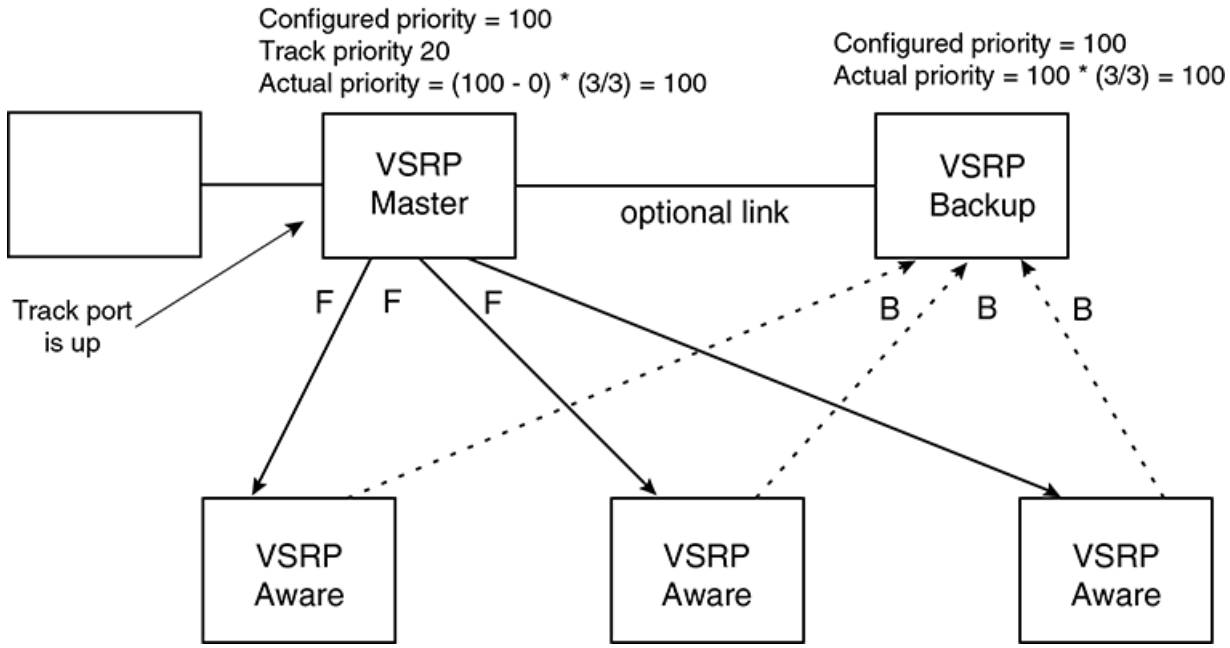

In Figure 15, the track port is up. SInce the port is up, the track priority does not affect the VSRP priority calculation. If the track port goes down, the track priority does affect VSRP priority calculation, as shown in the following figure.

FIGURE 16 Track port priority subtracted during priority calculation

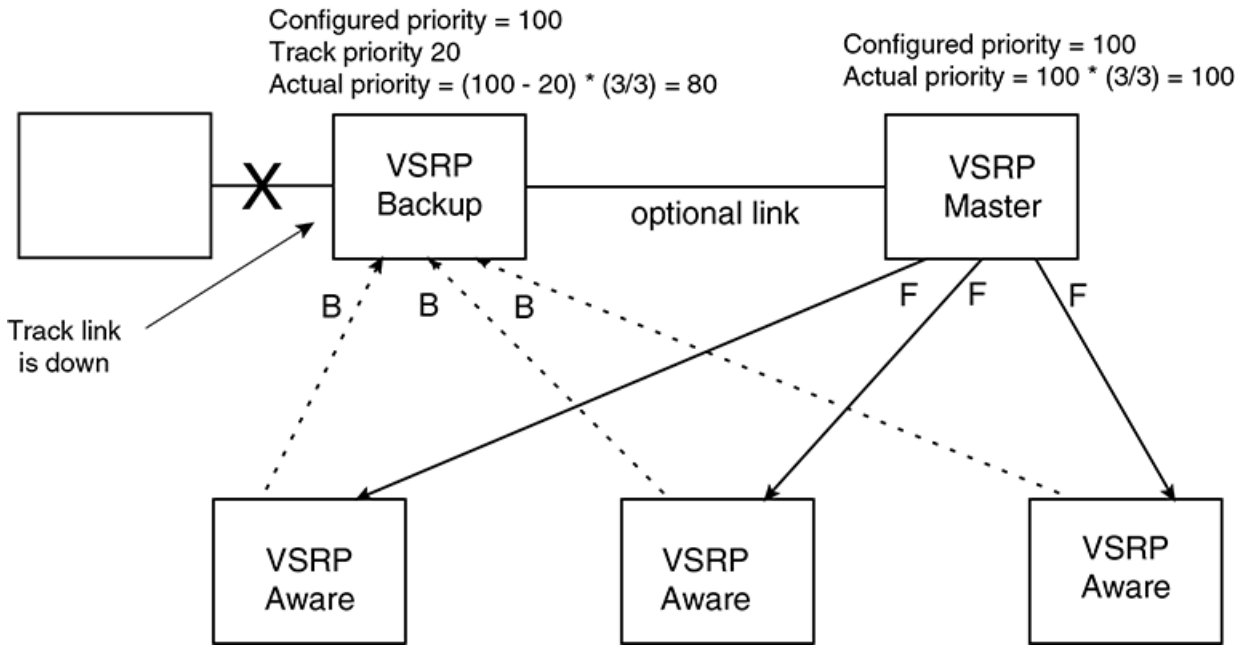

MAC address failover on VSRP-aware devices

VSRP-aware devices maintain a record of each VRID and its VLAN. When the device has received a Hello message for a VRID in a given VLAN, the device creates a record for that VRID and VLAN and includes the port number in the record. Each subsequent time the device receives a Hello message for the same VRID and VLAN, the device checks the port number:

- If the port number is the same as the port that previously received a Hello message, the VSRP-aware device assumes that the message came from the same VSRP Master that sent the previous message.
- If the port number does not match, the VSRP-aware device assumes that a VSRP failover has occurred to a new Master, and moves the MAC addresses learned on the previous port to the new port.

The VRID records age out if unused. This can occur if the VSRP-aware device becomes disconnected from the Master. The VSRP-aware device will wait for a Hello message for the period of time equal to the following.

VRID Age = Dead Interval + Hold-down Interval + (3 x Hello Interval)

The values for these timers are determined by the VSRP device sending the Hello messages. If the Master uses the default timer values, the age time for VRID records on the VSRP-aware devices is as follows.

3 + 3 + (3 x 1) = 9 seconds

In this case, if the VSRP-aware device does not receive a new Hello message for a VRID in a given VLAN, on any port, the device assumes the connection to the Master is unavailable and removes the VRID record.

VSRP interval timers

The VSRP Hello interval, Dead interval, Backup Hello interval, and Hold-down interval timers are individually configurable. You also can easily change all the timers at the same time while preserving the ratios among their values. To do so, change the timer scale. The *timer scale* is a value used by the software to calculate the timers. The software divides a timer value by the timer scale value. By default, the scale is 1. This means the VSRP timer values are the same as the values in the configuration.

Configuring device redundancy using VSRP

Virtual Switch Redundancy Protocol (VSRP) provides device redundancy for specific ports in a port-based VLAN. Configuring VSRP device redundancy in your network leads to faster failover times if an interface goes offline.

VSRP is enabled after assigning a Virtual Routing ID (VRID) on specific ports in a port-based VLAN and setting a backup priority for the device. Repeat this task on each device selected for VSRP redundancy.

NOTE
VSRP is enabled by default on RUCKUS devices, but may be disabled if Virtual Router Redundancy Protocol (VRRP) or VRRP Extended (VRRP-E) is currently enabled.

1. On any device on which you want to configure VSRP service, from privileged EXEC mode, enter global configuration mode by issuing the **configure terminal** command.

   ```
   device# configure terminal
   ```

2. Optionally, globally enable the VSRP protocol.

   This is required only if VSRP was disabled earlier and you want to re-enable it.

   ```
   device(config)# router vsrp
   ```

3. Configure a VLAN by assigning an ID to the VLAN.

   ```
   device(config)# vlan 200
   ```

4. Configure the interfaces on which VSRP service is to be enabled by adding ports to the VLAN.

   ```
   device(config-vlan-200)# tagged ethernet 1/1/1 to 1/1/8
   ```

   In this example, a range of tagged Ethernet interfaces is configured.

5. Assign a VSRP VRID to the VLAN.

   ```
   device(config-vlan-200)# vsrp vrid 1
   ```

6. (Optional) Add additional ports to the VSRP instance.

   ```
   device(config-vlan-200-vrid-1)# include-port ethernet 1/1/10
   ```

7. (Optional) Configure VRID IP address if you are configuring Layer 3 redundancy.

   ```
   device(config-vlan-200-vrid-1)# ip-address 10.10.10.1
   ```

   VSRP does not require you to specify an IP address. If you do not specify an address, VSRP provides Layer 2 redundancy. If you specify an IP address, VSRP provides Layer 2 and Layer 3 redundancy.

8. Designate this device as a backup VSRP device with a priority higher than the default priority.

```
device(config-vlan-200-vrid-1)# backup priority 110
```

   The priority is used to determine the initial VSRP master device. If a VSRP master device goes offline, the backup device with the highest priority will assume the role of master device.

9. Enable a backup router to send hello messages to the master VSRP device.

```
device(config-vlan-200-vrid-1)# advertise backup
```

   By default, backup VSRP devices do not send hello messages to advertise themselves to the master.

10. Enable the VRRP session.

    You can also use the **enable** command to enable the VRRP session.

```
device(config-vlan-200-vrid-1)# activate
```

11. Return to privileged EXEC mode.

```
device(config-vlan-200-vrid-1)# end
```

12. Display VSRP information about the VRID to verify the configuration steps in this task.

```
device# show vsrp vrid 1

Total number of VSRP routers defined: 2
VLAN 200
auth-type no authentication
VRID 1
State    Administrative-status  Advertise-backup  Preempt-mode  save-current
standby  enabled                disabled          true          false

Parameter      Configured   Current   Unit
priority       110          80        (100-0)*(4.0/5.0)
hello-interval 10           1         sec/1
dead-interval  10           3         sec/1
hold-interval  3            3         sec/1
initial-ttl    5            5         hops
next hello sent in 00:00:00.8
Member ports: ethe 1/1/1 to 1/1/8
Operational ports: ethe 1/1/1 to 1/1/6
Forwarding ports:  ethe 1/1/1 to 1/1/6
```

    This is an optional step. Before entering the **show vsrp vrid** command, you may need to activate several VSRP backup devices.

The following example configures VSRP service for VRID 1 on Ethernet interfaces 1/1/1 to 1/1/8 of VLAN 200.

```
device# configure terminal
device(config)# router vsrp
device(config)# vlan 200
device(config-vlan-200)# tagged ethernet 1/1/1 to 1/1/8
device(config-vlan-200)# vsrp vrid 1
device(config-vlan-200-vrid-1)# backup priority 110
device(config-vlan-200-vrid-1)# advertise backup
device(config-vlan-200-vrid-1)# activate
device(config-vlan-200-vrid-1)# end
device# show vsrp vrid 1
```

Configuring optional VSRP parameters

You can configure several optional VSRP parameters.

VSRP is configured and enabled.

VSRP is enabled after assigning a Virtual Routing ID (VRID) on specific ports in a port-based VLAN and setting a backup priority for the device. You can configure a number of optional parameters once VSRP is enabled.

NOTE
VSRP is enabled by default on RUCKUS devices, but may be disabled if Virtual Router Redundancy Protocol (VRRP) or VRRP Extended (VRRP-E) is currently enabled.

NOTE
All the steps in this section are optional.

1. On any device on which you want to configure, from privileged EXEC mode, enter global configuration mode by issuing the **configure terminal** command.

   ```
   device# configure terminal
   ```

2. Configure a VLAN by assigning an ID to the VLAN.

   ```
   device(config)# vlan 200
   ```

3. Assign a VSRP VRID to the VLAN.

   ```
   device(config-vlan-200)# vsrp vrid 1
   ```

4. Configure a Backup to save the VSRP timer values received from the Master instead of the timer values configured on the Backup.

   ```
   device(config-vlan-200-vrid-1)# save-current-values
   ```

5. Configure how many hops the packet can traverse before being dropped.

   ```
   device(config-vlan-200-vrid-1)# initial-ttl 5
   ```

6. Configure the number of seconds between hello messages from the master to the backups for a given VRID.

   ```
   device(config-vlan-200-vrid-1)# hello-interval 10
   ```

7. Configure the number of seconds a Backup waits for a Hello message from the Master before determining that the Master is offline.

   ```
   device(config-vlan-200-vrid-1)# dead-interval 15
   ```

8. Configure the interval for the backup to send hello messages to the master when the advertisement is enabled.

   ```
   device(config-vlan-200-vrid-1)# backup-hello-interval 180
   ```

9. Change the hold-down time interval.

   The hold-down interval prevents Layer 2 loops from occurring during failover, by delaying the new Master from forwarding traffic long enough to ensure that the failed Master is really unavailable.

   ```
   device(config-vlan-200-vrid-1)# hold-down-interval 4
   ```

Configuring authentication on VSRP interfaces

If the interfaces on which you configure the VRID use authentication, the VSRP packets on those interfaces also must use the same authentication.

A VSRP session must be configured and running.

If you configure your device interfaces to use a simple password to authenticate traffic, VSRP interfaces can be configured with the same simple password, and VSRP packets that do not contain the password are dropped. If your interfaces do not use authentication, neither does VSRP. Repeat this task on all interfaces on all devices that support the VRID.

1. From privileged EXEC mode, enter global configuration mode.

```
device# configure terminal
```

2. Configure the VLAN on which a VSRP VRID is assigned.

```
device(config)# vlan 100
```

3. Enter the simple text password configuration.

```
device(config-vlan-100)# vsrp auth-type simple-text-auth ourpword
```

4. Verify the password.

```
device(config-vlan-200)# show vsrp
VLAN 200
 auth-type simple text password
 VRID 1
 ========
  State      Administrative-status Advertise-backup Preempt-mode save-current
  initialize enabled               enabled          true         false

  Parameter        Configured Current    Unit/Formula
  priority         100        0          (100-0)*(0.0/1.0)
  hello-interval   1          1          sec/1
  dead-interval    3          3          sec/1
  hold-interval    3          3          sec/1
  initial-ttl      2          2          hops

  Member ports:      ethe 1/1/1
  Operational ports: None
  Forwarding ports:  None
  Restart ports:     None
```

Tracking ports and setting the VSRP priority

Configuring port tracking on an exit path interface and setting a priority on a VSRP device enables VSRP to monitor the interface. If the interface goes down, the VRID's VSRP priority is reduced by the amount of the track port priority you specify.

This capability is useful for tracking the state of the exit interface for the path for which the VRID is providing redundancy

1. Enter the global configuration mode.

```
device# configure terminal
```

2. Optionally, globally enable VSRP.

```
device(config)# router vsrp
```

3. Configure a VLAN by assigning an ID to the VLAN.

```
device(config)# vlan 200
```

4. Configure the interfaces on which VSRP service is to be enabled by adding ports to the VLAN.

```
device(config-vlan-200)# tagged ethernet 1/1/1 to 1/1/8
```

5. Assign a VSRP VRID to the VLAN.

```
device(config-vlan-200)# vsrp vrid 1
```

6. Configure the track port and priority.

```
device(config-vlan-200-vrid-1)# track-port ethernet 1/2/4 priority 4
```

   The priority value is used when a tracked port goes down and the new priority is set to this value. Ensure that the priority value is lower than the priority set for any existing master or backup device to force a renegotiation for the master device.

Disabling backup pre-emption setting

By default, a Backup that has a higher priority than another Backup that has become the Master can preempt the Master, and take over the role of Master. If you want to prevent this behavior, disable preemption.

Preemption applies only to Backups and takes effect only when the Master has failed and a Backup has assumed ownership of the VRID. The feature prevents a Backup with a higher priority from taking over as Master from another Backup that has a lower priority but has already become the Master of the VRID.

Preemption is especially useful for preventing flapping in situations where there are multiple Backups and a Backup with a lower priority than another Backup has assumed ownership, because the Backup with the higher priority was unavailable when ownership changed.

If you enable the non-preempt mode (thus disabling the preemption feature) on all the Backups, the Backup that becomes the Master following the disappearance of the Master continues to be the Master. The new Master is not preempted.

Disabling VSRP backup preemption

VRRP backup preemption prevents a Backup with a higher priority from taking over as Master from another Backup that has a lower priority but has already become the Master of the VRID.

A VSRP session must be globally enabled using the **router vsrp** command in global configuration mode.

1. Configure a VLAN by assigning an ID to the VLAN.

```
device(config)# vlan 200
```

2. Configure the interfaces on which VSRP service is to be enabled by adding ports to the VLAN.

```
device(config-vlan-200)# tagged ethernet 1/1/1 to 1/1/8
```

3. Assign a VSRP VRID to the VLAN.

```
device(config-vlan-200)# vsrp vrid 1
```

4. Disable preemption on a Backup.

```
device(config-vlan-200-vrid-1)# non-preempt-mode
```

VSRP-aware security features

This feature protects against unauthorized VSRP hello packets by enabling you to configure VSRP-aware security parameters. Without VSRP-aware security, a VSRP-aware device passively learns the authentication method conveyed by the received VSRP hello packet. The VSRP-aware device then stores the authentication method until it ages out with the aware entry.

The VSRP-aware security feature enables you to perform the following:

- Define the specific authentication parameters that a VSRP-aware device will use on a VSRP backup switch. The authenticaiton parameters that you define will not age out.
- Define a list of ports that have authentic VSRP backup switch connections. For ports included in the list, the VSRP-aware switch will process VSRP hello packets using hte VSRP-aware security configuration. Conversely, for ports not included in the list, the VSRP-aware switch will not use the VSRP-aware security processing.

Of the hello packets do not meet the acceptance criteria, the VSRP-aware device forwards the packets normally, without any VSRP-aware security processing.

Configuring security parameters on a VSRP-aware device

VSRP-aware security parameters protects against unauthorized VSRP hello packets.

VSRP is configured on the device.

Without VSRP-aware security, a VSRP-aware device passively learns the authentication method conveyed by the received VSRP hello packet. The VSRP-aware device then stores the authentication method until it ages out with the aware entry.

1. From global configuration mode, configure a VLAN by assigning an ID to the VLAN

   ```
   device(config)# vlan 200
   ```

2. Specify an authentication string for VSRP hello packets.

   ```
   device(config-vlan-200)# vsrp-aware vrid 3 simple-text-auth pri-key
   ```

3. Configure the device to flush MAC addresses at the VLAN level instead at the port level. MAC address will be flushed for every topology change received on the VSRP-aware ports.

   This configuration should be used in network in which the RUCKUS switch operates as the VSRP-aware device connecting to other device configured as a VSRP Master. MAC address

   ```
   device(config-vlan-200)# VSRP-aware vrid 3 tc-vlan-flush
   ```

4. Verify the configuration using the **show vsrp-aware vlan** command.

   ```
   device(config-vlan-200)# vsrp-aware vrid 1 tc-vlan-flush
   device(config-vlan-200)# show vsrp aware vlan 200
   Aware Port Listing
      VLAN ID VRID Last  Port Auth  Type        Mac-Flush  Age
       200     1   N/A   no-auth    Configured  Enabled    00:00:00.0
   ```

5. Optionally, display active VRID interfaces.

   ```
   device# show vsrp aware
   Aware port listing
   VLAN ID  VRID  Last Port
   100      1     1/3/2
   200      2     1/4/1
   ```

VSRP fast start

VSRP fast start allows non-RUCKUS or non-VSRP aware devices that are connected to a RUCKUS device that is the VSRP Master to quickly switchover to the new Master when a VSRP failover occurs

This feature causes the port on a VSRP Master to restart when a VSRP failover occurs. When the port shuts down at the start of the restart, ports on the non-VSRP aware devices that are connected to the VSRP Master flush the MAC address they have learned for the VSRP master. After a specified time, the port on the previous VSRP Master (which now becomes the Backup) returns back online. Ports on the non-VSRP aware devices switch over to the new Master and learn its MAC address.

Special considerations when configuring VSRP fast start

Consider the following when configuring VSRP fats start:

- VSRP is sensitive to port status. When a port goes down, the VSRP instance lowers its priority based on the port up fraction. Since the VSRP fast start feature toggles port status by bringing ports down and up it can affect VSRP instances because their priorities get reduced when a port goes down. To avoid this, the VSRP fast start implementation keeps track of ports that it brings down and suppresses port down events for these ports (as concerns VSRP).
- Once a VSRP restart port is brought up by a VSRP instance, other VSRP instances (in Master state) that have this port as a member do not go to forwarding immediately. This is a safety measure that is required to prevent transitory loops. This could happen if a peer VSRP node gets completely cut off from this node and assumed Master state. In this case, where there are 2 VSRP instances that are in Master state and forwarding, the port comes up and starts forwarding immediately. This would cause a forwarding loop. To avoid this, the VSRP instance delays forwarding.

Recommendations for configuring VSRP fast start

The following recommendations apply to configurations where multiple VSRP instances are running between peer devices sharing the same set of ports:

- Multiple VSRP instances configured on the same ports can cause VSRP instances to be completely cut off from peer VSRP instances. This can cause VSRP instances to toggle back and forth between master and backup mode. For this reason, we recommend that you configure VSRP fast start on a per port basis rather than for the entire VLAN.
- We recommend that VSRP peers have a directly connected port without VSRP fast start enabled on it. This allows protocol control packets to be received and sent even if other ports between the master and standby are down.
- The VSRP restart time should be configured based on the type of connecting device since some devices can take a long time to bring a port up or down (as long as several seconds). In order to ensure that the port restart is registered by neighboring device, the restart time may need to be changed to a value higher than the default value of 1 second.

Configuring VSRP fast start globally

VSRP fast start enables non-RUCKUS ICX or non-VSRP aware devices that are connected to a RUCKUS ICX device which is the VSRP Master to quickly switch over to the new Master when VSRP failover occurs.

VSRP is enabled.

VSRP fast start can be enabled on a VSRP-configured device, either on a VALN to which the VRID of the VSRP-configured device belongs (globally) or on a port that belongs to the VRID.

1. On any device on which you want to configure, from privileged EXEC mode, enter global configuration mode by issuing the **configure terminal** command.

```
device# configure terminal
```

2. Configure a VLAN by assigning an ID to the VLAN.

```
device(config)# vlan 100
```

3. Assign a VSRP VRID to the VLAN.

```
device(config-vlan-100)# vsrp vrid 100
```

4. Enable VSRP fast start. Globally configure a VSRP-configured device to shut down its ports when a failover occurs, and restart after a specified time. This will shutdown all the ports, with the specified VRID, that belong to the VLAN when failover occurs.

```
device(config-vlan-100-vrid-100)# restart-ports 5
```

5. Verify the configuration using **show vsrp vrid** command.

```
device# show vsrp vrid 100
VLAN 100
  auth-type no authentication
  VRID 100
  ========
   State      Administrative-status Advertise-backup Preempt-mode save-current
   master     enabled               disabled         true         false
   Parameter        Configured Current    Unit/Formula
   priority         100        50         (100-0)*(2.0/4.0)
   hello-interval   1          1          sec/1
   dead-interval    3          3          sec/1
   hold-interval    3          3          sec/1
   initial-ttl      2          2          hops
   next hello sent in 00:00:00.3
   Member ports:      ethernet 1/2/5 to 1/2/8
   Operational ports: ethernet 1/2/5 ethernet 1/2/8
   Forwarding ports:  ethernet 1/2/5 ethernet 1/2/8
   Restart ports:     1/2/5(1) 1/2/6(1) 1/2/7(1) 1/2/8(1)
```

VSRP and MRP signaling

A device may connect to an MRP ring through VSRP to provide a redundant path between the device and the MRP ring. VSRP and MRP signaling ensures rapid failover by flushing MAC addresses appropriately. The host on the MRP ring learns the MAC addresses of all devices on the MRP ring and VSRP link. From these MAC addresses, the host creates a MAC database (table), which is used to establish a data path from the host to a VSRP-linked device. The following figure below shows two possible data paths from the host to Device 1.

FIGURE 17 Two data paths from host on an MRP ring to a VSRP-linked device

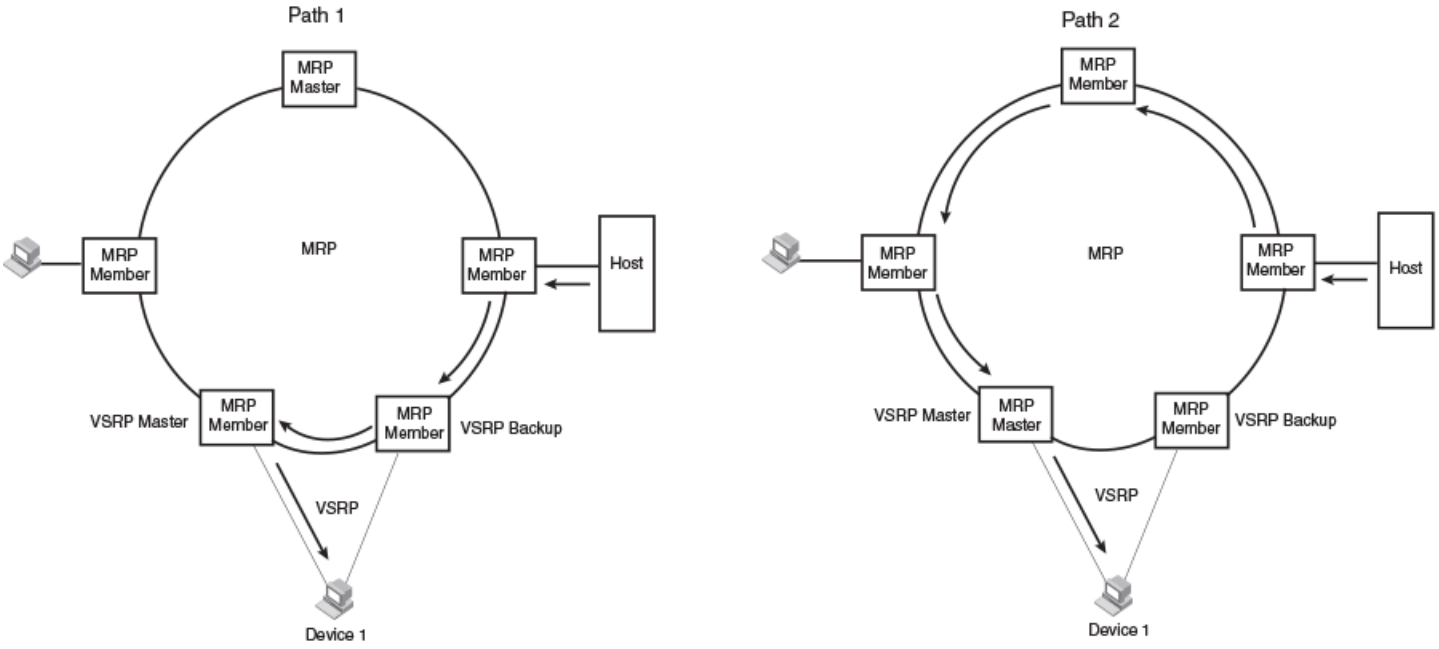

If a VSRP failover from master to backup occurs, VSRP needs to inform MRP of the topology change; otherwise, data from the host continues along the obsolete learned path and never reach the VSRP-linked device, as shown in the following figure.

FIGURE 18 VSRP on MRP rings that failed over

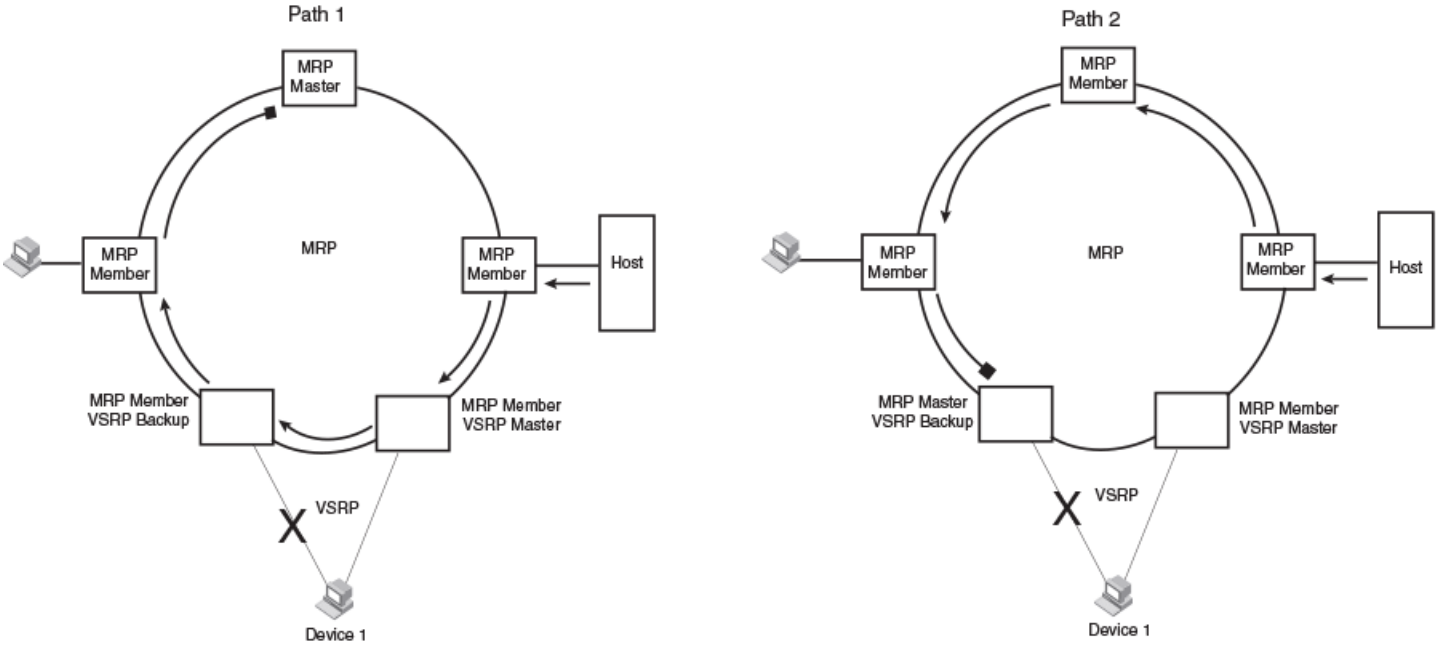

A signaling process for the interaction between VSRP and MRP ensures that MRP is informed of the topology change and achieves convergence rapidly. When a VSRP node fails, a new VSRP master is selected. The new VSRP master finds all MRP instances impacted by the failover. Then each MRP instance does the following:

- The MRP node sends out an MRP PDU with the mac-flush flag set three times on the MRP ring.
- The MRP node that receives this MRP PDU empties all the MAC entries from its interfaces that participate on the MRP ring.
- The MRP node then forwards the MRP PDU with the mac-flush flag set to the next MRP node that is in forwarding state.

The process continues until the Master MRP node secondary (blocking) interface blocks the packet. Once the MAC address entries have been flushed, the MAC table can be rebuilt for the new path from the host to the VSRP-linked device as shown in the following figure.

FIGURE 19 New path established

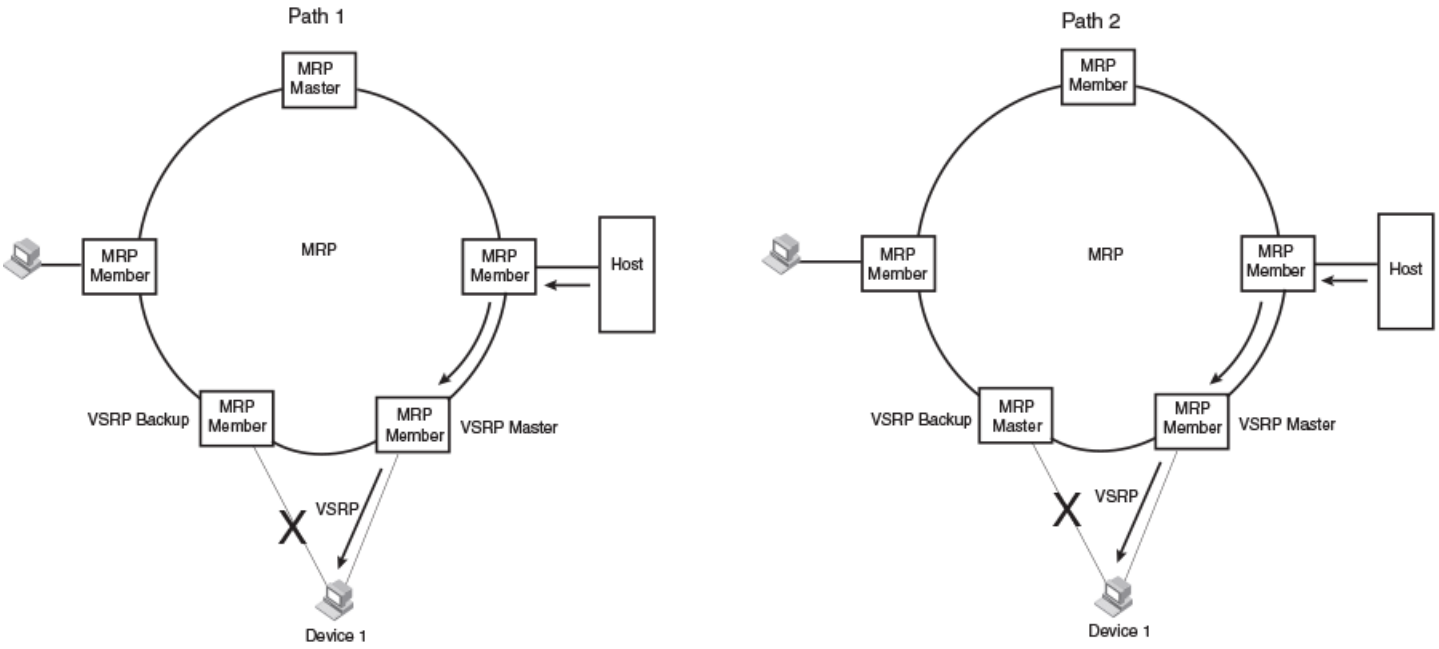

There are no CLI commands used to configure this process.

UDLD

- UDLD overview 57
- UDLD for tagged ports 58
- Configuration notes and feature limitations for UDLD 58
- Configuring UDLD 58
- Displaying information for all ports 59
- Displaying information for a single port 59
- Clearing UDLD statistics 60

UDLD overview

Uni-Directional Link Detection (UDLD) monitors a link between two RUCKUS devices and brings the ports on both ends of the link down if the link goes down at any point between the two devices. This feature is useful for links that are individual ports and for trunk links. The following figure shows an example.

FIGURE 20 UDLD example

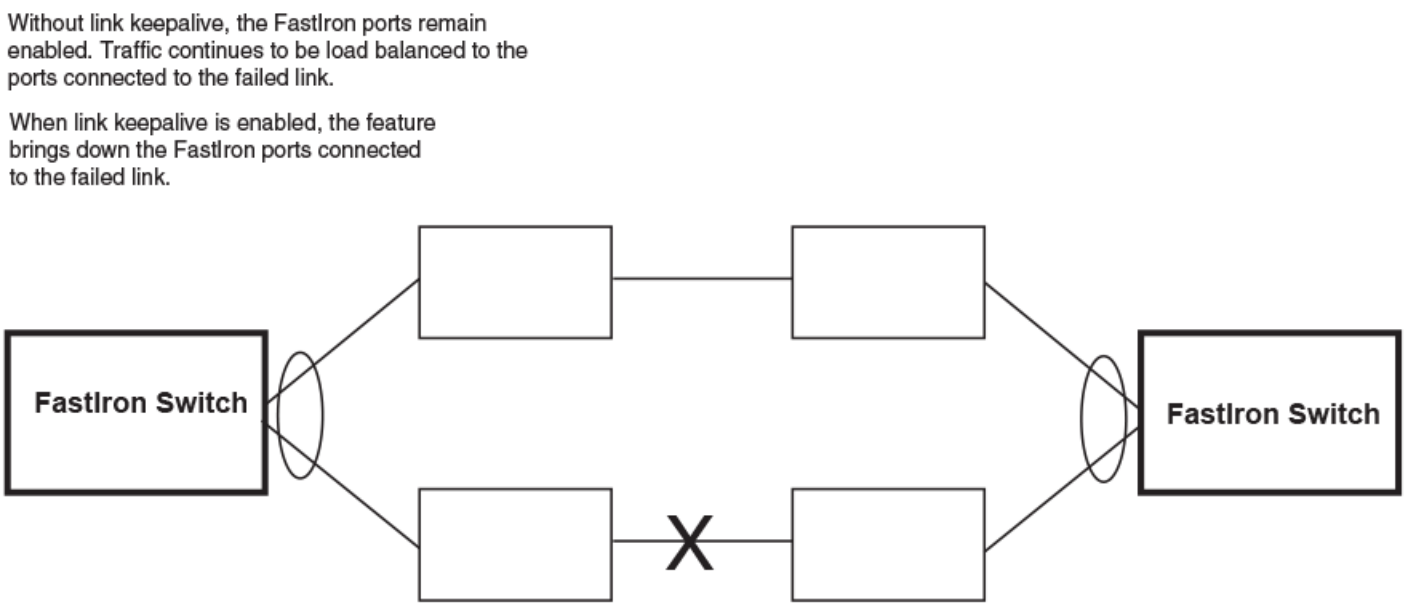

Normally, a RUCKUS device load balances traffic across the ports in a trunk group. In this example, each RUCKUS device load balances traffic across two ports. Without the UDLD feature, a link failure on a link that is not directly attached to one of the RUCKUS devices is undetected by the RUCKUS devices. As a result, the RUCKUS devices continue to send traffic on the ports connected to the failed link.

When UDLD is enabled on the trunk ports on each RUCKUS device, the devices detect the failed link, disable the ports connected to the failed link, and use the remaining ports in the trunk group to forward the traffic.

Ports enabled for UDLD exchange proprietary health-check packets once every second (the keepalive interval). If a port does not receive a health-check packet from the port at the other end of the link within the keepalive interval, the port waits for two more intervals. If the port still does not receive a health-check packet after waiting for three intervals, the port concludes that the link has failed and takes the port down.

UDLD for tagged ports

The default implementation of UDLD sends the packets untagged, even across tagged ports. If the untagged UDLD packet is received by a third-party switch, that switch may reject the packet. As a result, UDLD may be limited only to RUCKUS devices, since UDLD may not function on third-party switches.

To solve this issue, you can configure ports to send out UDLD control packets that are tagged with a specific VLAN ID. This feature also enables third party switches to receive the control packets that are tagged with the specified VLAN. For tagged operation, all of the following conditions must be met:

- A VLAN is specified when UDLD is configured
- The port belongs to the configured VLAN as tagged member
- All the devices across the UDLD link are in the same VLAN

Configuration notes and feature limitations for UDLD

- UDLD is supported only on Ethernet ports.
- UDLD can be enabled on only one VLAN for tagged port.
- The link-keepalive protocol is not supported on Isolated or Community VLAN ports.
- To configure UDLD on a LAG, you must enable and configure the feature on each port of the LAG individually.
- Low UDLD **link-keepalive** interval and retry options are not recommended as they are more sensitive and prone to flaps.
- When UDLD is enabled on a LAG port, LAG threshold is not supported.
- Dynamic trunking is not supported. If you want to configure a LAG that contains ports on which UDLD is enabled, you must remove the UDLD configuration from the ports. After you create the LAG, you can re-add the UDLD configuration.
- If MRP is also enabled on the device, RUCKUS recommends that you set the MRP preforwarding time slightly higher than the default of 300 ms; for example, to 400 or 500 ms. Refer to Changing the hello and preforwarding times on page 33.

Configuring UDLD

Uni-Directional Link Detection (UDLD) monitors a link between two RUCKUS devices and brings the ports on both ends of the link down if the link goes down at any point between the two devices.

1. Enable UDLD:
   - On a port for untagged control packets:

     ```
     device(config)# link-keepalive ethernet 1/1/1
     ```

   - On a trunk group:

     ```
     device(config)# link-keepalive ethernet 1/1/1 ethernet 1/1/2
     ```

   - To receive and send UDLD control packets tagged with a specific VLAN ID:

     ```
     device(config)# link-keepalive ethernet 1/1/18 vlan 22
     ```

     NOTE
     You must configure the same VLANs that will be used for UDLD on all devices across the network; otherwise, the UDLD link cannot be maintained.

2. (Optional) Change the link health-check packet send interval.

```
device(config)# link-keepalive interval 4
```

3. (Optional) Set how many retries a port to makes when sent health-checks receive no reply.

```
device(config)# link-keepalive retries 10
```

Displaying information for all ports

To display UDLD information for all ports, enter the following command.

```
device# show link-keepalive
Total link-keepalive enabled ports: 4
Keepalive Retries: 3    Keepalive Interval: 1 Sec.
Port    Physical Link   Logical Link    State           Link-vlan
1/1/1   up              up              FORWARDING      3
1/1/2   up              up              FORWARDING
1/1/3   down            down            DISABLED
1/1/4   up              down            DISABLED
```

TABLE 6 CLI display of UDLD information

Field	Description
Total link-keepalive enabled ports	The total number of ports on which UDLD is enabled.
Keepalive Retries	The number of times a port will attempt the health check before concluding that the link is down.
Keepalive Interval	The number of seconds between health check packets.
Port	The port number.
Physical Link	The state of the physical link. This is the link between the RUCKUS port and the directly connected device.
Logical Link	The state of the logical link. This is the state of the link between this RUCKUS port and the RUCKUS port on the other end of the link.
State	The traffic state of the port.
Link-vlan	The ID of the tagged VLAN in the UDLD packet.

If a port is disabled by UDLD, the change also is indicated in the output of the **show interfaces brief** command. An example is given below.

```
device# show interfaces brief
Port    Link State      Dupl Speed Trunk Tag Priori MAC            Name
1/1/1   Up   LK-DISABLE None None  None  No  level0 0000.00a9.bb00
1/1/2   Down None       None None  None  No  level0 0000.00a9.bb01
1/1/3   Down None       None None  None  No  level0 0000.00a9.bb02
1/1/4   Down None       None None  None  No  level0 0000.00a9.bb03
```

If the port was already down before you enabled UDLD for the port, the port state is listed as None.

Displaying information for a single port

To display detailed UDLD information for a specific port, enter a command such as the following.

```
device#show link-keepalive ethernet 4/1/1
Current State   : up            Remote MAC Addr  : 0000.00d2.5100
Local Port      : 4/1/1         Remote Port      : 2/1/1
Local System ID : e0927400      Remote System ID : e0d25100
```

```
Packets sent     : 254           Packets received : 255
Transitions      : 1             Link-vlan        : 100
```

TABLE 7 CLI display of detailed UDLD information

Field	Description
Current State	The state of the logical link. This is the link between this RUCKUS port and the RUCKUS port on the other end of the link.
Remote MAC Addr	The MAC address of the port or device at the remote end of the logical link.
Local Port	The port number on this RUCKUS device.
Remote Port	The port number on the RUCKUS device at the remote end of the link.
Local System ID	A unique value that identifies this RUCKUS device. The ID can be used by RUCKUS technical support for troubleshooting.
Remote System ID	A unique value that identifies the RUCKUS device at the remote end of the link.
Packets sent	The number of UDLD health-check packets sent on this port.
Packets received	The number of UDLD health-check packets received on this port.
Transitions	The number of times the logical link state has changed between up and down.
Link-vlan	The ID of the tagged VLAN in the UDLD packet.

The **show interface ethernet** command also displays the UDLD state for an individual port. In addition, the line protocol state listed in the first line will say "down" if UDLD has brought the port down. An example is given below.

```
device#show interface ethernet 1/1/1
FastEthernet1/1/1 is down, line protocol is up, link keepalive is enabled
  Hardware is FastEthernet, address is 0000.00a9.bbca (bia 0000.00a9.bbca)
  Configured speed auto, actual unknown, configured duplex fdx, actual unknown
  Member of L2 VLAN ID 1, port is untagged, port state is DISABLED
  STP configured to ON, priority is level0, flow control enabled
  mirror disabled, monitor disabled
  Not member of any active trunks
  Not member of any configured trunks
  No port name
  300 second input rate: 0 bits/sec, 0 packets/sec, 0.00% utilization
  300 second output rate: 0 bits/sec, 0 packets/sec, 0.00% utilization
  0 packets input, 0 bytes, 0 no buffer
  Received 0 broadcasts, 0 multicasts, 0 unicasts
  0 input errors, 0 CRC, 0 frame, 0 ignored
  0 runts, 0 giants, DMA received 0 packets
  19 packets output, 1216 bytes, 0 underruns
  Transmitted 0 broadcasts, 19 multicasts, 0 unicasts
  0 output errors, 0 collisions, DMA transmitted 19 packets
```

In this example, the port has been brought down by UDLD. Notice that in addition to the information in the first line, the port state on the fourth line of the display is listed as DISABLED.

Clearing UDLD statistics

You use this command to clear UDLD statistics.

To clear UDLD statistics, enter the following command.

```
device# clear link-keepalive statistics
```

Link Aggregation Group

- Overview of link aggregation....61
- LAG virtual interface....62
- LAG virtual anchor speed....63
- LAG Formation Rules....63
- Error disable....64
- Error disable recovery....64
- Use cases....65
- Configuration notes for FastIron devices in a traditional stack....65
- Maximum number of LAGs....66
- Upgrade and downgrade notes....67
- LAG Load Sharing....67
- LAG hashing on stacking products....68
- Symmetric load balancing....68
- Configuring a LAG....71
- Resilient hashing....82

Overview of link aggregation

Link aggregation allows you to bundle multiple physical Ethernet links to form a single logical trunk providing enhanced performance and redundancy. The aggregated trunk is referred to as a Link Aggregation Group (LAG). The LAG is viewed as a single logical link by connected devices, the Spanning Tree Protocol, IEEE 802.1Q VLANs, and so on. When one physical link in the LAG fails, the other links stay up. A small drop in traffic is experienced when the link carrying the traffic fails.

To configure links to form a LAG, the physical links must be of the same speed. Link aggregation can be done by statically configuring the LAG, or by dynamically configuring the LAG using the IEEE 802.1AX Link Aggregation Control Protocol (LACP).

When queuing traffic from multiple input sources to the same output port, all input sources are given the same weight, regardless of whether the input source is a single physical link or a trunk with multiple member links.

The benefits of link aggregation are summarized as follows:

- Increased bandwidth (The logical bandwidth can be dynamically changed as the demand changes.)
- Increased availability
- Load sharing
- Rapid configuration and reconfiguration

This chapter describes how to configure Link Aggregation Groups (LAG). You can also use a single interface to configure any of the following LAG types

Static LAGs - These LAGs are manually-configured aggregate links containing multiple ports. In static link aggregation, links are added into a LAG without exchanging any control packets between the partner systems. The distribution and collection of frames on static links is determined by the operational status and administrative state of the link.

Dynamic LAGs - This LAG type uses the Link Aggregation Control Protocol (LACP), to maintain aggregate links over multiple port. Typically, two partner systems sharing multiple physical Ethernet links can aggregate a number of those physical links using LACP. LACP creates a LAG on both partner systems and identifies the LAG by the LAG ID. All links with the same administrative key, and all links that are connected to the same partner switch become members of the LAG. LACP PDUs are exchanged between ports on each device to determine if the connection is active. The LAG shuts down ports whose connection is no longer active.

NOTE
The LAG functionality was referred to as Trunk Groups in previous releases.

Keep Alive LAGs - In a Keep Alive LAG a single connection between a single port on 2 RUCKUS devices is established. In a keep alive LAG, LACP PDUs are exchanged between the 2 ports to determine if the connection between the devices is still active. If it is determined that the connection is no longer active, the ports are blocked.

NOTE
The Keep Alive LAG functionality was referred to as Single Link LACP in previous releases.
The new LAG configuration procedures supersede the previous configurations procedures for LAGs and Dynamic Link Aggregation. When a RUCKUS device is upgraded to 08.0.61 any configurations for LAGs or Dynamic Link Aggregation defined in releases prior to 08.0.61 will be converted to a 08.0.61 (and later) compatible LAG configuration.

LAG virtual interface

LAG virtual interface is a logical interface that represents a bundle of physical interfaces that form a LAG. The primary port that anchored the LAG will not exist from 8.0.61 release onwards. Instead, all features running over LAG will be anchored on the LAG virtual interface. All member ports of the LAG are treated as secondary ports and hence, any physical port can be added or removed from the LAG without tearing down the LAG. The LAG virtual interface is created when a LAG is configured.

A new mode called LAG virtual interface is introduced and the properties of the LAG can be added, modified, or deleted using the respective commands in the LAG virtual interface mode. The LAG virtual interface and the properties it support are similar to an Ethernet interface. The configuration of the Link Aggregation Groups using the LAG virtual interface is described in Creating a Link Aggregation Group (LAG) on page 71. Like Ethernet interfaces, the LAG virtual interface also supports multi interface mode.

Any new configuration or changes made to the LAG virtual interface is propagated to all ports in the LAG, ensuring a consistent configuration of the member ports. Interface-level configurations can be applied only on the LAG virtual interface and not on any member ports. If the member ports are mentioned in the interface command, it automatically moves to the LAG virtual interface mode in which that port is a member.

NOTE
LAG virtual interface is applicable only for static LAG and dynamic LAG and is not supported for Keep-alive LAGs. LAG virtual interface configuration commands are not allowed for SPX LAG virtual interface.

LAG virtual interface is displayed among the list of interfaces in various show commands.

To view the LAG virtual interface details, refer Displaying LAG information on page 78.

LAG virtual interface MAC

The L2 protocols (xSTP, MRP) running over the LAG use the LAG MAC as the source MAC. The first physical port that is being added to the LAG becomes the MAC provider for the LAG virtual interface. When the first physical port (MAC provider) moves out, the next port is chosen as the MAC provider. However, a constant MAC can be assigned to the LAG virtual interface using the **lag-mac** command.

NOTE
If VE/L3 is configured on the LAG, the **show interface brief** command output displays the stack-mac as the LAG virtual interface MAC.

LAG virtual anchor speed

Lag interface will retain the reference operational speed as long as a member port is UP, when last port goes down then it will reset its operational speed. And depending on the subsequent port up sequence the lag interface reference speed will be chosen.

Since we rely on the first UP port to choose anchor operational speed, following behaviors aren't avoidable

- Error disabled ports shall change over the system reload as anchor operational speed can be different due to the order in which the links are brought up.
- Similar situation can happen when all lag member port goes down and later ports are brought up in different order.

As above behaviors can affect traffic forwarding over the LAG, make use of "speed-duplex" CLI available under vlag interface level to force a desired speed value for a LAG. As "speed-duplex" will be persistent over the reload, lag ports error disabled due to operational speed mismatch will be same before and after the reload.

NOTE
SPX-LAG operational speed validation is not supported.

LAG Formation Rules

- A port can be a member of only a single LAG, which can be a static, dynamic, or keep-alive LAG.
- RUCKUS ICX devices cannot form a LAG between two stacks using a RUCKUS optical breakout cable because the cable is not supported on a stack.
- In a linear stack, all ports of the same LAG must be connected to the same unit. Otherwise, you may lose connectivity when a stack port is disconnected from the Active stack unit.
- All ports configured in a LAG must be of the same configured speed, (for example, all **auto** or **1g** or **10g**, and so on).
- All ports configured in a LAG must be of the same operational speed.
- LAG formation rules are checked when a static or dynamic LAG is operational.
- All ports configured in a LAG must be configured in the same VLAN.
- All ports configured in a LAG must be configured with the same port attributes. The following lists contain Layer 2, Layer 3, and ACL requirements:
- Layer 2 requirements:

  The LAG is rejected for the following reasons:

  - The LAG ports do not have the same untagged VLAN component.
  - The LAG ports do not share the same VLAN membership or do not share the same uplink VLAN membership.
  - The LAG ports are configured as member ports of another LAG.
- Layer 3 requirements:

  The LAG is rejected if any of the member ports has any Layer 3 configurations, such as IPv4 or IPv6 address, OSPF, RIP, RIPng, IS-IS, route-only, and so on.
- ACL requirements:

  All LAG ports must have the same ACL configurations; otherwise, the LAG is rejected.
- Properties of the member ports that are being added to the LAG must be identical with respect to the following parameters:
  - Port tag type (untagged or tagged port)
  - Configured port speed and duplex
  - Operational port speed and duplex

  - LAG is formed with different speed capability ports, but the speed change is supported only to the least common speed port.
  - TOS-based configuration: On deletion of the LAG, each port inherits the same TOS-based QoS configuration.

  To change port parameters, you must change them on the LAG virtual interface. The software automatically applies the changes to the other ports in the LAG.
- The device on the other end of the LAG link must support the same number of ports in the link.
- A LAG is supported on 1-Gbps, 2.5-Gbps, 5-Gbps, 10-Gbps, 40-Gbps, and 100-Gbps ports.
- A LAG is formed with ports that have different speed capabilities. A speed change is supported to the least common speed possible among the physical ports.
- Port assignment on a module need not be consecutive. The port range can contain gaps. For example, you can configure ports 1, 3, and 4 (excluding 2).
- All the ports must be connected to the same physical or logical device at the other end.
- The sFlow configuration can be enabled on an individual port within a LAG. sFlow cannot be configured on LAG virtual interface. sFlow must be configured in LAG mode for each of the member ports separately.
- LAG virtual interface or any member ports of the LAG cannot be configured as sFlow source.
- RUCKUS ICX 7450 devices do not support change in speed of a 2.5G paired port, if at least one of the port is part of a LAG. To resolve this issue, you need to delete the LAG and maintain the same speed on all ports in the LAG.

  NOTE
  If both ports are 2.5-Gbps ports, and one of the ports is not part of a LAG, the device does not allow a speed change on that port. For example, in the 2.5-Gbps port pair of 25 and 26, if 25 is part of a LAG, the device does not change the speed of 26 without deleting the LAG that 25 is a part.

- Error-disabled interface cannot be added to LAG. To add the interface to LAG, recover the interface from error-disabled state.

Error disable

Lag ports whose operational speed doesn't match with vlag interface will be error disabled with reason "lag-operSpeed-mismatch". The error disabled interfaces can be recovered by customer if its operational speed is adjusted to match vlag interface speed.

Error disable recovery

The error disable auto recovery mechanism is used to bring the ports out of error disabled state. Also use the "speed-duplex" cli to change the configured speed of the member ports and which will result in an operational speed change implicitly. Depending on the peer speed duplex setting, either the port will come up in negotiated operational speed or the port remains down if the speed doesn't match peer speed configuration. Applying speed-duplex on vlag interfaces will flap the LAG member ports and subsequently all member ports which came UP will have same operational speed.

As different port types are bundled, their port speed capabilities like maximum speed and range of speeds supported are not same. Hence we should accept "speed-duplex" CLI only if all member ports can support the given speed value. And if configured speed cannot be supported on at least one member port we will reject "speed-duplex" CLI with appropriate error message.

Following are the ways by which an interface error disabled for lag operational speed mismatch reason can be recovered,

- Configure auto recovery timer for lag operational speed mismatch error disable reason.
- Applying a speed change using "speed-duplex" cli at LAG level will configure the speed and will auto recover the error disabled interfaces in the LAG.

- Disabling and enabling the interface LAG.
- Disabling and enabling the errdisabled interface/member-port under lag-level.
- An error disabled interface when removed from LAG, error disabled state is reset and port will remain disabled.

Use cases

Some ports gets error disabled if the operational speed of the ports are different. For example if there are two ports with 1G and 10G, the 10G port is error disabled, as the 1G port comes up first. If you want to use speed duplex then the operational speed of the 10G port also becomes 1G to match te lowest common speed. So you need to choose the right combination of the ports to be aggregated to get the best effective bandwidth.

Configuration notes for FastIron devices in a traditional stack

In a RUCKUS traditional stack system, a LAG may have port members distributed across multiple stack units. Both static and dynamic LAGs are supported.

The following notes apply to FastIron stackable devices that are part of a traditional stack:

- If a stack unit fails or is removed from the stack, its static LAG configuration becomes a reserved configuration on the Active Controller. Any remaining ports of the static LAG in the traditional stack continue to function.
- When a new stack unit is added to a traditional stack, the new unit receives the running configuration and LAG information, including a list of ports that are up and are members of a LAG, from the Active Controller.
- Before merging two traditional stack devices, make sure that there are no static LAGs configured between them. This can result in self-looped ports.
- You cannot configure a LAG between CB and PE ports in SPX stack.
- When a traditional stack device with a static LAG partitions into multiple traditional stacks, loops and forwarding errors may occur. In these cases, user intervention is required to remove the loops.
- 10 Gbps links support up to 16 ports in a LAG for stackable units.

The following figure displays an example of a valid, keep-alive LAG link between two devices. This configuration does not aggregate ports but uses the LACP PDUs to maintain the connection status between the two ports.

FIGURE 21 Example of a 1-port keep-alive LAG

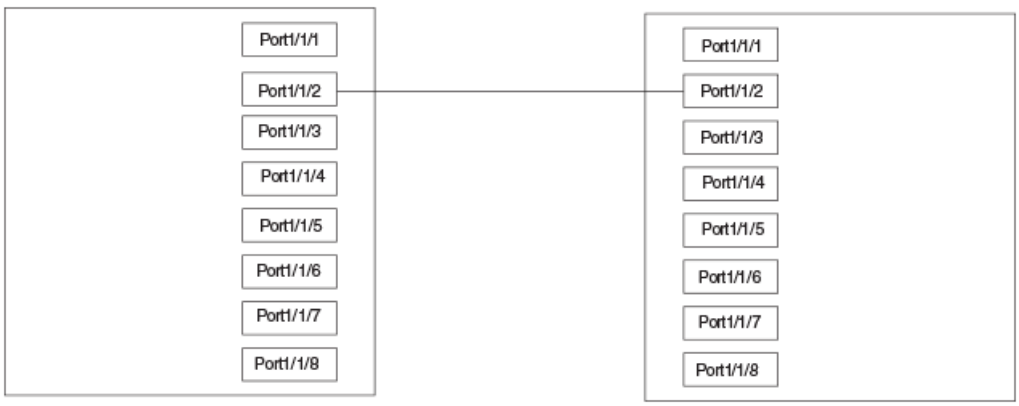

The following figure shows an example of a valid 2-port LAG link between devices where the ports on each end are on the same interface module. Ports in a valid 2-port LAG on one device are connected to two ports in a valid 2-port LAG on another device.

FIGURE 22 Example of a 2-port LAG

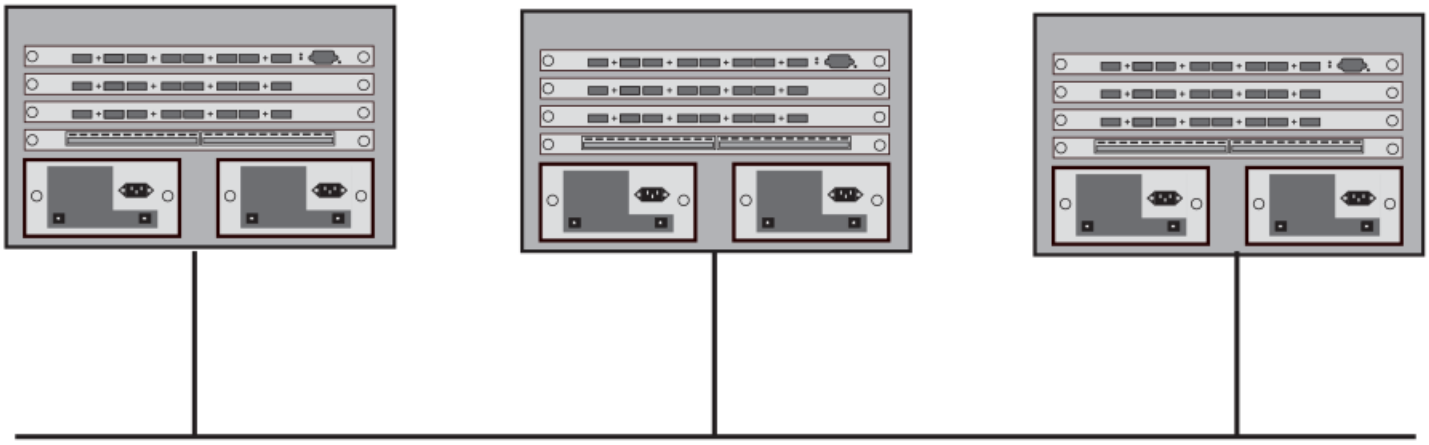

The following figure shows an example of two devices connected over a 4-port LAG where the ports on each end of the LAG are on different interface modules.

FIGURE 23 Examples of a multislot, multiport LAG

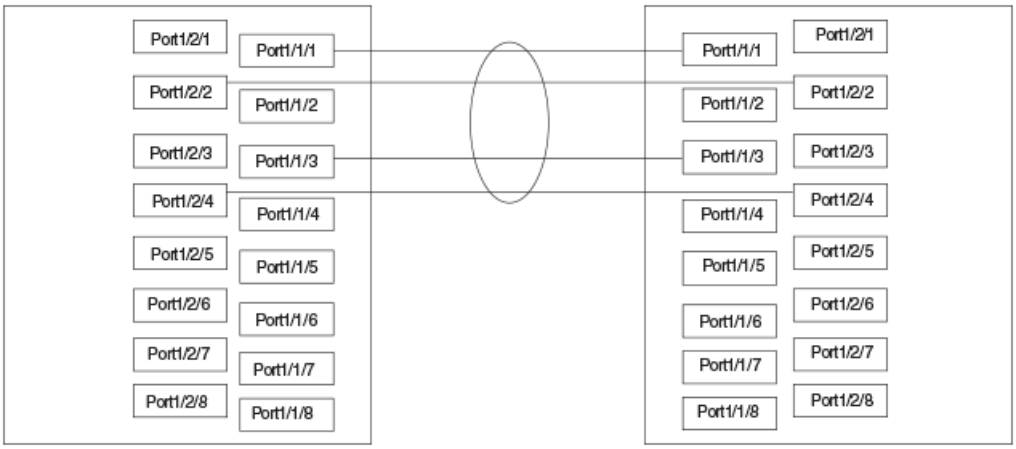

Maximum number of LAGs

The following table lists the maximum number of LAGs you can configure on a RUCKUS ICX device and the valid number of ports in a LAG. The table applies to static and LACP ports.

TABLE 8 Maximum number of LAGs

Model	Maximum number of LAGs		Valid number of ports in a group
	Static	LACP	
ICX 7850 ICX 7750 ICX 7650 ICX 7450 ICX 7250	256	256	1 to 16 **NOTE** The RUCKUS ICX device can scale up to a maximum of 2048 LAG ports only.
ICX 7150	128	128	1 to 8 RUCKUS ICX 7150 can scale up to 1024 and is also limited to the number of ports on the device.

Upgrade and downgrade notes

When a RUCKUS ICX device is upgraded to 08.0.61, any configurations for LAGs or Dynamic Link Aggregation defined in releases prior to 08.0.61 will be converted to a 08.0.61 (and later) compatible LAG configuration.

Auto downgrade is not supported. Save the old config in the previous configuration format before upgrade followed by downgrade.

LAG Load Sharing

RUCKUS ICX devices load share across the ports in the LAG group. The method used for the load sharing depends on the device type and traffic type (Layer 2 or Layer 3).

Support for IPv6 When Sharing Traffic Across a LAG Group

Devices that support IPv6 take the IPv6 address for a packet into account when sharing traffic across a LAG group. The load sharing is performed in the same way it is for IPv4 addresses; that is, LAG types with a traffic load that is shared based on IPv4 address information can use IPv6 addresses to determine load sharing.

Load Balancing for Broadcast, Unknown Unicast, and Multicast Traffic

Known unicast traffic is always load balanced across all the ports of a LAG group based on the traffic's Layer 2 and Layer 3 source and destination parameters of the traffic.

Broadcast, unknown unicast, multicast traffic is load balanced based either on source and destination IP addresses and protocol field, or, in some cases, on source and destination IP addresses, protocol field, source MAC address, and destination MAC address.

> **NOTE**
> ICX 7150 devices handle broadcast, unknown unicast, and multicast IP traffic distribution differently. ICX 7150 LAG hashing for these traffic types is based on source and destination MAC addresses.

The load balancing method for bridged traffic varies depending on the traffic type. Load balancing for routed traffic is always based on the source and destination IP addresses and protocol field.

TABLE 9 LAG Load Sharing on RUCKUS ICX Devices

Traffic Type	Load Balancing Method[1]
Layer 2 bridged non-IP	Source and destination MAC addresses

TABLE 9 LAG Load Sharing on RUCKUS ICX Devices (continued)

Traffic Type	Load Balancing Method[1]
Layer 2 bridged IP non-TCP/UDP	Source and destination MAC addresses, and source and destination IP addresses
Layer 2 bridged IPv4 TCP/UDP	Source and destination IP addresses, and source and destination TCP/UDP ports
Layer 2 bridged IPv4 non-TCP/UDP	Source and destination IP addresses
Layer 2 bridged IPv6 TCP/UDP	Source and destination IP addresses, source and destination TCP and UDP ports, and flow label
Layer 2 bridged IPv6 non-TCP/UDP	Source and destination TCP and UDP ports, and flow label
Layer 3 routed traffic	Source and destination IP addresses and protocol field
Layer 3 multicast	Source and destination IP addresses and protocol field, and, for TCP/UDP packets, Layer 4 source and destination ports

LAG hashing on stacking products

LAG hashing on stacking products is required when multicast routing is configured on a tunnel interface and the IP multicast packets terminate in the tunnel (for example, when the **ip pim**, **ip pim-sparse** , or **ip igmp proxy** multicast routing commands are configured on a tunnel interface).

Stacking trunk hashing for FastIron devices is dynamic. Based on load, traffic is distributed across individual links in the trunk. Stacking trunks on ICX 7150 devices are an exception. Just as on ICX 7150 Layer 2 LAGs, ICX 7150 stacking trunks hash traffic based on traffic type, for example Layer 2, Layer 3, and Layer 4 header information.

Symmetric load balancing

Symmetric load balancing is a mechanism of interchanging the source and destination addresses to ensure that bidirectional traffic specific to a particular source and destination address pair flows out of the same member of a trunk group.

NOTE
Symmetric load balancing is not supported on non-IP data traffic.

For many monitoring and security applications, bidirectional conversations flowing through the system must be carried on the same port of a LAG. For network telemetry applications, network traffic is tapped and sent to a RUCKUS ICX device, which can hash selected traffic to the application servers' downstream. Each server analyzes the bidirectional conversations. Therefore, the devices must enable symmetric load balancing to accomplish bidirectional conversations. In addition, the firewall between the RUCKUS ICX devices can be configured to allow the bidirectional conversations per link of the LAG. These network telemetry applications also require symmetric load balancing on the LAGs between the devices.

NOTE
Symmetric load balancing is supported on RUCKUS ICX 7850, RUCKUS ICX 7750, RUCKUS ICX 7450, and RUCKUS ICX 7250.

[1] In ICX 7150 devices, the LAG hashing scheme is different from other ICX platforms. As a result, the user may observe uneven distribution of packets when the traffic pattern is sequential or incremental in the same step, for example, when both the source and the destination IP address are incremented in the same step.

FIGURE 24 Symmetric load balancing

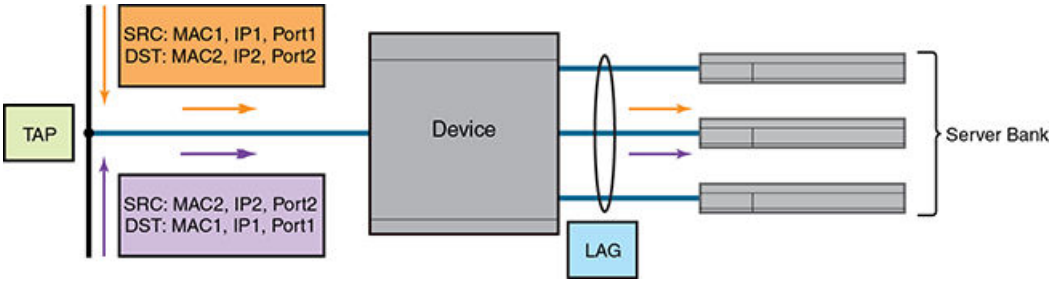

NOTE

Symmetric load balancing can also be used in case of Equal-cost multi-path routing (ECMP) where the same next hop is selected for bidirectional conversation.

You can enable symmetric load balancing for IPv4 and IPv6 data traffic on RUCKUS ICX devices using the **load-balance symmetric** command.

Run the **show running-config** command to check if symmetric load balancing is enabled.

NOTE

Symmetric load balancing is a system level configuration and may affect load sharing among LAG members as compared to non-symmetric load balancing and the ECMP next hop load sharing by not fairly utilizing all the LAG links. It might also affect load sharing within a stack trunk in case of broadcast, unknown unicast, and multicast (BUM) traffic where the user may not see all the stack trunk member links getting fairly utilized.

TABLE 10 Fields used for hash calculation based on packet types

Packet type	Hashing field	Is symmetric load balancing supported on RUCKUS ICX 7xxx platforms?
Non-IP packets	Source MAC address and destination MAC address	No
IPv4/ IPv6 packets	SIP, DIP, protocol type, and Layer 4 source or destination ports (only if non-fragmented packet)	Yes
TCP/ UDP packets	SIP, DIP, protocol type, and Layer 4 source or destination ports (only if non-fragmented packet)	Yes
IP-in-IP tunnel/GRE packets	Layer 4 source or destination ports (only if non-fragmented packet), SIP, DIP, and protocol type from the inner IP payload	Yes

[1] In ICX 7150 devices, the LAG hashing scheme is different from other ICX platforms. As a result, the user may observe uneven distribution of packets when the traffic pattern is sequential or incremental in the same step, for example, when both the source and the destination IP address are incremented in the same step.

Use case: Deploying RUCKUS ICX 7750 as a traffic splitter in a DPI solution

FIGURE 25 Symmetric load balancing in RUCKUS ICX 7750

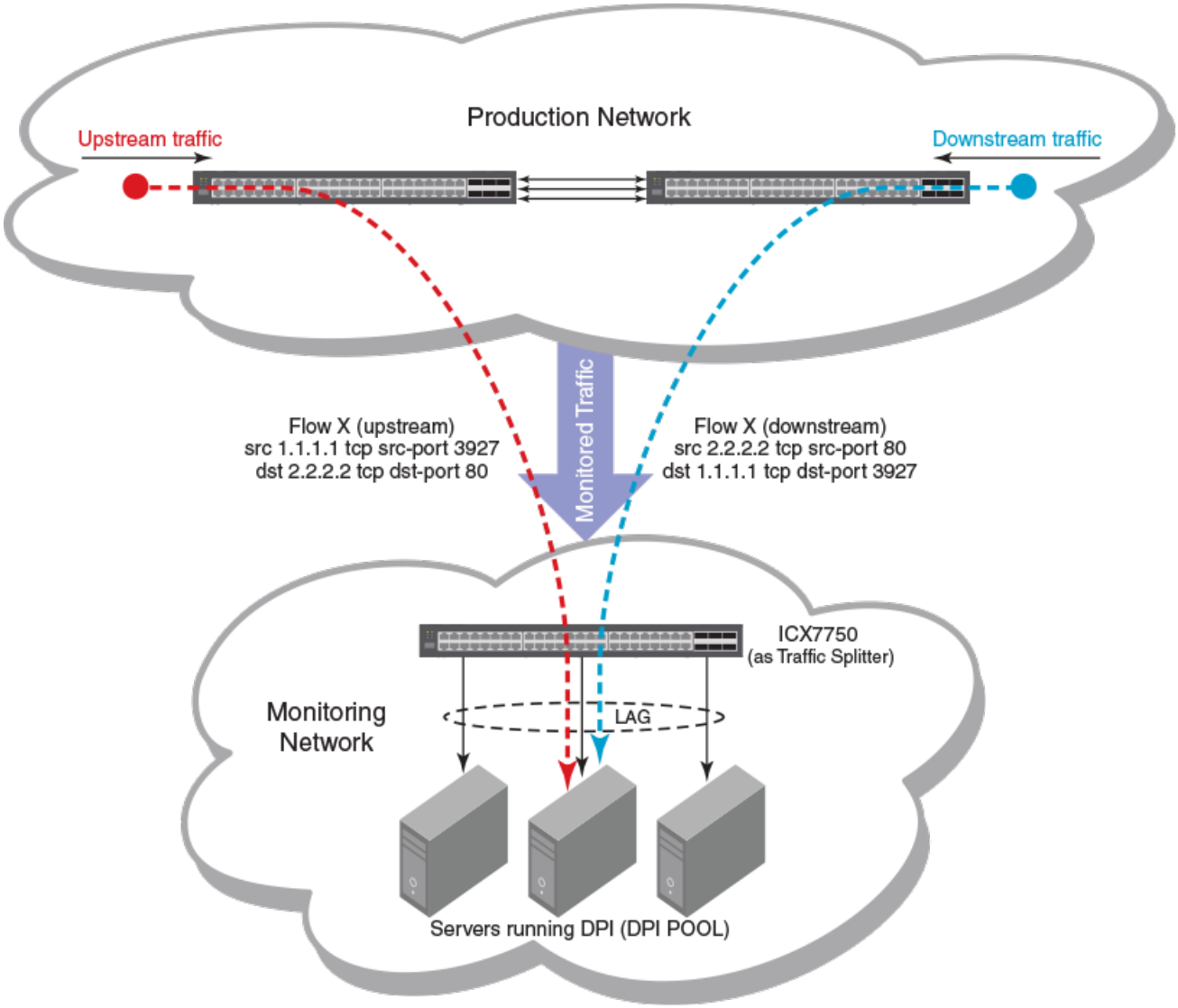

Production network: Traffic flowing in the production network is mirrored onto a few ports that connect to the monitoring network.

Monitoring network: In the monitoring network, the ICX 7750 is deployed as a traffic splitter. There are multiple servers hosting the DPI application and connected to ICX 7750. All monitored traffic is transparently flooded onto the VLAN and is load-balanced among the outgoing ports connected to the DPI pool.

NOTE

For our analysis, we assume that the bidirectional traffic pertaining to the same SIP-DIP pair and/ or same layer 4 source/destination pair should go to the same DPI (connected to one of the LAG port).

After enabling symmetric load balancing, Flow X upstream traffic (with SIP as 1.1.1.1, DIP as 2.2.2.2, layer 4 source port as 3927, layer 4 destination port as 80) and Flow X downstream traffic (with SIP as 2.2.2.2, DIP as 1.1.1.1, layer 4 source port as 80, layer 4 destination port as 3927) will hash to the same member link of the LAG resulting in the bidirectional conversation going to the same DPI pool.

Configuring a LAG

The following configuration procedures are used to configure a LAG. Depending upon whether you are configuring a static, dynamic or keep-alive LAG, the configuration procedures may or may not apply as described:

- Creating a Link Aggregation Group
- Adding Ports to a LAG
- Configuring the properties of the LAG on the LAG virtual interface.
- Configuring the Load Sharing Type (Optional)
- Specifying the LAG Threshold for a Static LAG Group (Optional)
- Configuring an LACP Timeout (Optional). The LACP Timeout is Long by default.
- Configuring LACP operation mode as active or passive (Optional). The LACP operation mode is Active by default.

Creating a Link Aggregation Group (LAG)

Complete the following steps to create a LAG.

1. Enter the global configuration mode.

   ```
   device# configure terminal
   ```

2. Configure a LAG. You can configure any of the following LAG types: static LAG, dynamic LAG, or keep-alive LAG.
   - Configure a static LAG.

     ```
     device(config)# lag blue static id 11
     ```

   - Configure a dynamic LAG.

     ```
     device(config)# lag dblue dynamic id auto
     ```

   - Configure a keep-alive LAG.

     ```
     device(config)# lag kblue keep-alive
     ```

   The LAG ID can be automatically generated and assigned to a LAG using the **auto** option.

   LAG IDs are unique for each LAG in the system. A LAG ID cannot be assigned to more than one LAG. If a LAG ID is already used, the CLI will reject the new LAG configuration and display an error message that suggests the next available LAG ID that can be used.

   NOTE
   The LAG ID parameter is applicable for static and dynamic LAGs only. No explicit configuration of a LAG ID is allowed on keep-alive LAGs.

   The keep-alive LAG option allows you to configure a LAG for use in keep-alive applications similar to the UDLD feature.

3. Add ports to the LAG. The following example shows configuration of a static LAG with two ports.

```
device(config-lag-blue)# ports ethernet 1/3/1 ethernet 1/3/2
```

Upon the addition of the first physical port to a LAG, a LAG virtual interface is created and is available for user configuration.

If there is only one port in the LAG, a single port LAG is formed. For a dynamic LAG, LACP is started for each LAG port. For a keep-alive LAG, no LAG is formed and LACP is started on the LAG port.

A static or dynamic LAG can consist of 1 to 8 or 1 to 16 ports (depending on the device you are using) of the same type and speed that are on any interface module within the RUCKUS chassis. A keep-alive LAG consists of only one port.

The ports can be added to the LAG sequentially as shown in the following example:

```
device(config-lag-blue)# ports ethernet 1/3/1 ethernet 1/2/2 ethernet 1/4/3 ethernet 1/3/4
```

A range of ports from a single interface module can be specified. In the following example, Ethernet ports 1, 2, 3 and 4 on the interface module in slot 3 are configured in a single LAG:

```
device(config-lag-blue)# ports ethernet 1/3/1 to 1/3/4
```

Additionally, you can mix a range of ports from one interface module with individual ports from other interface modules to form a LAG as shown in the following:

```
device(config-lag-blue)# ports ethernet 1/3/1 to 1/3/4 ethernet 1/2/2
```

Configuring LAG virtual interface

A LAG virtual interface allows you to enter the LAG virtual interface mode or multi-LAG virtual interface mode. To configure a LAG virtual interface, enter the following commands. All commands applicable on the physical port is available in the LAG virtual interface mode and the same applies for multi-LAG virtual interface commands as well.

1. Enter the global configuration mode.

```
device# configure terminal
```

2. Configure a LAG virtual interface which allows you to enter the LAG virtual interface mode or multi-LAG virtual interface mode.

```
device(config)# interface lag 11
device(config-lag-if-lg11)#
```

The following example shows multi-LAG virtual interface configuration.

```
device(config)# interface lag 1 lag 5 lag 2
device(config-lag-mif-lg1-lg2,lg5)#
```

You can configure the properties of the LAG on the LAG virtual interface and the changes made to the LAG virtual interface is propagated to all ports in the LAG.

The following options are supported under LAG virtual interface.

```
device(config-lag-if-lg111)# acl-logging
device(config-lag-if-lg11)# acl-mirror-port ethernet 3/1/1
device(config-lag-if-lg11)# authentication
device(config-lag-if-lg11)# arp inspection trust
device(config-lag-if-lg11)# bandwidth 10000
device(config-lag-if-lg11)# broadcast limit 1000 kbps
device(config-lag-if-lg11)# dhcp snooping trust
device(config-lag-if-lg11)# dhcp6 snooping trust
device(config-lag-if-lg11)# dot1x port-control auto
device(config-lag-if-lg11)# ethernet loopback
device(config-lag-if-lg11)# ipv6-neighbor inspection trust
device(config-lag-if-lg11)# loop-detection
device(config-lag-if-lg11)# mac filter-group 1
device(config-lag-if-lg11)# mac-learn-disable
device(config-lag-if-lg11)# mac-authentication auth-filter 1
device(config-lag-if-lg11)# max-vlan 16
device(config-lag-if-lg11)# monitor both
device(config-lag-if-lg11)# multicast limit 1000 kbps log
device(config-lag-if-lg11)# openflow enable
device(config-lag-if-lg11)# packet-inerror-detect 1000
device(config-lag-if-lg11)# port-name abc
device(config-lag-if-lg11)# protected-port
device(config-lag-if-lg11)# pvst-mode
device(config-lag-if-lg11)# pvstplus-protect
device(config-lag-if-lg11)# restart-vsrp-port 10
device(config-lag-if-lg11)# route-only
device(config-lag-if-lg11)# source-guard enable
device(config-lag-if-lg11)# spanning-tree
device(config-lag-if-lg11)# spanning-tree 802-1w admin-pt2pt-mac
device(config-lag-if-lg11)# spanning-tree 802-1w admin-edge-port
device(config-lag-if-lg11)# spanning-tree root-protect
device(config-lag-if-lg11)# spanning-tree designated-protect
device(config-lag-if-lg11)# speed-duplex
device(config-lag-if-lg11)# stp-bpdu-guard
device(config-lag-if-lg11)# stp-protect
device(config-lag-if-lg11)# tag-profile enable
device(config-lag-if-lg11)# trust dscp
device(config-lag-if-lg11)# unknown-unicast limit 1000 kbps
device(config-lag-if-lg11)# vlan-config add all-tagged
```

Configuring a Layer 3 Link Aggregation Group (LAG)

Configuring a Layer 3 Link Aggregation Group (LAG).

FastIron devices with Layer 3 images support Layer 3 LAGs, which are used for routing and not switching. Perform the following steps to enable routing on a LAG:

1. In the global configuration mode, run the **interface lag** command to enter the LAG virtual interface configuration mode.

```
device(config)# interface lag 55
```

2. Run the **route-only** command to disable switching and enable routing on the LAG.

```
device(config-lag-if-lg55)# route-only
```

3. Run the **ip address** command to assign an IP address for the LAG.

```
device(config-lag-if-lg55)# ip address 25.0.0.2/24
```

The following example shows the creation of a dynamic LAG that is used for routing on a FastIron device with Layer 3 image.

```
device(config)# lag "ruckus-LAG" dynamic id 55
device(config-lag- ruckus-LAG)# ports ethernet 4/1/4 ethernet 1/1/1 ethernet 2/1/3 ethernet
3/1/4
device(config-lag- ruckus-LAG)# exit
device(config)# interface lag 55
device(config-lag-if-lg55)# route-only
device(config-lag-if-lg55)# ip address 25.0.0.2/24
```

Configuring an LACP timeout

In a dynamic or keep-alive LAG, a port's timeout can be configured as short (3 seconds) or long (120 seconds). After you configure a port timeout, the port remains in that timeout mode even it is up or down.

All the ports in a LAG should have the same timeout mode. This requirement is checked when the LAG is enabled on the ports. For example, to configure a port for a short LACP timeout, use the following commands.

```
device(config)# lag blue dynamic id 1
device(config-lag-blue)# lacp-timeout short
LAG blue un-deployed successfully!
LAG blue deployed successfully!
device(config-lag-blue)#
```

If you specify neither **long** nor **short** keywords during configuration, the state machine operates based on the standard IEEE specification as its default behavior. The original IEEE specification says that the state machine starts with short the timeout and moves to the long timeout after the LAG is established. However, sometimes a vendor's implementation always uses either the short timeout or the long timeout without changing the timeout. RUCKUS provides this command so that you can configure RUCKUS devices to interoperate with other vendor's devices.

NOTE
This configuration is applicable to the configuration of dynamic or keep-alive LAGs only.

Specifying the LAG threshold for a LAG group

You can configure the RUCKUS device to disable all of the ports in a LAG group when the number of active member ports drops below a specified threshold value. When a LAG is shut down because the number of ports drops below the configured threshold, the LAG is kept intact and it is re-enabled if enough ports become active to reach the threshold. For example, if a LAG group has 8 ports, and the threshold for the LAG group is 5, then the LAG group is disabled if the number of active ports in the LAG group drops below 5. If the LAG group is disabled, then traffic is forwarded over a different link or LAG group.

NOTE
This configuration is only applicable for static LAGs.

For example, the following commands establish a LAG group consisting of 4 ports, then establish a threshold for this LAG group of 3 ports.

```
device(config)# lag blue static id 1
device(config-lag-blue)# ports ethernet 1/3/1 to 1/3/4
device(config-lag-blue)# trunk-threshold 3
```

In this example, if the number of active ports drops below 3, then all the ports in the LAG group are disabled.

When a LAG is shut down because the number of ports drops below the configured threshold, the LAG is kept intact and it is re-enabled if enough ports become active to reach the threshold.

> **NOTE**
> The trunk-threshold command should be configured only at one end of the trunk. If it is set on both sides, link failures will result in race-conditions and the will not function properly.

Disabling ports within a LAG

You can disable an individual port within a LAG using the disable command within the LAG configuration as shown in the following.

```
device(config)# lag blue static id 1
device(config-lag-blue)# disable ethernet 1/3/1
```

To disable a port belonging to a keep-alive LAG, you need to configure from the interface level.

```
device(config-lag-test)# interface ethernet 1/7/8
device(config-if-e1000-1/7/8)# disable
device(config-if-e1000-1/7/8)#
```

Enabling ports within a LAG

You can enable an individual port within a LAG using the enable command within the LAG configuration as shown in the following.

```
device(config-lag-blue)# enable ethernet 1/3/1
```

To enable a port belonging to a keep-alive LAG, you need to configure from the interface level.

```
device(config-lag-test)# interface ethernet 1/7/8
device(config-if-e1000-1/7/8)# enable
device(config-if-e1000-1/7/8)#
```

Deleting a port from a currently operational LAG

Ports can be deleted from a currently operational LAG. However, when deleting ports from an operational LAG you must consider the following:

- If removal of a port will result in the trunk threshold value becoming greater than the number of ports in the LAG, the port deletion will be rejected.
- When you remove a port from an operational LAG, the port is disabled automatically.

To delete port 1/3/1 which is in the "enabled" state from a LAG named "blue", use the following command:

```
device(config)# lag blue static id 1
device(config-lag-blue)# no ports ethernet 1/3/1
```

Monitoring LAG virtual interface and individual LAG port

Once a LAG is created, monitoring across all ports of the LAG can be configured on the LAG virtual interface. You can configure the device to monitor individual ports in a LAG including Ethernet, or named ports. You can monitor each member ports individually. If a new port is added to a LAG and if the entire LAG is monitored, the new port will also be mirrored by the same port monitoring traffic across the entire LAG.

> **NOTE**
> You can use only one mirror port for each monitored LAG port.

To monitor LAG virtual interface, run the following commands.

```
device(config)# mirror-port ethernet 3/1/1
device(config)# lag blue dynamic id 1
device(config-lag-blue)# ports ethernet 1/1/1 to 1/1/2 ethernet 2/1/3 to 2/1/4
device(config)# interface lag 1
device(config-lag-if-lg1)# monitor both
device(config-lag-if-lg1)# exit
device(config)# show mirror
Mirror port 3/1/1
  Input monitoring      : (U1/M1)   1   2
  Input monitoring      : (U2/M1)   3   4
  Input monitoring      : (LAG)     1
  Output monitoring     : (U1/M1)   1   2
  Output monitoring     : (U2/M1)   3   4
  Output monitoring     : (LAG)     1
```

To monitor traffic on an individual port in a LAG group, run the following commands.

```
device(config)# lag blue static id 1
device(config-lag-blue)# ports ethernet 1/1/1 ethernet 1/1/47
device(config-lag-blue)# monitor ethe-port-monitored 1/1/47 ethernet 1/1/15 output
```

Assigning a name to a port within a LAG

You can assign a name to an individual port within a LAG using the **port-name** command within the LAG configuration as shown in the following.

```
device(config)# lag test dynamic id 1
device(config-lag-test)# ports ethernet 1/1/1 to 1/1/3
device(config-lag-test)# port-name "RUCKUS lag" ethernet 1/1/1
```

The *name* variable specifies the port name. The name can be up to 255 characters long.

> **NOTE**
> Port name with space must be enclosed within double quotation marks.

Use the **ethernet** option with the appropriate *stack/slot/port* variable to apply the specified name to an Ethernet port within the LAG.

Allowable characters for LAG names

When creating a LAG name, you can use spaces in a file or subdirectory name if you enclose the name in double quotes. For example, to specify a subdirectory name that contains spaces, enter a string such as the following: "a long subdirectory name". The maximum length for a string is 64 characters.

The following characters are valid in file names:

- All upper and lowercase letters
- All digits

Any of the following special characters are valid:

- $
- %
- '
- -
- _
- .
- @

- ~
- `
- !
- (
-)
- {
- }
- ^
- #
- &

Enabling sFlow forwarding on a port in a LAG

You can enable sFlow forwarding on an individual port within a LAG using the **sflow-forwarding** command within the LAG configuration as shown in the following example.

```
device(config)# lag blue static id 1
device(config-lag-blue)# ports ethernet 1/3/1 to 1/3/4
device(config-lag-blue)# sflow forwarding ethernet 1/3/1
```

Use the **ethernet** option with the appropriate *stack/slot/port* variable to specify a Ethernet port within the LAG that you want to enable sFlow forwarding for.

Use the **port-name** option with the appropriate *name* variable to specify a named port within the LAG that you want to enable sFlow forwarding for.

For a keep-alive LAG, sFlow can be enabled only at the interface level and not at a lag context. To configure sFLow for an interface belonging to the keep-alive lag, configure directly under the interface.

```
device(config-lag-test)# interface ethernet 1/7/8
device(config-if-e1000-1/7/8)# sflow forwarding
device(config-if-e1000-1/7/8)#
```

Setting the sFlow sampling rate for a LAG

You can set the sFlow sampling rate for a LAG using the **sflow sample** command within the LAG configuration as shown in the following.

```
device(config)# lag blue static id 1
device(config-lag-blue)# ports ethernet 1/3/1
device(config-lag-blue)# sflow sample 512
```

For a keep-alive LAG, you need to configure sFlow sampling at the interface level and not within the LAG configuration.

```
device(config-lag-test)# interface ethernet 1/7/8
device(config-if-e1000-1/7/8)# sflow sample 512
device(config-if-e1000-1/7/8)#
```

IP assignment within a LAG

Layer 3 static or dynamic LAG support IP assignment. All the configurations has to be done on the LAG virtual interface.

The following is a sample configuration:

```
lag lag_dist_a_1 dynamic id 15
 ports ethe 1/1/1 to 1/1/12
 !
```

```
router vrrp
!
interface lag 15
ip address 192.168.10.1 255.255.255.0
ip vrrp vrid 1
 backup priority 50 track-priority 10
 ip-address 192.168.1.10
 activate
```

Renaming an existing LAG

You can change the name of an existing LAG without causing any impact on the functionality of the LAG.

You can rename the LAG using the **update-lag-name** command within the LAG configuration mode. The new name provided must be unique and unused. The LAG configuration mode will exit after successful name update.

```
device(config)# lag blue static id 1
device(config-lag-blue)# update-lag-name blue1
INFORMATION: Lag blue is updated to new name blue1
```

Displaying LAG information

You can display LAG information for a RUCKUS ICX device in either a **full** or **brief** mode.

The following example displays the **brief** option of the **show lag** command.

```
device# show lag brief
Total number of LAGs:          2
Total number of deployed LAGs: 2
Total number of trunks created:2 (126 available)
LACP System Priority / ID:     1 / 609c.9fbc.bf14
LACP Long timeout:             120, default: 120
LACP Short timeout:            3, default: 3
LAG            Type   Deploy Trunk Intf     Port List
tosp12         dynamic  Y    1     lg1      e 1/1/5 e 1/1/7
tosp16         static   Y    2     lg2      e 1/1/6 e 1/1/8
```

The following example displays the full option of the **show lag** command.

```
device# show lag
Total number of LAGs:          2
Total number of deployed LAGs: 2
Total number of trunks created:2 (126 available)
LACP System Priority / ID:     1 / 609c.9fbc.bf14
LACP Long timeout:             120, default: 120
LACP Short timeout:            3, default: 3
=== LAG "tosp12" ID 1 (dynamic Deployed) ===
LAG Configuration:
   Ports:         e 1/1/5 e 1/1/7
   Port Count:    2
   Lag Interface: lg1
   Trunk Type:    hash-based
   LACP Key:      20001
Deployment: HW Trunk ID 1
Port       Link    State    Dupl Speed Trunk Tag Pvid Pri MAC             Name
1/1/5      Down    None     None None  1     No  1    0   609c.9fbc.bf14

1/1/7      Disable None     None None  1     No  1    0   609c.9fbc.bf14

Port       [Sys P] [Port P] [ Key ] [Act][Tio][Agg][Syn][Col][Dis][Def][Exp][Ope
]
1/1/5          1        1   20001   Yes   S   Agg  Syn  No   No   Def  No   Dwn
1/1/7          1        1   20001   Yes   S   Agg  Syn  No   No   Def  No   Dwn
 Partner Info and PDU Statistics
Port          Partner         Partner     LACP      LACP
             System ID         Key     Rx Count  Tx Count
```

```
1/1/5    1-0000.0000.0000        4        0         0
1/1/7    1-0000.0000.0000        6        0         0
=== LAG "tosp16" ID 2 (static Deployed) ===
LAG Configuration:
   Ports:         e 1/1/6 e 1/1/8
   Port Count:    2
   Lag Interface: lg2
   Trunk Type:    hash-based
Deployment: HW Trunk ID 2
Port       Link    State   Dupl Speed Trunk Tag Pvid Pri MAC             Name
1/1/6      Down    None    None None  2     No  1    0   609c.9fbc.bf14

1/1/8      Down    None    None None  2     No  1    0   609c.9fbc.bf14
```

The following example displays the LAG virtual interface properties.

```
device# show interfaces lag 1
Lag lg1 is down, line protocol is down
Configured speed Auto, actual None, configured duplex fdx, actual none
Member of L2 VLAN ID 1, port is untagged, port state is None
BPDU guard is Disabled, ROOT protect is Disabled, Designated protect is Disabled
STP configured to ON, priority is level0, mac-learning is enabled
Openflowis Disabled, OpenflowHybrid mode is Disabled
Mirror disabled, Monitor disabled
Mac-notification is disabled
Member of active trunk ports 1/1/10,lg1, Lag Interface is lg1
Member of configured trunk ports 1/1/10,lg1, Lag Interface is lg1
No port name
300 second input rate: 0 bits/sec, 0 packets/sec, 0.00% utilization
300 second output rate: 0 bits/sec, 0 packets/sec, 0.00% utilization
0 packets input, 0 bytes, 0 no buffer
Received 0 broadcasts, 0 multicasts, 0 unicasts
0 input errors, 0 CRC, 0 frame, 0 ignored
0 runts, 0 giants
0 packets output, 0 bytes, 0 underruns
Transmitted 0 broadcasts, 0 multicasts, 0 unicasts
0 output errors, 0 collisions
Relay Agent Information option: Disabled
```

The following example displays the LAG virtual interface properties in brief.

```
device# show interfaces brief lag 11
Port Link State DuplSpeed Trunk Tag PvidPriMAC Name
lg11 Up Forward Full 3G 11 No 1 5 cc4e.24b4.2208
```

The following example displays the LAG statistics in brief.

```
device# show statistics brief lag 11 ethernet 1/1/1 ethernet 1/1/2 ethernet 1/1/3
Port In Packets Out Packets In Errors Out Errors
1/1/1 579796975 579766803 0 0
1/1/2 3091857541 3091894422 0 0
1/1/3 648306647 648679359 0 0
lg11 4319961163 4320340584 0 0
TOTAL 8639922326 8640681168 0 0
```

The following example displays the LAG statistics.

```
device# show statistics lag 11
LAG Counters:
InOctets737501513146 OutOctets737434067904
InPkts1969927245 OutPkts1970065542
InBroadcastPkts1189300210 OutBroadcastPkts1189300758
InMulticastPkts604719045 OutMulticastPkts780764786
InUnicastPkts0 OutUnicastPkts0
InBadPkts0
InFragments0
InDiscards0 OutErrors0
CRC 0 Collisions 0
InErrors0 LateCollisions0
InGiantPkts0
```

```
InShortPkts0
InJabber0
InFlowCtrlPkts0 OutFlowCtrlPkts0
InBitsPerSec2833412080 OutBitsPerSec2833412080
InPktsPerSec1207587 OutPktsPerSec1207717
InUtilization75.00% OutUtilization75.00%
```

The following example displays the running config of LAG virtual interface.

```
device# show running-config interface lag 11
interface lag 11
loop-detection shutdown-disable
route-only
ipaddress 1.1.1.1 255.255.255.0
priority 5
trust dscp
!
```

Enabling LAG hardware failover

LAG hardware failover reduces the time of packet loss if a LAG member is down, with minimal software intervention, using loopback on the down port. LAG hardware failover is disabled by default and is supported only on RUCKUS ICX 7850 and RUCKUS ICX 7750 devices.

NOTE
LAG should be undeployed to configure the **failover all** command.

Enter the **failover all** command in the LAG configuration mode to enable LAG hardware failover. **failover next** enables failover on the next port in LAG. .

In this example, the LAG **failover all** command is enabled on all ports.

```
device(config)# lag one dynamic id 2
device(config-lag-one)# failover all
```

Preboot eXecution Environment boot support

The Preboot eXecution Environment (PXE), also known as Pre-Execution Environment, is an environment to boot devices using a network interface independent of data storage devices (such as hard disks) or installed operating systems. Consider an environment in which a PXE-capable host forms a dynamic LAG with a FastIron device. After the host successfully boots and runs an operating system, the LACP initiates negotiation to form the dynamic LAG for network access. To boot from the network, the host must be able to connect with the FastIron device initially without a dynamic LAG. To enable this, you can configure PXE boot support on one of the member ports of a dynamic LAG. This ensures that the port is logically operational as soon as you connect this port to the host, even when the dynamic LAG is not operating. At this stage, the port is in "force-up" mode and the **show lag** command shows the operational status "Ope" of this port as "Frc". Once the host successfully boots from the network using this port, the dynamic LAG can form to connect the host to the network with the LAG link. Even if the dynamic LAG fails later, this port is brought back to "force-up" mode and remains logically operational.

Enabling PXE boot support on a port

- The port should be an edge port on which you have not configured protocols such as STP, MRP, and UDLD.

You can configure the member port of a dynamic LAG to be logically operational even when the dynamic LAG is not operating. This enables PXE boot support on this port.

NOTE
You can enable PXE boot support on only one member port of a dynamic LAG.

Run the **force-up ethernet** command in dynamic LAG configuration mode.

The following example shows PXE boot support enabled on member port 3/1/1 of a dynamic LAG R4-dyn.

```
device(config)# lag R4-dyn dynamic id 1
device(config-lag-R4-dyn)# force-up ethernet 3/1/1
```

User-configured peer information per LACP

RUCKUS ICX devices allow users to define their desired peers under the dynamic LAG configuration if they do not want the default first LACP trunk port to be defined as the LAG's peer information record.

In certain cases, when ports of one dynamic LAG are connected to two different LACP peers (different system IDs, or same system ID with different key values), the device forms one LACP trunk per dynamic LAG and the other port is moved to the error disabled state. In a dynamic LAG, each member port stores a record of its peer's LACP information (system priority, system ID, and system key) from the latest LACPDU it received. This information is known as the port's peer information record. Because all member ports of an LACP trunk share the same local and peer information, the dynamic LAG's peer information record can be any one of its unique LACP trunk port's peer information record (system priority, system ID, or system key). If a dynamic LAG has no associated LACP trunk, its peer information record is stored as NULL.

The **peer-info** command is used to configure the peer system ID and system key for a single dynamic LAG.

The following example specifies the desired LACP peer under the dynamic LAG configuration to be defined as the LAG's peer information record.

```
device(config-lag-DUT1)# peer-info sys-mac 609c.609c.609c sys-pri 10 key 29999
Config Peer info (system_priority=10,system_id=609c.609c.609c,system_key=29999) will replace existing
dynamic Peer info (system_priority=1,system_id=609c.9f26.8d20,system_key=20001) for lag 1
```

NOTE
When there is no user configuration, the system makes sure there is only one LACP trunk within one dynamic LAG. It allows the first LACP trunk port's LACP peer information record to be defined as the LAG's peer information record.

NOTE
Run the **show lag** command to view information about the LACP peer's partner system ID (priority and MAC address) and partner system key.

Dynamic LACP syslog messages

The syslog messages in the following table are generated when dynamic LACP is configured in the system.

TABLE 11 Dynamic LACP syslog messages

Syslog message	Definition
`<14>1d12h07m57s:System: dynamic lag interface 2/1/12's peer info (priority=1,id=0024.3821.5600,key=10000) mis-matches with lag's peer info (priority=1,id=0024.3821.5600,key=480), set to mismatch Error`	The port 2/1/12 is set to the mismatch error state.
`System: dynamic lag 100, has new peer info (priority=1, id=0024.3821.5600,key=480) (LACPduRcvd)\n`	The system creates a new peer information record for dynamic LAG 100.

Resilient hashing

Resilient hashing is a load balancing method to minimize the destination path remapping in case of LAG link failure. Resilient hashing works in conjunction with static hashing algorithm.

Static hashing is a conventional method of distributing the traffic within a LAG uniformly so that the volume of traffic sent to every physical link in a LAG is approximately the same. A LAG's member link is selected by calculating a hash-based on packet headers and a subsequent modulo operation based on the number of physical links in the trunk group. If one of the LAG member links fail, due to module number change, the static hashing algorithm might choose a new member link even for those flows which were not hashed to the failed link. The change in the mapping of the destination path may cause traffic disruption in terms of packet loss or packets wrongly delivered even for the flows that were not hashed to the failed link of the LAG.

Resilient hashing addresses the limitation of static hashing (where destination path remapping for traffic flows going out of non-affected member links of a LAG) by using a flow table for selecting an outgoing port of a LAG for a particular flow.

NOTE
Resilient hashing is supported on RUCKUS ICX 7750 and RUCKUS ICX 7650 devices only.

Resilient hashing provides the following benefits:

- When a member link of a LAG goes down, it does not affect the flows bound to the remaining working member links of the LAG.
- When a new member link is added to a LAG, the destination path remapping is minimized by redistributing some of the existing flows to the new member link.
- Resilient hashing can be used in data center deployments where it is critical for the network to deliver packets in order during LAG link failures.

The following table explains the destination path results for static and resilient hashing.

TABLE 12 Destination path outcome for static hashing and resilient hashing

Size of the trunk group	Static hashing	Resilient hashing	Remarks
4	10 % 4 = 2 Flow is going out of the LAG member link at index 2.	Flow is assigned to a LAG member based on the flow set table (outgoing LAG member port at index 10 (10 & 127) is selected for this flow.	The size of the original trunk group is 4.
3	10 % 3 = 1 The same flow will go out of LAG member link at index 1.	Flow is still assigned to the same member link of the LAG (assuming that the LAG member port that went down was not carrying this flow)	One member is deleted.
5	10 % 5 = 0 The same flow will go out of LAG member at index 0.	There is a minimal distribution of flows from existing member LAG links to the newly added member link.	One more member is added to the link. The trunk group size is 5 now.

Resilient hashing limitations

Resilient hashing has the following limitations:

- Resilient hashing supports uniform traffic distribution only until one of the link fails and another link takes up the traffic. It does not guarantee uniform distribution of traffic across all members of a LAG since it depends on the flow set table in the hardware and the traffic pattern.
- It is applicable to unicast traffic only.
- In a stacking system, symmetric hashing does not work on resilient hashing LAGs. This is a hardware limitation since the resilient hashing flow set table is programmed differently on each of the stack units.

Configuring resilient hashing

To configure resilient hashing, perform the following tasks:

1. Create a static or dynamic LAG using the existing LAG command line interfaces.

```
device(config)# lag test static
device(config-lag-test)# ports ethernet 1/1/1 to 1/1/3
```

2. In the LAG mode, enter the **trunk-type** command to enable resilient hashing on the LAG.

```
device(config-lag-test)# trunk-type resilient-hash
```

The following example enables resilient hashing on the "test" LAG.

```
device(config)# lag test static id 11
device(config-lag-test)# ports ethernet 1/1/1 to 1/1/3
device(config-lag-test)# trunk-type resilient-hash
```

The following warning messages are displayed when symmetric hashing and resilient hashing exist together in the system.

- User configures symmetric load balancing on a device that also has the resilient hashing enabled.

```
Warning: system has resilient-hash lags, symmetric hashing may not work for RH lags.
```

- User deploys resilient hashing LAG on a device that already has symmetric hashing enabled.

```
Warning: system has symmetric hashing enabled, symmetric hashing may not work on resilient-
hash lag <LAG_NAME>
```

Multi-Chassis Trunking

- Multi-Chassis Trunking Overview 85
- Basic MCT Configuration 92
- Cluster Client Automatic Configuration 98
- MCT Failover Scenarios 99
- Layer 2 Behavior with MCT 101
- Layer 3 Behavior with MCT 110
- Displaying MCT information 125
- Single-Level MCT Configuration Example 129
- Two-Level MCT Configuration Example 132
- MCT Configuration Examples Using STP 137
- STP Configuration Example on MCT Cluster Devices 141

Multi-Chassis Trunking Overview

Multi-Chassis Trunking (MCT) is an alternative to spanning tree protocols. Spanning tree is a technology that protects the network against loops by blocking necessary ports, and having the network span to relearn topologies when one link fails in a network. MCT is a technology that allows two MCT-supporting switches to cluster together and appear as a single logical device. Trunking is a technology that allows multiple links of a device to appear as one logical link. The combination of MCT and trunking allows for creating a resilient network topology that utilizes all links in the network, creating an ideal network topology for latency-sensitive applications.

Standard static or dynamic LACP trunks provide link-level redundancy and increased capacity. However, trunks do not provide device-level redundancy. If the device to which the trunk is attached fails, the entire trunk loses network connectivity. Two devices are needed for network resiliency with trunked links to both devices. With spanning tree, one of these trunks would be blocked from use until the failure of the other trunk is detected, taking from 1 to 30 seconds and potentially adding latency and jitter, not only on the affected devices locally, but throughout the span topology. With MCT, member links of the trunk are split and connected to two clustered MCT-supporting switches. MCT has integrated loop detection, which allows all links to be active. If a failure is detected, traffic is dynamically allocated across the remaining links. The failure detection and allocation of traffic occur in sub-second time, without impact on the rest of the network.

MCT inherits all of the benefits of a trunk group and allows multiple physical links to act as a single logical link. The resulting available bandwidth is an aggregate of all the links in the group. Traffic is shared across the links in the group using dynamic flow-based load balancing, and traffic is moved to a remaining link group in sub-seconds if a failure occurs on one of the links. MCT eliminates the single point of failure that exists at the device level when all links of a trunk terminate on the same device without the overhead associated with spanning tree. MCT diverts a subset of the links to a second device to provide redundancy and sub-second fault detection at the device level.

How MCT Works

The following table shows a basic MCT configuration. The MCT originates at a single MCT-unaware server or switch and terminates at two MCT-aware devices.

FIGURE 26 How MCT Works

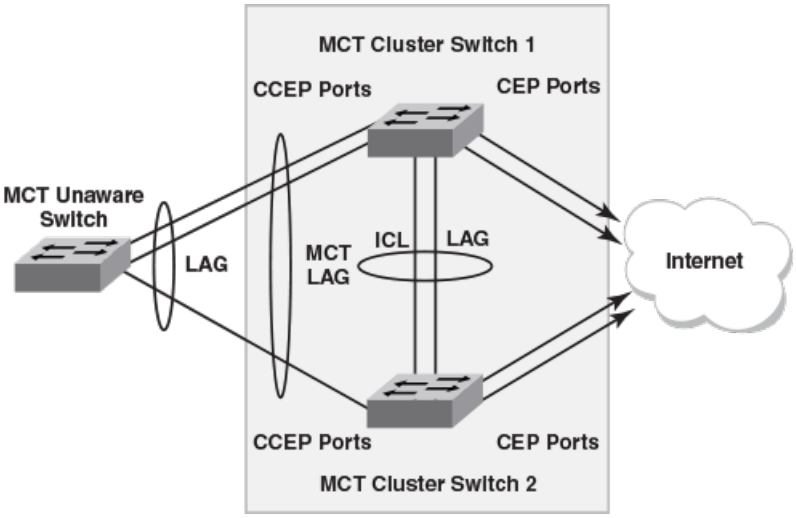

The MCT process involves the following processes:

- Sub-second failover occurs if a link, module, control plane, or device fails.
- Sub-second failover operates at the physical level.
- Layer 2 and Layer 3 forwarding (when using fast path forwarding) is done at the first hop regardless of the VRRP-E state.
- Load balancing is flow based (it does not involve VLANs sharing across network links).
- Resiliency is supported regardless of the traffic type (Layer 3, Layer 2, or non-IP legacy protocols).
- Interaction with Metro Ring Protocol (MRP) builds larger resilient Layer 2 domains.
- Device-level redundancy is provided in addition to link and modular redundancy.
- Traffic received from an ICL port is not forwarded to the Cluster Client Edge Ports (CCEPs) if the MCT peer device has the ability to reach the same cluster client.
- Traffic received from non-ICL ports is forwarded the same way as non-MCT devices.
- Known unicast traffic received on Cluster Edge Ports (CEPs) or ICL ports is forwarded to the destination port.
- For broadcast, unknown unicast, and multicast(BUM) traffic received on ICL ports, the forwarding behavior depends on the peer MCT device's ability to reach the same client.
- Broadcast, unknown unicast, and multicast (BUM) traffic received from a CCEP is forwarded as usual, by default, flooding the entire VLAN.
- The cluster ID must be unique when there are multiple clusters interconnected in a topology. For example, in a cascaded Stage 2 MCT cluster, the cluster ID on a stage 1 pair of switches must be different from the cluster ID on a stage 2 pair of switches.

MCT Terminology

- Cluster Client Edge Port (CCEP): A physical port or trunk group interface on an MCT cluster device that is connected to client devices.
- Cluster Edge Port (CEP): A port on an MCT cluster device that belongs to the MCT VLAN and connects to an upstream core switch or router but is neither a CCEP nor an ICL.
- Cluster Communication Protocol (CCP): A proprietary protocol that provides reliable, point-to-point transport to synchronize information between MCT cluster devices. It provides the default MCT control path between the two peer devices. CCP comprises two main components: CCP peer management and CCP client management. CCP peer management deals with establishing and maintaining a TCP transport session between peers, while CCP client management provides event-based, reliable packet transport to CCP peers.

- Inter-Chassis Link (ICL): A single-port or multiport 1-GbE, 10-GbE, or 40-GbE LAG between the two MCT cluster devices. It provides the control path for CCP for the cluster and also serves as the data path between the two devices.
- MCT cluster: A pair of devices (switches) that is clustered together using MCT to appear as a single logical device. The devices are connected as peers through an Inter-Chassis Link (ICL).
- MCT cluster client: A device that connects with MCT cluster devices through static or dynamic trunks. It can be a switch or an endpoint server host in the single-level MCT topology or another pair of MCT devices in a multi-tier MCT topology.
- MCT cluster device: One of the two devices in an MCT cluster.
- MCT peer device: From the perspective of an MCT cluster device, the other device in the MCT cluster.
- MCT VLANs: VLANs on which MCT cluster clients are operating. Any VLAN that has an ICL port is an MCT VLAN, even if it does not have any clients.
  - MCT keep-alive VLAN: The VLAN that provides a backup control path if the ICL goes down.
  - MCT session VLANs: The VLAN used by the MCT cluster for control operations. CCP runs over this VLAN. The interface can be a single link or a LAG. In a LAG, it must be configured on the LAG virtual interface. The MCT session VLAN subnet is not distributed in routing protocols using redistribute commands.
- RBridge ID: An RBridge ID is a value assigned to MCT cluster devices and clients that uniquely identifies them and helps associate the source MAC address with an MCT device.

MCT Data Flow

MCT can be deployed in a single-level configuration that includes two MCT cluster devices or in a cascading configuration, where a pair of MCT cluster devices operate as switches, and another pair of cluster devices operates as routers. Refer to Single-Level MCT Configuration Example on page 129 for a single-level illustration and configuration example, and Two-Level MCT Configuration Example on page 132 for a two-level or cascading configuration example.

Broadcast, unknown unicast, and multicast traffic from a client through a CCEP

1. Traffic originates at the client.
2. Because the link between the client switch and the MCT cluster is a trunk, the traffic travels over one physical link. In the example shown in the following figure, the traffic travels over the link toward cluster device 2. The traffic enters the MCT cluster through the CCEP of cluster device 2.
3. The traffic is sent to any local CEPs and CCEPs. It passes to the peer cluster device over the ICL link, where it is sent to the peer device's local CEPs.
4. Traffic does not pass back down to the client through the CCEP.

FIGURE 27 MCT Data Flow - BUM Traffic from CCEP

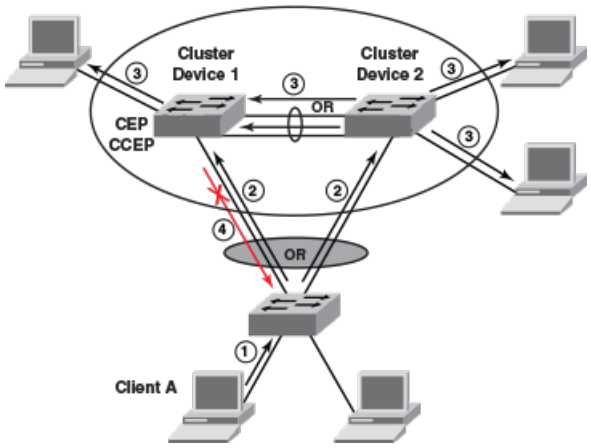

Unicast traffic from a client through a CCEP to a CEP

1. Traffic originates at the client.
2. Because the link between the client switch and the MCT cluster is a trunk, the traffic travels over one physical link. As shown in the following figure, the traffic travels over the link toward cluster device 2. The traffic enters the MCT cluster through the CCEP of cluster device 2.
3. Depending on the destination, the traffic may pass over the ICL link to the other cluster device. In the following figure, the destination is on cluster device 1, so the traffic is forwarded out to the ICL port.
4. The traffic passes out to the destination.

FIGURE 28 MCT Data Flow - Unicast Traffic from CCEP

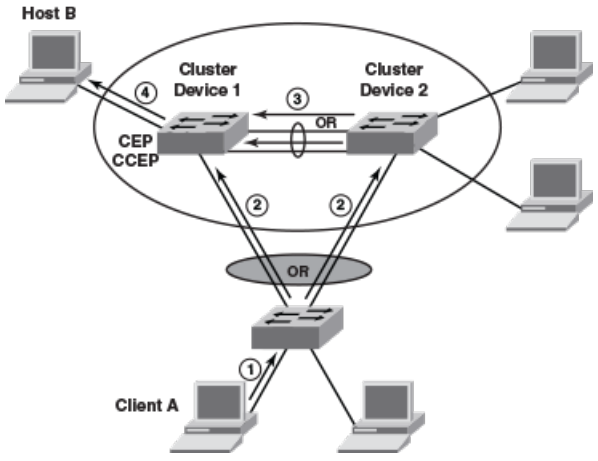

Broadcast, unknown unicast, and multicast traffic from a client through a CEP

1. Traffic originates at the client and enters one of the MCT cluster devices through a CEP.
2. As shown in the following figure, the traffic is sent to the peer cluster device through the ICL link and is also sent to any local CCEPs and CEPs. Once traffic is received on the peer cluster device, it will be sent to its local CEPs.

3. Traffic does not pass back down to the client through the CCEP.

FIGURE 29 MCT Data Flow - BUM traffic from a CEP

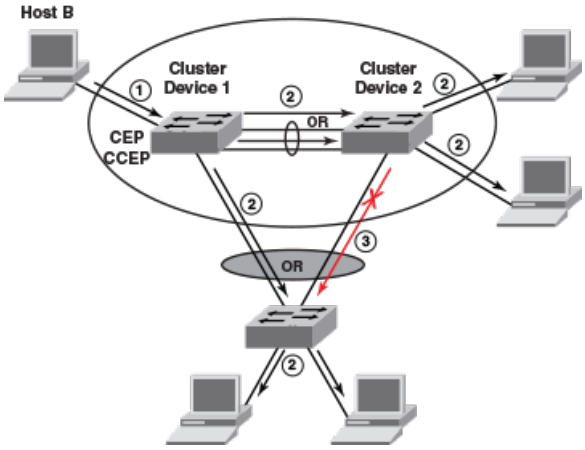

Unicast traffic from a client through a CEP to another CEP or a CCEP

1. Traffic originates at the client and enters one of the cluster devices through the CEP, as shown in the following figure.
2. Depending on the destination, the traffic may pass over the ICL link to the other cluster device, or it may be sent to a local CCEP.
3. The traffic passes out to the destination.

FIGURE 30 MCT Data Flow - Unicast Traffic from a CEP

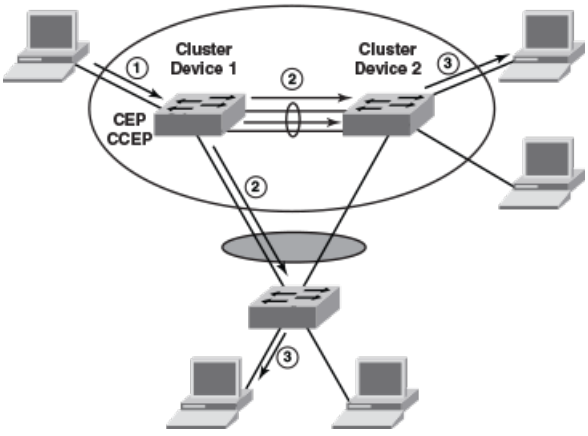

Port failure on the cluster device

1. A CCEP on the cluster device that received the unicast or BUM traffic fails.
2. As shown in the following figure, the traffic is automatically redirected to the other MCT cluster device over the ICL and on to its destinations through CCEPs.

FIGURE 31 MCT Data Flow with Port Failure

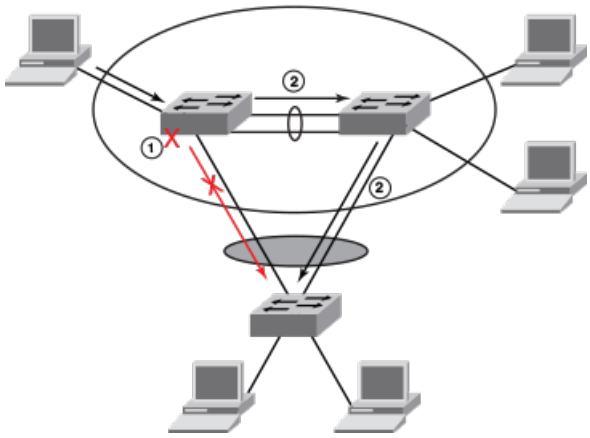

MCT and VLANs

MCT relies on the following VLAN types:

- Session VLAN: Provides the control channel for CCP. RUCKUS recommends keeping only ICL ports in the session VLAN. A virtual interface must be configured on the session VLAN for the router image.
- Keep-alive VLAN: Provides a backup control path if the ICL goes down (optional, but strongly recommended).
- MCT VLAN: Serves the customer data traffic. An ICL must belong to every MCT VLAN to provide a data path between two cluster devices. When an ICL is added to a VLAN, it becomes an MCT VLAN.

MCT Feature Interaction and Unsupported Features

The following FastIron features are supported with MCT. All security features are locally significant and are not synchronized across an MCT cluster.

- LACP on the Cluster Client Edge Port (CCEP).
- VRRP on the CCEP.
- MRP and MRP II, with the restriction that the ICL port cannot be the secondary port of the MRP ring.
- Flooding features (such as VLAN CPU protection and multicast flooding) on MCT VLANs.
- Unidirectional Link Detection (UDLD) as independent boxes (configured independently).
- ARP as independent boxes (configured independently).
- STP and RSTP.
- Ingress ACLs on all MCT ports, except for ICL ports. Egress ACLs are supported only on MCT Cluster Edge Ports (CEPs). Egress ACLs are not supported on MCT CCEPs.
- QoS and MAC filters and profiles with the same configuration on both cluster devices.
- IPv4 ACLs and rate limits. If the rules are applied on the CCEPs, the same rules must be applied to the CCEP ports on both cluster devices.
- Layer 3 routing. VE with IP address assignment is supported on CCEPs for VRRP.
- Static multiport MAC.
- Multiport authentication and 802.1X on CEPs.
- Static MAC address configuration. Static MAC addresses are programmed on both local and remote peers as static entries.

- DAI and DHCP snooping for clients connected through CEPs. They must be configured independently on both cluster devices.
  - If the trusted ports are off the CCEP, the **arp inspection trust** or **dhcp snoop trust** command must be used on the CCEPs and ICL ports.
  - DHCP and ARP entries are created on both MCT cluster devices if the flow traverses both the CCEP and ICL.
- Hitless failover. If the failover operation is performed with a cluster configuration, the TCP session is re-established. The MAC addresses from the cluster peer devices are revalidated and programmed accordingly.
- Hitless upgrade. If the upgrade operation is performed with a cluster configuration, the TCP session is re-established. The MAC addresses from the cluster peer devices are revalidated and programmed accordingly. Hitless upgrades are only supported between minor (letter, patch) releases, for example, FastIron 08.0.70a to 08.0.70b. Hitless upgrades between major releases, for example, FastIron 08.0.70 to 08.0.80, are not supported.

The following FastIron features are not supported with MCT:

- ACLs on VLAN session (ICL) ports.
- LACP on ICL.
- MSTP, VSRP, and RIP.
- MSDP, Anycast RP, and embedded RP.
- IPv6, VRRP-E (IPv6), and VRRPv3.
- GRE on the ICL VE interfaces.
- DAI on the CCEPs.
- Egress ACLs on MCT CCEPs.
- Host security features (port MAC security, multiport authentication, 802.1X, DAI, DHCP snooping) on CCEPs.
- Multiport ARP on ICL or CCEPs.
- Port MAC security is not supported on CEPs. However, the FastIron devices do not restrict the port MAC security commands to be enabled on the CEPs.
- Web authentication on MCT VLANs.

MCT Board Type Compatibility

Multi-Chassis Trunking (MCT) requires similar functionality between peer devices and uses a software version check to ensure compatibility. A type-length-value (TLV) is introduced to differentiate the board types used in some hardware devices that can run the same software versions, but have different functional capabilities.

The RUCKUS ICX 7650 device and the RUCKUS ICX 7850 device can both run the same software versions although some of their capabilities are different. If these devices are used as MCT peers, some basic MCT functionality, such as the MAC table size, can be different between the peers. To avoid any issues, the device board type information is added in new fields as a TLV in the version information message used during the handshake signal and this identifies the hardware. The board type check is performed before the Cluster Communication Protocol (CCP) is activated to prevent any unnecessary connection operations.

No configuration command line interface (CLI) commands have been introduced, but the **show cluster** command output has been updated to display a message to explain when the CCP is down because the board type does not match with the peer device, as shown in the following example.

```
 Last Reason for CCP Down: Image version or board type doesn't match with peer
 Peer State: CCP Down (CCP is Down)
 Reason for CCP Down: Image version or board type doesn't match with
peer
```

Basic MCT Configuration

This section describes how to set up a basic MCT configuration. The following figure shows a basic MCT topology, which applies to Layer 2 and Layer 3. MCT can also be supported with VRRP or VRRP-E.

FIGURE 32 Basic MCT Configuration

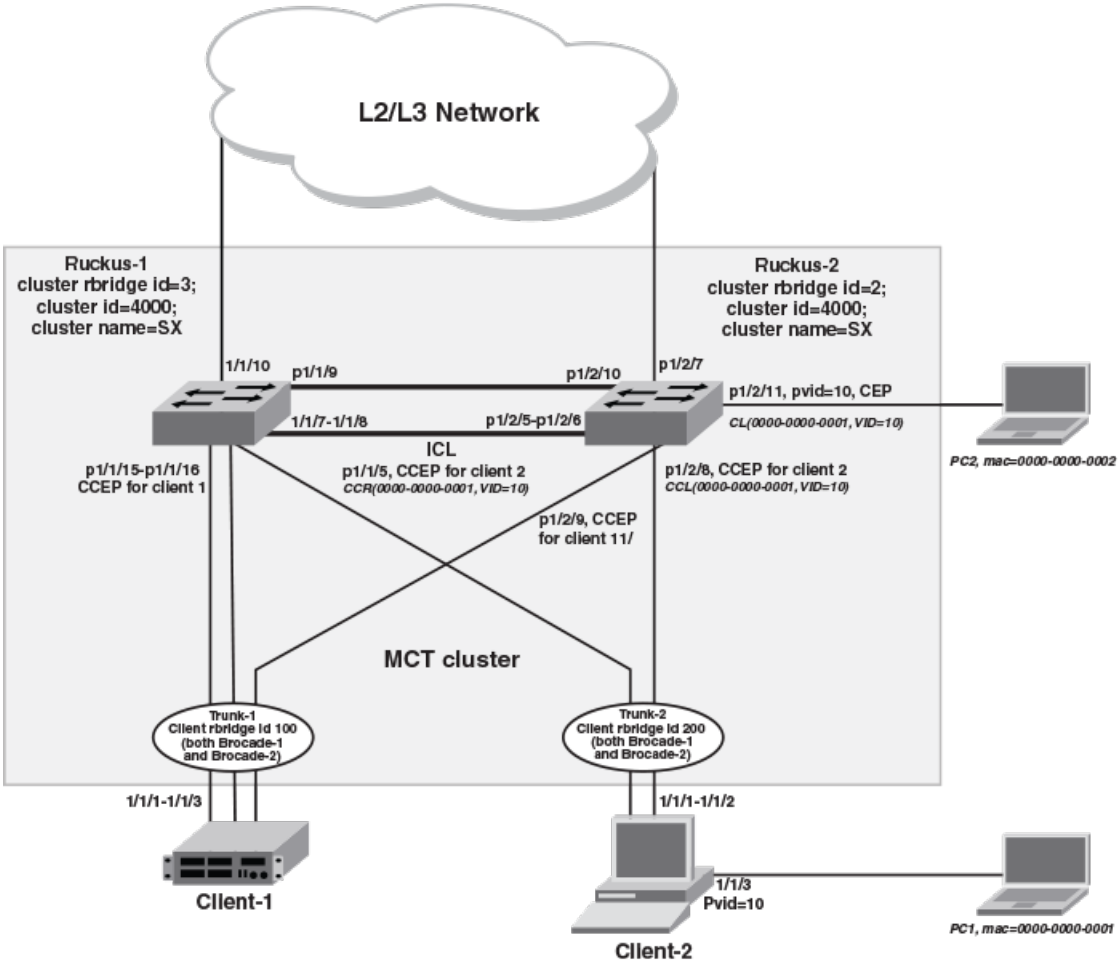

MCT configuration considerations

- Configuring flow-based MAC address learning and MCT on the same device is not supported.
- When running STP, the STP state must be the same on both cluster devices. For additional information on running STP with MCT, refer to MCT Layer 2 Protocols on page 103 and to related configuration examples.
- Management VLAN configuration is not supported on MCT cluster devices running a switch image. MCT is not supported on switches with the management VLAN enabled.
- One ICL can be configured per device, and a device can be in only one cluster.
- The software version in both cluster devices must be exactly the same for the cluster to function.
- An ICL port must not be an untagged member of any VLAN.

- It is recommended that you set up ICL as a static LAG with at least two ports. This provides port-level redundancy and higher bandwidth for cluster communication.
- ICL ports must be part of MCT VLANs and session VLANs.
- An ICL cannot be a regular port link or an LACP trunk. It must be a single or multiple port static LAG.
- MAC learning is disabled on ICL ports for all VLANs.
- MDUP synchronizes all MAC entries for VLANs served by an ICL link.
- In any MCT configuration, there are two different cluster-related IDs, the Cluster ID and the Cluster RBridge ID. The Cluster ID uniquely identifies a cluster. All cluster devices in the same MCT cluster have the same Cluster ID. The Cluster RBridge ID uniquely identifies a cluster device within the cluster. To avoid conflicts, ensure that the Cluster ID and the Cluster RBridge ID are unique within an MCT configuration and cannot be confused with each other.
- The cluster ID must be the same on both cluster devices.
- The Cluster RBridge ID must not conflict with any Client RBridge ID or with the peer RBridge ID.
- The Client RBridge ID is unique and must be the same on cluster devices.
- RUCKUS recommends keeping only ICL ports in the session VLAN during operation.
- MCT supports all the ports configured in a LAG. The maximum number of ports supported per LAG is 16 on all ICX devices, except ICX 7150 which supports a maximum of 8 ports per LAG.
- An ICL interface cannot be configured as the CCEP in any client.
- BPDU guard and root guard configurations must be identical on both cluster devices.
- Because egress PCL is configured on CCEPs, an egress ACL cannot be configured on them. All types of ingress ACLs, DoS attack prevention, and so on can still be configured on those ports.
- RUCKUS recommends that you configure a keep-alive VLAN as a separate link (not ICL). The keep-alive VLAN provides a backup control path when CCP goes down.

Differences in Configuring MCT for the Switch and Router Image

There are some differences in the MCT configuration for the switch image versus the router image:

- On a switch image, STP is enabled by default for all the VLANs; however, for MCT, Layer 2 protocols such as STP and RSTP must not be enabled on the session VLAN. Therefore, STP must be disabled explicitly for the session VLAN. STP is automatically disabled in the router image.
- Virtual Ethernet (VE) cannot be configured on a session VLAN in a switch image, but an IP address is needed for the cluster devices to communicate by way of CCP. Therefore, in a switch image, the configured management IP address is used to establish communication between the cluster devices.
- The management IP addresses in each of the cluster devices must be configured in the same subnet. If the IP addresses are in different subnets, ARP does not resolve the addresses, and MCT may not work. ARP for the peer cluster devices is always learned on the ICL port or trunk, so any management traffic between the two devices always goes through the ICL ports.

  NOTE
  CLI may vary somewhat among the different RUCKUS ICX platforms. These variations are not documented in the configuration examples provided in this chapter, but are documented in the *RUCKUS FastIron Command Reference*.

Configuring MCT

This section provides basic configuration steps, which should be completed in the specified order.

Step 1: Configure ICL and LAGs for Client Devices on page 94

Step 2: Configure the MCT VLAN, MCT Session VLAN, and Recommended MCT Keep-alive VLAN on page 94

Step 3: Configuring the Cluster on page 95

Step 4: Configuring Clients on page 96

After completing these steps, you can verify the configuration by running the **show cluster** command. Refer to Displaying MCT information on page 125.

Step 1: Configure ICL and LAGs for Client Devices

You can configure static or dynamic LAGs for cluster clients. Static LAGs are manually configured aggregate links containing multiple ports. Dynamic LAGs use Link Aggregation Control Protocol (LACP) to maintain aggregate links over multiple ports. LACP PDUs are exchanged between ports on each device to determine if the connection is still active. The LAG then shuts down any port whose connection is no longer active.

NOTE
ICL LAGs support only static trunks.

To configure an ICL static LAG for Ruckus-1 and Ruckus-2 devices in the topology of Basic MCT Configuration on page 92, enter the following commands.

```
Ruckus-1(config)# lag MCT_lag1 static id 2
Ruckus-1(config-lag-MCT_lag1)# ports ethernet 1/1/7 to 1/1/8

Ruckus-2(config)# lag MCT_lag1 static id 2
Ruckus-2(config-lag-MCT_lag1)# ports ethernet 1/2/5 to 1/2/6
```

To configure a dynamic LAG for a client device, enter the following commands for each MCT cluster device.

```
Ruckus-1(config)# lag client_lag2 dynamic id 5
Ruckus-1(config-lag-client_lag2)# ports ethernet 1/2/11
```

Step 2: Configure the MCT VLAN, MCT Session VLAN, and Recommended MCT Keep-alive VLAN

To create the MCT session VLAN and recommended MCT keep-alive VLAN for Ruckus-1 in the topology of Basic MCT Configuration on page 92, enter the following commands.

```
Ruckus-1(config)# vlan 3001 name MCT-keep-alive
Ruckus-1(config-vlan-3001)# tagged ethernet 1/1/9
Ruckus-1(config-vlan-3001)# exit
Ruckus-1(config)# vlan 3000 name Session-VLAN
Ruckus-1(config-vlan-3000)# tagged lag 2
Ruckus-1(config-vlan-3000)# no spanning-tree
```

For routers, add the following commands.

```
Ruckus-1(config-vlan-3000)# router-interface ve 3000
Ruckus-1(config)# interface ve 3000
Ruckus-1(config-vif-3000)# ip address 10.1.1.3/24
```

For switches, add the following commands.

```
Ruckus-1(config)# ip address 10.1.1.3/24
```

To create a session VLAN and keep-alive VLAN for device Ruckus-2, enter the following commands.

```
Ruckus-2(config)# vlan 3001 name MCT-keep-alive
Ruckus-2(config-vlan-3001)# tagged ethernet 1/2/10
Ruckus-2(config-vlan-3001)# exit
Ruckus-2(config)# vlan 3000 name Session-VLAN
Ruckus-2(config-vlan-3000)# tagged lag 2
Ruckus-2(config-vlan-3000)# no spanning-tree
```

For routers, add the following commands.

```
Ruckus-2(config-vlan-3000)# router-interface ve 3000
Ruckus-2(config)#interface ve 3000
Ruckus-2(config-vif-3000)# ip address 10.1.1.2/24
```

For switches, add the following commands.

```
Ruckus-2(config)# ip address 10.1.1.2/24
```

To implicitly configure the MCT VLAN and add the ICL as a tagged member of the VLAN, enter the following commands.

```
Ruckus-1(config)# vlan 1000 name MCT-VLAN-example
Ruckus-1(config-vlan-1000)# tagged ether 1/1/15 to 1/1/16 lag 2
```

Step 3: Configuring the Cluster

Configuring a local cluster requires the cluster ID and RBridge ID for the local switch or router.

Configuration of the peer device involves the peer's IP address, RBridge ID, and ICL specification.

The following task steps configure device Ruckus-1 for the cluster in the topology of Basic MCT Configuration on page 92. The peer device, Ruckus-2 configuration is shown in the Example section below the task.

1. Enter global configuration mode.

   ```
   device# configure terminal
   ```

2. Configure a cluster name and ID.

   ```
   device(config)# cluster ICX 4000
   ```

   If you do not specify a cluster name, the device will automatically generate the cluster name as CLUSTER-X.

3. Configure the RBridge ID.

   ```
   device(config-cluster-ICX)# rbridge-id 3
   ```

   The RBridge ID must be different from the cluster RBridge and any other client in the cluster.

4. Assign a VLAN to the session.

   ```
   device(config-cluster-ICX)# session-vlan 3000
   ```

   The MCT member VLAN is defined as any VLAN of which the ICL is a member.

5. Configure the keep alive for the VLAN.

   ```
   device(config-cluster-ICX)# keep-alive-vlan 3001
   ```

6. Configure the ICL.

   ```
   device(config-cluster-ICX)# icl SX-MCT lag 2
   ```

7. Configure the peer ICL parameters.

   ```
   device(config-cluster-ICX)# peer 10.1.1.2 rbridge-id 2 icl SX-MCT
   ```

8. Deploy the configuration.

   ```
   device(config-cluster-ICX)# deploy
   ```

The following example configures device Ruckus-2 for the cluster in the topology of Basic MCT Configuration on page 92.

```
device# configure terminal
Ruckus-2(config)# cluster ICX 4000
Ruckus-2(config-cluster-ICX)# rbridge-id 2
Ruckus-2(config-cluster-ICX)# session-vlan 3000
Ruckus-2(config-cluster-ICX)# keep-alive-vlan 3001
Ruckus-2(config-cluster-ICX)# icl SX-MCT lag 2
Ruckus-2(config-cluster-ICX)# peer 10.1.1.3 rbridge-id 3 icl SX-MCT
Ruckus-2(config-cluster-ICX)# deploy
```

Proceed to the next task.

Step 4: Configuring Clients

Configuring cluster clients requires the client name, RBridge ID, and CCEP.

This task describes how to configure clients manually. For instructions on automatic client configuration, see Setting Up Cluster Client Automatic Configuration on page 98.

In the network shown in the Basic MCT Configuration on page 92, Client-1 has a three-port LACP trunk (1/1/1-1/1/3), while Client-2 has a two-port static trunk (1/1/1-1/1/2) towards the MCT cluster.

To configure Client-2 on Ruckus-1 in the topology of Basic MCT Configuration on page 92, enter the following steps. The configuration of Client-2 on Ruckus-2, see the Example section after the following task steps.

1. Enter global configuration mode.

   ```
   device# configure terminal
   ```

2. Configure a cluster name and ID.

   ```
   device(config)# cluster ICX 4000
   ```

3. Assign a client name.

   ```
   device(config-cluster-ICX)# client client-2
   ```

   The client name can be different on the different cluster devices.

4. Configure the RBridge ID.

   ```
   device(config-cluster-ICX-client-2)# rbridge-id 200
   ```

   The RBridge ID must be different from the cluster RBridge and any other client in the cluster.

5. Configure the physical port or static trunk as the client CCEP. For Client-2 it is Ethernet interface 1/1/5.

   ```
   device(config-cluster-ICX-client-2)# client-interface ethernet 1/1/5
   ```

6. Deploy the configuration.

   ```
   device(config-cluster-ICX-client-2)# deploy
   ```

The following example shows how to configure Client-2 on Ruckus-2 in the topology of Basic MCT Configuration on page 92.

```
device-1# configure terminal
Ruckus-2(config)# cluster ICX 4000
Ruckus-2(config-cluster-ICX)# client client-2
Ruckus-2(config-cluster-ICX-client-2)# rbridge-id 200
Ruckus-2(config-cluster-ICX-client-2)# client-interface ethernet 1/2/8
Ruckus-2(config-cluster-ICX-client-2)# deploy
```

Forcing a Port Up in a Basic MCT Configuration

In a static trunk environment, Preboot eXecution Environment (PXE) images are too small for most operating systems to leverage LACP during the boot process. As a result, during a PXE build process, traffic sent by the server is dropped, and the build process can fail.

To correct this situation, a port on an ICX 7750 device connected to a server that is configured as an MCT client can be set to a “force-up” state so that even if the LACPDU is not received from the server, the connected port is up and forwards packets.

> **NOTE**
> When multiple ports from the same server are connected to an ICX 7750, the port on the ICX 7750 connected to the PXE-capable port on the server is the port that must be configured to the force-up state. The PXE-capable port varies from server to server.

Keep the following points in mind when configuring a port to a force-up state:

- A port can only be configured as the force-up port before the client is deployed.
- Only one port in an LACP link aggregation group (LAG) can be configured as the force-up port. If you configure multiple ports as force-up, the following error message is displayed: `Error: port portno is already configured as force-up port.`
- When a port is configured for force-up and the server boots for the first time, the port does not wait for any LACPDU but immediately begins to forward packets.
- If the port receives an LACPDU, it bundles with other ports and forms a LAG. The server is operational.
- If the force-up port goes down while in a LAG, the port continues to perform as a normal LACP trunk, and the server remains operational, with some ports down.
- If the force-up port stops receiving LACPDUs, the port ignores the time-out and remains operational.

To configure the LACP client in a force-up state, use the **client-interface link-aggregation force-up ethernet** command at the client level.

The following example shows output from the show lag command after the link aggregation information for a port has been configured in a force-up state.

```
Router# show lag id 163

Total number of LAGs:          11
Total number of deployed LAGs: 11
Total number of trunks created:11 (113 available)
LACP System Priority / ID:     1 / 748e.f88f.2222
LACP Long timeout:             120, default: 120
LACP Short timeout:            3, default: 3

=== LAG "CCEP-163" ID 163 (dynamic Deployed) ===
LAG Configuration:
   Ports:         e 1/1/47 to 1/1/48
   Port Count:    2
   LAG Interface: lg163
   Trunk Type:    hash-based
   LACP Key:      20163
Deployment: HW Trunk ID 3
This is a Multi Chassis Trunk: (System Id: 0180.c200.0001, Key: 30163)

Port    Link    State   Dupl Speed Trunk Tag Pvid Pri MAC             Name
1/1/47  Up      Forward Full 1G    163   Yes N/A  0   748e.f88f.2222
1/1/48  Down    None    None None  163   Yes N/A  0   748e.f88f.2222

Port   [Sys P] [Port P] [ Key ] [Act][Tio][Agg][Syn][Col][Dis][Def][Exp][Ope]
1/1/47       1        1   20163   Yes   L   Agg  Syn  Col  Dis  Def  No   Frc
1/1/48       1        1   20163   Yes   L   Agg  Syn  No   No   Def  No   Dwn


 Partner Info and PDU Statistics
Port       Partner         Partner     LACP      LACP
          System MAC         Key     Rx Count  Tx Count
1/1/47    0000.0000.0000       46     5475      5558
1/1/48    0000.0000.0000       47     5477      5487
```

Cluster Client Automatic Configuration

Client configuration includes setting the client name, client RBridge ID (unique identification for each client), client interface (CCEP), and deployment settings on both MCT cluster devices. With up to 150 clients per cluster, manual configuration can take a considerable amount of time.

Cluster client automatic configuration saves the time that would be required to complete the entire configuration manually.

The following limitations apply to cluster client automatic configuration:

- Cluster client automatic configuration is designed for generating new clients, not for updating an existing client.
- A single client span across multiple devices is not supported (cascading MCT). For example, the configuration of cascading MCT through cluster client automatic configuration is not supported.
- Multiple clients on the same device are not supported.
- LACP client interface auto-detection is supported only for devices running FastIron 07.0.40 and later releases.
- When hash collisions occur (RBridge ID collisions), cluster client automatic configuration reports errors, and manual intervention is required.

For cluster client automatic configuration to work, the following prerequisites are required on the cluster side:

- The cluster must be configured on both MCT cluster devices.
- An MCT VLAN must be configured on both MCT cluster devices.
- The trunk group configuration must be removed from the client interfaces.
- The client interfaces must be up and operational.
- The cluster ID must be unique when there are multiple clusters interconnected in a topology. For example, in a cascaded stage 2 MCT cluster, the cluster ID on a stage 1 pair of switches must be different from the cluster ID on a stage 2 pair of switches.

The following prerequisites are required on the client side:

- VLAN and trunk group configuration must be completed.
- Link Level Discovery Protocol (LLDP) must be enabled.

Setting Up Cluster Client Automatic Configuration

Complete the following steps to configure cluster client automatic configuration.

1. Enable the client auto-detect ports on both MCT devices.

   ```
   device(config-cluster-ICX)# client-auto-detect ethernet 1/1/15-1/1/16
   ```

   In the port list, specify all the CCEPs for all potential clients.

2. Start the client auto-detect process on both cluster devices.

   ```
   device(config-cluster-ICX)# client-auto-detect start
   ```

   Within one minute, the system reports information and errors (if there are mismatches such as an LACP configuration mismatch). You can fix the mismatch while the process is running. Use the **config-deploy-all** option with this command as an alternative to the **client-auto-detect config** command. The **client-auto-detect config** command also configures automatically detected clients into the running configuration and deploys all of the automatically detected clients.

3. Check and fix the automatically detected clients.

```
device(config-cluster-ICX)# show cluster cluster-ICX client-auto-detect

cluster cluster-ICX 4000
 rbridge-id 3
 session-vlan 3000
 icl ICX-MCT lag 2
peer 10.1.1.2 rbridge-id 2 icl ICX-MCT
client-auto-config ethe 1/1/15 to 1/1/16 ethe 1/2/8 ethe 1/2/9 eth 1/2/10
 client-auto-config start
deploy
 client AUTO-Router002438769e00
  rbridge-id 3593
  client-interface ethe 1/1/15
!
```

NOTE
At this point, the client configuration does not appear in the running configuration and cannot be modified. Static trunk and LACP configurations are not effective yet.

4. Configure automatically detected clients into the running configuration.

```
device(config-cluster-ICX)# client-auto-detect config
```

All automatically configured client information is now published into the running configuration, and the static trunk configuration is generated, created, and deployed. LACP is started. By default, clients are in the non-deployed state and the CCEP is put into the disabled state. Ports that are successfully programmed as CCEPs are removed from the auto-configuration-enabled port list. If the port list is empty, which means all ports are configured into clients successfully, the automatic configuration process stops. The original LLDP configuration is restored. Otherwise, the automatic configuration process continues only on the ports still left in the list.

MCT Failover Scenarios

The following scenarios describe what happens if specific elements in the MCT configuration fail:

- Client interface on one of the MCT cluster devices goes down.
  - Traffic switches to the other cluster device with minimal traffic loss.
- MCT cluster device goes down.
  - When an MCT cluster device goes down (for example, due to a power failure), the traffic fails over to the other MCT cluster device.
- Hitless failover occurs.
  - The MCT CCEPs stay up during hitless switchover, failover, or upgrade. Link protocols such as UDLD and LACP on CCEPs do not flap. Traffic disruption is minimal (sub-second). The MCT CCP connection flaps once, and MAC is re-synced between the peer devices.
  - The CCP goes down and comes back up again once the hitless failover is completed.
- ICL interface or CCP goes down (keep-alive VLAN is configured).
  - If a keep-alive VLAN is used, the devices in the cluster can communicate even if the ICL goes down. If the peer device is reachable over the keep-alive VLAN, the MCT peers perform the active/standby negotiation per client. After negotiation, the standby shuts down its client ports, and the active client ports continue to forward the traffic.
  - The active/standby negotiation is performed per MCT client on the basis of RBridge ID and client local or remote accessibility. If the client is reachable from both MCT devices, the lower RBridge ID becomes the active device. If the client can be accessed only from one of the MCT devices, the cluster device on which it is reachable becomes the active device.
  - If the peer device cannot be reached over the keep-alive VLAN, then both cluster devices keep forwarding.

NOTE
RUCKUS recommends using keep-alive VLANs with the MCT configurations. This provides alternative access if the ICL interface goes down. However, a keep-alive VLAN must not be configured when **bpdu-flood-enable** is configured. Refer to MCT Layer 2 Protocols on page 103.

- ICL interface or CCP goes down (keep-alive VLAN is not configured).
  - When the keep-alive VLAN is not configured, both cluster devices keep forwarding. Use the **client-isolation strict** command to disable the client interface as soon as the ICL link goes down to completely isolate the client.
- Double failures occur (for example, the ICL goes down and the client interface goes down on one of the MCT cluster devices).
  - Multiple failures could cause traffic to drop, even if there is a physical path available.

NOTE
The keep-alive link is supported on the ICX 7750 in a single STP or MSTP environment, even though the ICX 7750 has the BPDU flood-enable feature built in. This is because BPDU flood-enable in the ICX 7750 is hardware-enabled.

Cluster Failover Mode

The following failover modes can be configured with MCT:

- Fast-failover (default): As soon as the ICL interface goes down, the CCP goes down. All the remote MAC addresses are flushed.
- Slow-failover: Even if the ICL interface goes down, the CCP waits for the hold time before taking the CCP down. Remote MAC addresses are flushed only when the CCP is down.

To disable the fast-failover mode, enter the **peer disable-fast-failover** command.

```
device(config-cluster-SX)# peer 10.1.1.3 disable-fast-failover
```

Client Isolation Mode

NOTE
You must create the same isolation mode on both cluster devices. The CLI allows modification of the client isolation mode on MCT cluster devices even when the cluster is deployed.

MCT cluster devices can operate in two modes. Both peer devices must be configured in the same mode.

Loose mode (default): When the CCP goes down, the peer device performs the active/standby negotiation. After negotiation, the standby shuts down its peer ports, but the active peer ports continue to forward traffic if a keep-alive VLAN is configured.

If a keep-alive VLAN is not configured, both peer devices become active, and both of the client ports stay up.

```
device(config-cluster-ICX)# client-isolation loose
```

Strict mode: When the CCP goes down, the interfaces on both the cluster devices are administratively shut down. In this mode, the client is completely isolated from the network if the CCP is not operational.

```
device(config-cluster-ICX)# client-isolation strict
```

Shutting Down All Client Interfaces

Use the **client-interfaces shutdown** command when performing a hitless upgrade operation. This command can be used to shut down all the local client interfaces in the cluster, which results in failover of traffic to the peer device.

```
device(config-cluster-ICX)# client-interfaces shutdown
```

Using the Keep-Alive VLAN

CCRR messages are used to exchange information between peer devices. When the CCP is up, CCRR messages are sent over the CCP. When the CCP client cannot be reached or the ICL is down, you can use the **keep-alive-vlan** command under the cluster context so CCRR messages are periodically sent over the keep-alive VLAN. Only one VLAN can be configured as a keep-alive VLAN. The keep-alive VLAN cannot be a member VLAN of the MCT, and this VLAN can be tagged or untagged.

> **NOTE**
> Keep-alive VLAN configuration is not allowed when the client isolation mode is strict. When a keep-alive VLAN is configured, client isolation mode cannot be configured as strict.

```
device(config-cluster-ICX))# keep-alive-vlan 10
```

When the CCP is down, the following results occur.

- If the keep-alive VLAN is configured, CCRR messages are sent every second over that VLAN.
- When CCP is down and a keep-alive VLAN is configured, active/standby selection is based on the following criteria:
  - If one device's CCEPs are up and the peer's CCEPs are down, the peer with the local CCEPs down becomes the standby.
  - Otherwise, the device with the higher RBridge ID becomes the standby.
- If no packets are received from the peer device for a period of three seconds, the peer is considered down.
- If a keep-alive VLAN is not configured and both the peer devices are up, both peers keep forwarding traffic independently.

Setting Keep-Alive Timers and Hold Time

To specify the keep-alive timers and hold time for the peer devices, enter the **peer timers keep-alive** command.

```
device(config-cluster-ICX))# peer 10.1.1.3 timers keep-alive 40 hold-time 120
```

When using this command ensure that the peer IP address must be in the same subnet as the cluster management interface.

> **NOTE**
> The keep-alive VLAN and keep-alive timers are not related. The keep-alive timer is used by CCP.

Layer 2 Behavior with MCT

Layer 2 behavior when MCT is configured includes MAC operations, dynamic trunks, port loop detection, and multicast snooping over MCT.

MAC Database Update

Each MAC address is advertised with a cost. Low-cost MAC addresses are given preference over high-cost addresses. MAC addresses that are learned locally are given the highest priority, or the cost of 0, so that they are always selected as the best MAC addresses.

If a MAC address moves from a CCEP port to a CEP port, a MAC move message is sent to the peer, and the peer moves the MAC address from its CCEP ports to the ICL links.

If two MAC addresses have the same cost, the address learned from the lower RBridge ID wins and is installed in the forwarding database (FDB).

MAC addresses in MCT VLANs are updated across the cluster using MAC Database Update Protocol (MDUP) messages.

Cluster MAC types

Cluster Local MAC (CL): MAC addresses that are learned on the MCT VLAN and on CEPs locally. MAC addresses are synchronized to the cluster peer device and are subject to aging.

Cluster Remote MAC (CR): MAC addresses that are learned by way of MDUP messages from the peer device (CL on the peer). The MAC addresses are always programmed on the ICL port and do not age. The CR is deleted only when the CL is deleted from the peer. An MDB entry is created for these MAC addresses with a cost of 1 and is associated with the peer RBridge ID.

Cluster Client Local MAC (CCL): MAC addresses that are learned on the MCT VLAN and on CCEPs. The MAC addresses are synchronized to the cluster peer device and are subject to aging. An MDB entry with a cost of 0 is created for these addresses, and they are associated with the client and cluster RBridge IDs.

Cluster Client Remote MAC (CCR): MAC addresses that are learned by way of MDUP messages from the peer device (CCL on the peer). The MAC addresses are always programmed on the corresponding CCEP and do not age. The CCR is deleted only when the CCL is deleted from the peer. An MDB entry with the cost of 1 is created for the MAC addresses, and they are associated with the client and peer RBridge IDs.

Cluster Multi-Destination Local MAC (CML): A static MAC entry that is configured locally on the MCT VLAN. Any static MAC address configured on the MCT VLAN will have the ICL added by default. Consequently, the address automatically becomes a multi-destination MAC entry. The local configuration generates a local MDB. Any CML entry can still have up to two associated MDBs, one local and one remote. The remote MDB contains the remote static configuration for the same MAC and VLAN. If the dynamic MAC and static configuration coexist, the dynamic MAC address is removed, whether it is learned locally or from MDUP. The port list of a CML entry contains an ICL port, the client ports from the client list in the local configuration and the remote configuration (if it exists), and all locally configured CEPs.

Cluster Multi-Destination Remote MAC (CMR): A static MAC entry that is configured on the MCT VLAN on the peer side and has no associated local configuration. The CMR entry has only the information from the remote MDB. The port list of a CMR entry contains an ICL port and all the client ports from the client list in the remote configuration. When there is a local configuration for the same entry, the CMR is converted to the CML.

MAC aging

Only the local MAC entries are aged on a cluster device. The remote MAC address entries are aged based on explicit MDUP messages only.

The remote MAC addresses learned through MDUP messages are dynamic addresses, but they never age from the FDB.

MAC flush

If the CEP is down, the MAC addresses are flushed, and individual MAC deletion messages are sent to the peer device.

If the local CCEP is down, the MAC addresses are flushed locally, and individual MAC deletion messages are sent to the peer device.

If the **clear mac** command is used, the MDB and FDB are rebuilt.

If the **clear mac vlan** command is used, the local MDB and FDB are rebuilt for the VLAN.

MAC movement happens normally on the local device.

In cases of CEP to CCEP MAC movement, the MAC movement occurs normally on the local device, and all the other MDBs from the peer are deleted to create a new local MDB.

Syncing router MAC addresses to peer MCT devices

The MCT cluster device uses a router MAC address to identify the packets that are addressed to the switch. Such packets may be received by a peer cluster device. The peer device switches packets over the ICL to the local MCT device to be routed properly.

Dynamic Trunks

The MCT client creates a single dynamic trunk group toward the MCT cluster devices. The dynamic trunk group consists of two trunk groups, each of which is configured on one of the MCT devices. A dynamic trunk group runs Link Aggregation Control Protocol (LACP).

For the two dynamic trunk groups of the MCT to behave as a single trunk group from the MCT client's perspective, both of the dynamic trunk groups must have the same LACP system ID and key (referred to as the MCT system ID and MCT key).

NOTE
The LAG IDs are only significant locally and need not match on the two ends of a LAG.
The LACP system ID in the MCT-supporting device normally comes from the port MAC address. To support LACP over MCT, the ID must be obtained in another way. MCT uses a pre-defined algorithm to obtain the ID.

NOTE
Each MCT cluster device has a unique cluster ID and one MCT client ID. The LACP key is predefined from the client ID and cluster ID. The user cannot change the key.
MCT does not involve stacking, and control protocol synchronization is minimal. The LACP runs independently on the cluster devices.

Port Loop Detection

Loop detection can be used in an MCT topology to detect Layer 2 loops that occur due to misconfigurations, for example, on the client side when MCT links are not configured as trunk links on the MCT-unaware client.

In MCT, ICL links must be up at all times to prevent the cluster from going down. These links must not be shut down when a loop is detected in a network. Instead, other available ports (CCEPs) must be shut down. If loop detection BDPUs are received on the ICL port, instead of shutting down the ICL links, all CCEPs are error-disabled, and the user is notified with the following log message.

```
Loop-detection: Packet received on ICL port <port_number> for vlan <vlan_id>. Errdisable CCEPs.
```

Strict mode loop detection can be enabled on ICL ports. In strict mode, a port is disabled only if a packet is looped back to that same port. Strict mode overcomes specific hardware issues where packets are echoed back to the input port. This process assists in detecting hardware faults on ICL ports.

Loop detection can be enabled on MCT and non-MCT VLANs simultaneously. There is no change in loop detection behavior when it is enabled on non-MCT VLANs.

The following example shows how to configure loop detection on MCT and non-MCT VLANS.

```
device(config)# vlan 1905
device(config-vlan-1905)# loop-detection
device(config-vlan-1905)# end
```

MCT Layer 2 Protocols

Keep the following information in mind when configuring Layer 2 protocols with MCT:

- Metro Ring Protocol (MRP)—An ICL interface cannot be configured as an MRP secondary interface or vice versa because the ICL cannot be in a blocking state.

  MRP cannot be enabled on an MCT CCEP or vice versa.
- Spanning Tree Protocol (STP) and Rapid Spanning Tree Protocol (RSTP)—RUCKUS does not recommend configuring STP on MCT VLANs at MCT cluster devices. By, default, the spanning tree is disabled in the MCT VLANs.

  If the network topology creates Layer 2 loops through external connections of MCT clients, STP or RSTP may be enabled on MCT clients to prevent the Layer 2 loops. The MCT cluster devices then perform a pass-through forwarding of STP BPDUs received through its ports in

the MCT VLAN. Refer to MCT Configuration Examples Using STP on page 137 to view deployment scenarios where STP is used on MCT clients to prevent Layer 2 loops.

The MCT cluster devices do not perform pass-through forwarding of untagged STP BPDUs received through its ports in the MCT VLAN. Single STP and IEEE 802.1s (MSTP) are not useful on MCT clients to prevent the Layer 2 loops.

If the network topology creates Layer 2 loops through CEPs, STP or RSTP may be enabled on MCT cluster devices to prevent the Layer 2 loops. But MCT cluster devices are treated as two separate bridges when STP or RSTP is enabled on MCT VLANs. It is not recommended to enable STP or RSTP on the MCT VLANs of cluster devices. Refer to STP Configuration Example on MCT Cluster Devices on page 141 to view deployment scenarios where STP is used on MCT cluster devices to prevent Layer 2 loops.

- The STP or RSTP algorithms have been modified so that the ICL never enters a blocking state. The ICL guard mechanism ensures that if the ICL is about to go into a blocking state, the port on which the superior BPDUs are being received is moved to a blocking state, and the ICL guard timer starts running on it. This timer runs as long as superior BPDUs are received on this interface. As long as this timer runs on an interface, the superior BPDUs are dropped.
- The BLK_BY_ICL STP state indicates that superior BPDUs were received on this interface, which could have led to blocking of the ICL interface, with the result that the CL port guard mechanism has been triggered on this port.
- In an 802.1s MSTP deployment, RUCKUS recommends disabling spanning tree on MCT cluster devices at the global level. MSTP cannot be configured on individual cluster devices.
- Configuring STP/RSTP on MCT VLANs in the cluster devices and enabling STP/RSTP at MCT clients for a pass-through forwarding of STP/RSTP BPDUs received at CCEP ports will not work.
- An MCT cluster can support up to 32 spanning tree instances.

Layer 2 Multicast Snooping over MCT

To support multicast snooping over MCT, the ICL port uses MDUP to synchronize the following information between the cluster devices:

- MAC-forward entries (mcache entries on MCT VLAN)
- IGMP or MLD Join and Leave (control packets on MCT VLAN)
- PIM-SM or PIM6-SM Join and Prune (control packets on MCT VLAN)
- IGMP or MLD dynamic router ports on MCT VLAN

IGMP and MLD Snooping

Snooping can be configured globally or at the VLAN level. Each cluster device in the MCT VLAN can be configured as active or passive. There is no restriction for cluster devices to run active-active or passive-passive configurations.

The following examples show configuration commands for the VLAN level (IGMP and MLD), the global level (IGMP and MLD), and for PIM-SM and PIM6-SM.

- VLAN level (IGMP)

```
device(config)# vlan 100
device(config-vlan-100)# multicast active/passive
```

- VLAN level (MLD)

```
device(config-vlan-100)# multicast6 active/passive
```

- Global level (IGMP and MLD)

```
device(config)# ip multicast active/passive
device(config)# ipv6 multicast active/passive
```

- PIM-SM snooping (configured only on a VLAN and requires IGMP snooping to run in passive mode)

```
device(config)# vlan 100
device(config-vlan-100)# multicast passive
device(config-vlan-100)# multicast pimsm-snooping
```

- PIM6-SM snooping (configured only on a VLAN and requires MLD snooping to run in passive mode)

```
device(config)# vlan 100
device(config-vlan-100)# multicast6 passive
device(config-vlan-100)# multicast6 pimsm-snooping
```

IGMP and MLD Snooping Behavior on MCT Cluster Devices

- Local information is synchronized to the MCT peer device using CCP. The information includes Mcache and FDB entry (on arrival of data traffic), joins and leaves, dynamic router ports, and PIM-SM snooping joins and prunes.
- Native control packets (joins and leaves) that are received are processed by protocol code and are forwarded if necessary.
- All control and data traffic is received on the ICL. The traffic is forwarded out of a CCEP only if the remote CCEP is down; otherwise, it is dropped by the egress filters on the CCEP.
- The ICL is added as an outgoing interface (OIF) by default whenever the CCEP is a source or a receiver. This provides faster convergence during MCT failover.
- For IGMP and MLD joins or leaves:
  - Only control packets received on a CCEP are synced to the MCT peer using CCP.
  - Control packets received on a CEP are not synced to the MCT peer.
- Static groups and static router ports configured on a CCEP are not synced across to the MCT peer. For these features to work correctly, they must be manually configured on the respective CCEPs of both the cluster nodes.

How Failovers are Handled for Layer 2 Multicast over MCT

The following failover scenarios may occur. Refer to MCT Failover Scenarios on page 99 for other types of failover scenarios.

- Local CCEP down event:
  - Outgoing traffic on local CCEP will now go through the ICL and out of the remote CCEP.
  - Incoming traffic on local CCEP will now ingress through the remote CCEP, and then ingress through the ICL locally.
- Local CCEP up event:
  - Outgoing traffic on a remote CCEP (after egressing through the local ICL) will now start going out of the local CCEP.
  - Incoming traffic from a client through the ICL (after ingressing on remote CCEP) will now switch back to the local CCEP (this is true only if the client trunk hashing sends the traffic toward the local CCEP).
- CCP (Cluster communication protocol) down event:
  - All related information (IGMP or MLD group, mcache, dynamic router port, PIM-SM snooping entry) that was synced from the peer device will now be marked for aging locally.
- CCP (Cluster communication protocol) up event:
  - All related information (IGMP or MLD group, mcache, dynamic router port, PIM-SM snooping entry) that was learned locally will be synced to the peer device.

PIM-SM and PIM6-SM Snooping over MCT

- PIM-SM snooping can be configured only on a VLAN. It requires IGMP snooping to be running in passive mode. IPv6 snooping is supported.

- PIM6-SM snooping can be configured only on a VLAN. It requires MLD snooping to be running in passive mode.
- Router ports can be configured on a VLAN or globally. They can be learned dynamically on the port where the query is received or configured statically.
- Both MCT devices must run PIM-SM snooping.
- PIM messages are forwarded by way of the hardware.
- A PIM join or prune is synced to the peer cluster device using CCP.
- A PIM prune is processed only if indicated by the peer cluster device.
- A PIM join or prune received natively on an ICL is ignored.
- A PIM hello is not synced but is received natively on the ICL.
- PIM port or source information is refreshed on both cluster devices by syncing PIM messages. The information ages out if not refreshed.

Forwarding Entries for PIM-SM and PIM6-SM Multicast Snooping

Table 13 and Table 14 list the forwarding entries for PIM-SM and PIM6-SM multicast snooping.

TABLE 13 Forwarding entries (*,G) [a]

Event	MCT-1	MCT-2
No-Join	(*,G)->blackhole	(*,G)->blackhole
(S,G) Join on (MCT-1) CEP	(*,G)->CEP [s] [b]	(*,G)->ICL [s]
(S,G) Join on (MCT-2) CEP	(*,G)->ICL [s]	(*,G)->CEP [s]
(S,G) Join on (MCT-1) CCEP	(*,G)->CCEP [s], ICL [s]	(*,G)->CCEP [s], ICL [s]
(S,G) Join on (MCT-2) CCEP	(*,G)->CCEP[s], ICL [s]	(*,G)->CCEP [s], ICL [s]

a.) *ICL: The ICL port is added as default whenever CCEP is in OIF. The data traffic received from the ICL port will be filtered out by egress filters dynamically programmed on CCEPs.

b.) [s]: denotes sources maintained on port hash-list.

TABLE 14 Forwarding entries (S,G) [a]

Event	MCT-1	MCT-2
No-Join	(S,G)->blackhole	(S,G)->blackhole
Join (MCT-1) CEP	(S,G)->CEP	(S,G)->ICL
Join (MCT-2) CEP	(S,G)->ICL	(S,G)->CEP
Join (MCT-1) CCEP	(S,G)->CCEP, ICL	(S,G)->CCEP, ICL
Join (MCT-2) CCEP	(S,G)->CCEP, ICL	(S,G)->CCEP, ICL

a.) *ICL: The ICL port is added as default whenever CCEP is in OIF. The data traffic received from the ICL port will be filtered out by egress filters dynamically programmed on CCEPs.

Displaying information for multicast snooping

Use the **show ip pimsm-snooping cache** command to display (*,g), (s,g), and OIF information learned by way of PIM join and prune messages.

```
device(config)# show ip pimsm-snooping cache

 OIF Info:
 TR - OIF Belongs to Trunk/LAG, Primary port is displayed
 SG - (*,g)/(s,g) downstream fsm state:
     NI : No Info, J : Join, PP : Prune Pending, CLEAN : cleanup in progress
 RPT - (s,g,rpt) downstream fsm state:
```

```
     NI : No Info, P : Pruned, PP : Prune Pending, Px : Temp step in (*,G)
     join processing, PPx : Temp State in (*,G) processing, CLEAN : cleanup
     in progress.

PIMSM Snoop cache for vlan 503
1    (* 225.0.0.1) Up Time: 1d 19:41:48
    OIF: 1
    TR(e3/13) G : J(194) ET: 210, Up Time: 1d 19:41:48 , ICL, Remote

2    (* 225.1.1.1) Up Time: 5d 18:43:56
    OIFs: 2
    TR(e3/10) G : J(167) ET: 210, Up Time: 5d 18:43:56 , CCEP, Local
    TR(e3/13) G : J(200) ET: 210, Up Time: 1d 19:41:48 , ICL, Remote
```

You can also use the **show ip pimsm-snooping cache** command to display the MCT information if the VLAN is an MCT member.

In the following example, the **show ip multicast cluster** is used. YES indicates that reports or leaves were received locally (processing native control packets).

```
device(config)# show ip multicast cluster group

p-:physical, ST:static, QR:querier, EX:exclude, IN:include, Y:yes, N:no
VL100 : 1 groups, 1 group-port
group p-port          ST   QR life mode source local
1     225.1.1.1  e5/5 no   no  200   EX      0    YES
2     225.1.1.1 e5/10 no   no  200   EX      0    YES
```

In the following example, NO indicates that reports or leaves were received remotely. In this case, a join was received on the CCEP of the MCT peer device. Native control packets were processed by the peer device, and then the entries were synced over MDUP to this cluster device.

```
device(config)# show ip multicast cluster group

p-:physical, ST:static, QR:querier, EX:exclude, IN:include, Y:yes, N:no
VL100 : 1 groups, 1 group-port
group  p-port          ST QR life mode source local
1      225.1.1.1 e1/10 no no  200   EX      0    NO
2      225.1.1.1 e1/10 no no  200   EX      0    NO
```

The following example displays status about the IGMP router port.

```
device(config)# show ip multicast cluster vlan 100

Version=2, Intervals: Query=125, Group Age=260, Max Resp=10, Other Qr=260
VL100: cfg V3, vlan cfg passive, 1 grp, 2 (SG) cache, rtr ports,
router ports: e5/9(260) 100.100.100.1 (local:1, mct peer:0),
e5/4    has    1 groups,
This interface is non-Querier (passive)
default V3 trunk
(local:1, mct peer:0)
```

Use the **show ip multicast cluster pimsm-snooping** command to display detailed information about OIFs added by way of a PIM-SM snooping.

```
device(config)# show ip multicast cluster pimsm-snooping

Example: Port: 1/7/3 (age, port type, ref_count, owner flag, pruned flag)
source: 1/7/3 has 1 src: 11.0.0.5(age, ref_count, owner flag, pruned flag)
owner flag: 0x0: local, 0x1 remote cep, 0x2 remote ccep
vlan 100, has 1 caches.
1 (* 224.10.10.10) has 2 pim join ports out of 2 OIF
1/7/3 (1,ICL), 1/7/5 (1, CCEP)
```

Refer to the *RUCKUS FastIron Command Reference* for information on **show ipv6 multicast cache** and other MLD multicast commands.

Multicast Snooping Configuration Example

The following figure depicts a multicast snooping configuration. Sample configurations follow.

FIGURE 33 Multicast Snooping over MCT

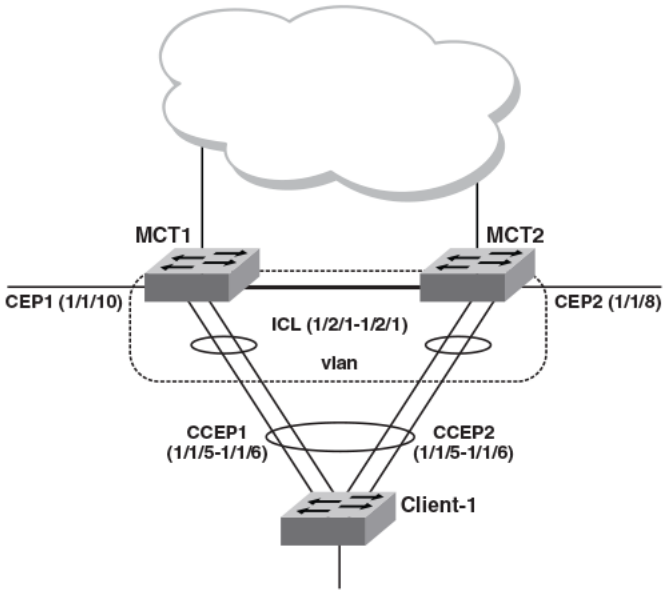

The following example shows the configuration for multicast snooping for the MCT1 cluster device in the previous figure.

```
vlan 100 by port
tagged ethe 1/2/1
untagged ethe 1/1/5 ethe 1/1/6
multicast passive
multicast pimsm-snooping
multicast6 passive
multicast6 pimsm-snooping
!
vlan 3000 name session by port
tagged ethe 1/2/1
router-interface ve 3000
vlan 3001 name keep-alive-vlan
tagged eth 1/1/4
interface ve 3000
ip address 10.1.1.2 255.255.255.0
!
cluster ICX7750 3000
rbridge-id 2
session-vlan 3000
keep-alive-vlan 3001
icl SX-MCT ethernet 1/2/1
peer 10.1.1.3 rbridge-id 3 icl ICX7750-MCT
deploy
client client-1
  rbridge-id 100
  client-interface ethernet 1/1/5
  deploy
!
```

The following example shows the configuration for multicast snooping for the MCT2 cluster device in Figure 33.

```
!
vlan 100 by port
tagged ethe 1/2/1
untagged ethe 1/1/5 ethe 1/1/6
multicast passive
multicast pimsm-snooping
multicast6 passive
multicast6 pimsm-snooping
```

```
!
vlan 3000 name session by port
tagged ethe 1/2/1
router-interface ve 3000
vlan 3001 name keep-alive-vlan
tagged eth 1/2/2
interface ve 3000
ip address 10.1.1.3 255.255.255.0
!
cluster SX 3000
rbridge-id 3
session-vlan 3000
keep-alive-vlan 3001
icl SX-MCT ethernet 1/2/1
peer 10.1.1.2 rbridge-id 2 icl SX-MCT
deploy
client client-1
  rbridge-id 100
  client-interface ethernet 1/1/5
  deploy
!
```

The following example shows the global configuration for multicast snooping for the MCT1 cluster device in Figure 33.

```
vlan 100 by port
tagged ethe 1/2/1
untagged ethe 1/1/5 ethe 1/1/6
!
vlan 3000 name session by port
tagged ethe 1/2/1
router-interface ve 3000
vlan 3001 name keep-alive-vlan
tagged eth 1/2/2
ip multicast active
interface ve 3000
ip address 10.1.1.2 255.255.255.0
!
cluster SX 3000
rbridge-id 2
session-vlan 3000
keep-alive-vlan 3001
icl SX-MCT ethernet 1/2/1
peer 10.1.1.3 rbridge-id 3 icl SX-MCT
deploy
client client-1
rbridge-id 100
client-interface ethernet 1/1/5
deploy
!
```

The following example shows the global configuration for multicast snooping for the MCT2 cluster device in Figure 33.

```
!
vlan 100 by port
tagged ethe 1/2/1
untagged ethe 1/1/5 ethe 1/1/6
!
vlan 3000 name session by port
tagged ethe 1/2/1
router-interface ve 3000
vlan 3001 name keep-alive-vlan
tagged eth 1/2/2
ip multicast passive
interface ve 3000
ip address 10.1.1.3 255.255.255.0
!
cluster SX 3000
rbridge-id 3
session-vlan 3000
keep-alive-vlan 3001
icl SX-MCT ethernet 1/2/1
```

```
peer 10.1.1.2 rbridge-id 2 icl SX-MCT
deploy
client client-1
rbridge-id 100
client-interface ethernet 1/1/5
deploy
```

Layer 3 Behavior with MCT

The following table lists the type of Layer 3 support available with MCT.

TABLE 15 Layer 3 Feature Support with MCT

Feature	Sub-feature	Session VLAN VE	Member VLAN VE	Design Philosophy
ip	access-group[a]	Yes	Yes	Only features that are relevant for MCT management are supported on session VLAN VE.
	address	Yes	Yes	
	arp-age	Yes	Yes	
	bgp	No	Yes	
	bootp-gateway	Yes	Yes	
	directed-broadcast	Yes	Yes	
	encapsulation	Yes	Yes	
	follow	No	No	
	helper-address	Yes	Yes	
	icmp	Yes	Yes	
	igmp	No	No	
	irdp	No	Yes	
	local-proxy-arp	No	Yes	
	metric	No	Yes	
	mtu	Yes	Yes	
	multicast-boundary	No	No	
	ospf	No	Yes	
	pim	No	No	
	pim-sparse	No	Yes	
	policy	No	Yes	
	proxy-arp	No	Yes	
	redirect	No	Yes	
	rip	No	Yes	
	tcp	Yes	Yes	
	tunnel	No	Yes	
	use-acl-on-arp	Yes	Yes	
	vrrp	No	Yes	
	vrrp-extended	No	Yes	

TABLE 15 Layer 3 Feature Support with MCT (continued)

Feature	Sub-feature	Session VLAN VE	Member VLAN VE	Design Philosophy
ipv6		No	No	IPv6 is not supported for MCT management. IPv6 is not supported on member VLAN VE.

a.) *ICL: The ICL port is added as the default whenever a CCEP is in OIF. The data traffic received from the ICL port is filtered out by a dynamically programmed egress filter on the CCEPs.

Layer 3 Unicast Forwarding over MCT

A simple MCT topology addresses resiliency and efficient load balancing in Layer 2 network topologies. Layer 3 technologies can run in an MCT environment too. This allows various Layer 3 technologies to function while leveraging the benefits at the Layer 2 level.

ARP Resolution

ARP resolution for the MCT client is required at the MCT cluster to forward traffic from a CEP to the CCEP. This ARP packet would normally be learned over the CCEP port. However, if the MAC address of the client is not already known on the CCEP, its ARP packet could be temporarily learned over the ICL. When the MAC Database Update Protocol (MDUP) message from the cluster peer device moves the client MAC address from the ICL to the CCEP, the ARP packet is also moved to the CCEP. During this transient time, no client ARP packet can be programmed over the ICL for a long period of time unless the local CCEP port is down.

During this transient time, the Layer 3 traffic gets forwarded toward the MCT peer. If the MCT client triggers an ARP request, it would do so for its Layer 3 next hop IP address, which generally resides on the MCT cluster devices. This address could be the default gateway on the MCT client or it could be learned through dynamic routing. If VRRP or VRRP-E is deployed on the MCT cluster devices, this IP address can be the virtual IP address.

Due to the inherent nature of LAG on the MCT client, this ARP request can reach an MCT device directly (over the CCEP) or through the MCT peer (over the ICL). In either case, the ARP response is sent out on the port where the client's MAC address is learned. If the MAC address is already learned on the MCT device at the time of receiving the ARP request, it would be over the CCEP under normal working conditions (local CCEP is in the up state). If the client's MAC address was not already learned when the ARP request is received, the client's ARP could be temporarily learned over the ICL (and is moved to the CCEP when the MDUP message from the peer is received) and the ARP response could be sent over the ICL. The cluster peer then switches the ARP response further towards the MCT client.

FIGURE 34 Configuration for Layer 3 unicast

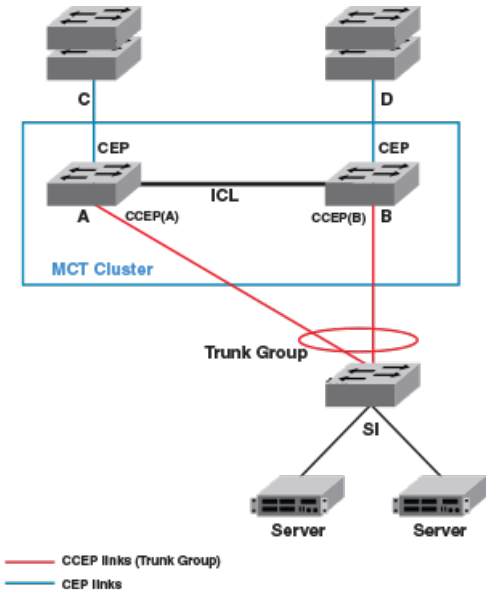

Layer 3 Traffic Forwarding Towards MCT Clients

Traffic destined to the MCT clients follows normal IP routing. By default, the best route must not involve the ICL link. Only when the local CCEP is down is traffic rerouted to pass over the ICL.

Layer 3 Traffic Forwarding From MCT Clients

For Layer 3 forwarding to work on MCT devices, a dynamic trunk must be configured on the MCT client. Routes must be statically configured or dynamically learned on the MCT cluster devices.

The client routes the traffic towards its next hop, which can be either one of the MCT devices. If ECMP is deployed on the client, each MCT device can be a possible next hop. In such a deployment, the traffic can be load balanced at a Layer 3 level over the next two hops. Because a LAG is deployed at the client, this traffic is further subjected to load balancing at the Layer 2 level over the physical ports in the LAG. Thus, the traffic being sent out with the next hop as one of the MCT devices can either reach it directly or through the cluster peer (where it gets Layer 2 switched towards the intended next hop).

Therefore, almost 50 percent of traffic being forwarded from MCT clients (and as much as 100 percent of traffic in the worst case) can pass through the ICL. This fact should be considered when designing the ICL capacity in the network.

User-defined VRF Support over MCT

Virtual routing and forwarding (VRF) allows multiple instances of a routing table to coexist within a router. A router can have multiple VRF instances configured. The routing table, Forwarding Information Base (FIB), and so on are maintained separately for each VRF instance. A service provider can cater to multiple clients by keeping the routing information separate for each client and different clients can use similar or overlapping IP addresses without the fear of information being sent to devices other than their own. For more information on VRF and related configurations, refer to the *Ruckus FastIron Layer 3 Routing Configuration Guide*.

Similar to the individual functionality of VRF, VRF over MCT allows the peer cluster devices to maintain separate routing and forwarding tables for each VRF instance, thus allowing overlapping of IP addresses, route isolation, and so on. In releases prior to FastIron 08.0.70, VEs spanning the MCT

member VLAN ports supported only the default VRF. The MCT enhancement in FastIron 08.0.70 allows the MCT member ports to be added under user-defined VRF instances.

NOTE
User VRF support is for MCT member VLANs or VEs only. Session VLANs and keep-alive VLANs will remain in the default VRF.

VRF over MCT facilitates the support of Layer 3 routing protocol instances running under user VRF instances to be enabled on the MCT member ports. Thus, the supported routing protocols can maintain adjacency over each user VRF instance between the peer cluster devices, and clients and uplink devices. VRF over MCT also allows the MCT cluster peer IP address to be configured as the next hop or neighbor in different IGP protocols and helps to advertise or propagate the cluster (session VE) IP addresses.

VRRP or VRRP-E over an MCT-enabled network

To interface a Layer 2 MCT deployment with a Layer 3 network and add redundancy at the Layer 3 level, MCT can be configured with the Virtual Router Redundancy Protocol (VRRP). The standard VRRP mode is master-backup, and all traffic is forwarded through the master. In VRRP-E server virtualization, multiple VRRP standby devices are supported, and each device can be configured to route to an upstream Layer 3 network. This provides efficient deployment for both Layer 2 and Layer 3 networks.

The MCT device acting as a backup router will forward all packets destined to VRRP or VRRP-E virtual MAC address to the VRRP or VRRP-E master router for routing. The VRRP or VRRP-E backup learns the virtual MAC address while processing the VRRP hello message from the VRRP master. Both data traffic and VRRP or VRRP-E control traffic travel through the ICL unless the short-path forwarding feature is enabled (VRRP-E only).

VRRP or VRRP-E and VRRP-E2 short-path forwarding (SPF) should be enabled, if required. If VRRP is deployed or VRRP-E is deployed without the short-path forwarding feature on the VRRP-E backup, it is likely that almost 50 percent of CCEP to CEP traffic (and as much as 100 percent of traffic in the worst case) can pass through the ICL from the backup to the master device. This fact should be considered when designing ICL capacity in the network.

When one MCT device acts as a VRRP or VRRP-E master and the peer device is the VRRP or VRRP-E backup, the following behavior is observed:

- Frames sent to the VRRP or VRRP-E virtual MAC address are forwarded to the VRRP or VRRP-E master device for routing. The VRRP-E MAC address is learned by the other MCT device that acts as a backup router.
- Both data traffic and VRRP-E control traffic received by the VRRP backup from an MCT client must travel through the ICL, unless the short-path forwarding feature is enabled.

When both MCT devices act as the VRRP or VRRP-E backup, the following traffic behavior is observed:

- Frames sent to the VRRP or VRRP-E virtual MAC address are forwarded to the VRRP or VRRP-E master router for routing.
- The VRRP-E MAC address is learned by both MCT devices acting as backup routers.
- Both data traffic and VRRP-E control traffic travel through the links connecting them to the VRRP or VRRP-E master.

OSPF and BGP over an MCT-enabled network

OSPF and BGP adjacencies can be established over the MCT member VLANs between any combinations of network elements in the MCT topology.

The following combinations can be established:

- Devices connected to the MCT cluster over CEP ports
- Devices connected to the MCT cluster over non-MCT ports
- MCT cluster devices
- MCT clients
- Devices behind MCT clients

In such a deployment, the MCT clients and the devices behind them form separate protocol adjacencies with each MCT cluster device. These multiple Layer 3 next hops can be utilized by deploying ECMP on the MCT client device.

NOTE
The MCT failover will not be a hitless one for Layer 3 traffic because each MCT cluster device forms an independent adjacency. When one of the MCT devices goes down, a Layer 3 reconvergence is required and traffic loss is expected during this time.

FIGURE 35 OSPF and BGP configuration in an MCT-enabled network

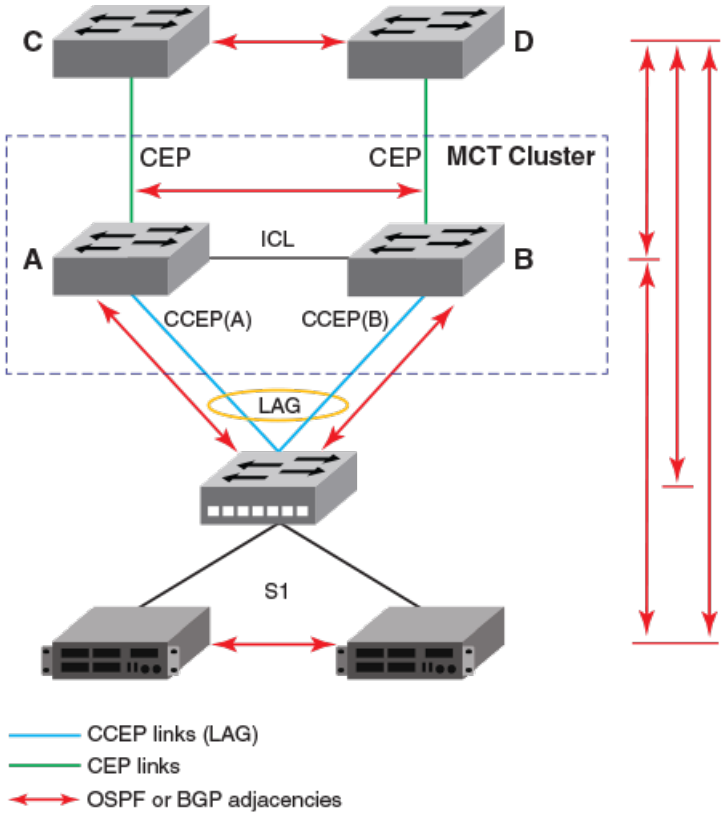

Layer 3 with MCT configuration considerations

The following configurations apply to Layer 3 behavior with MCT:

- Not all Layer 3 features on MCT management interface are supported. If a VLAN is already configured with these Layer 3 features, it cannot be made the session VLAN. To see the list of unsupported features on the MCT management interface, refer to Layer 3 Behavior with MCT on page 110.
- IPv6 configurations are not supported on VEs of session or member VLANs.
- Route-only ports cannot be used as CCEPs or ICL ports.
- Global route-only configuration and MCT cluster configuration are mutually exclusive.
- Using MCT management interface IPs for a tunnel source is not supported.
- Configuring static and policy-based routes using the MCT management interface is not supported.
- Configurations to redistribute connected routes will not advertise IP addresses on an MCT management interface.
- IP addresses on the MCT management interface must not be used for BGP peers on neighboring devices.

- IP addresses on the MCT management interface must not be used for static configurations on neighboring devices.
- For MCT devices configured with VRRP or VRRP-E, track-port features can be enabled to track the link status to the core devices on the VRRP master, so the VRRP or VRRP-E failover can be triggered on the VRRP backup, so as to disable short-path forwarding when it loses its relevance.
- VRRP or VRRP-E must not be used along with OSPF or BGP on the same MCT member VE.

  NOTE
  To prevent unintended traffic forwarding by the CPU, RUCKUS recommends disabling ICMP redirect globally when VRRP or VRRP-E is configured.

MCT configuration for a single-level MCT deployment

The following figure shows a sample configuration for a single-level MCT deployment. The associated configuration follows.

FIGURE 36 Sample Configuration for a Single-Level MCT Deployment

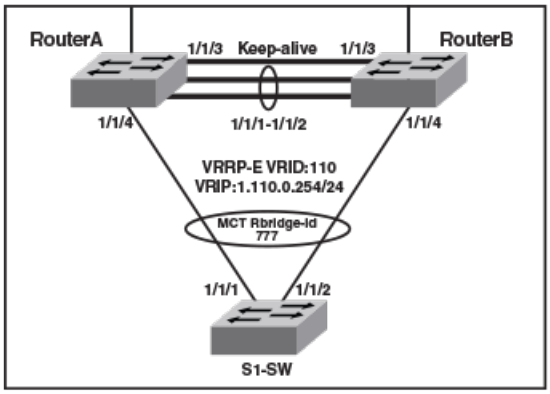

MCT Configuration: RouterA

This example presents the MCT configuration for the RouterA cluster device.

```
!
lag lag_routera static id 55
 ports ethernet 1/1/1 to 1/1/2

!
 port-name "ICL-To_routerB_eth1/1/1" ethernet 1/1/1
 port-name "ICL-To_routerB_eth1/1/2" ethernet 1/1/2
!
!
vlan 110 name Member-vlan by port
 tagged ethe 1/1/4 lag 55
 router-interface ve 110
!
vlan 1000 name ICL-Session-vlan by port
 tagged lag 55
 router-interface ve 1000
!
vlan 1001 name MCT-Keep-Alive by port
 tagged ethe 1/1/3
!
interface ve 1000
 ip address 10.0.0.254 255.255.255.252
!
```

```
cluster FI-MCT 1750
 rbridge-id 801
 session-vlan 1000
 keep-alive-vlan 1001
 icl FI_SWR-MCT lag 55
 peer 10.0.0.253 rbridge-id 800 icl FI_SWR-MCT
 deploy
 client S1-SW
  rbridge-id 777
  client-interface ethe 1/1/4
  deploy
!
interface ve 110
 port-name S1-SW
 ip address 10.110.0.253 255.255.255.0
!
```

MCT Configuration: RouterB

This example presents the MCT configuration for the RouterB cluster device.

```
lag lag_routerb static id 55
ports ethernet 1/1/1 to 1/1/2

!
vlan 110 name Member-vlan by port
 tagged ethe 1/1/4 lag 55
 router-interface ve 110
!
vlan 1000 name ICL-Session-vlan by port
 tagged lag 55
 router-interface ve 1000
!
vlan 1001 name MCT-Keep-Alive by port
 tagged ethernet 1/1/3
!
interface ve 1000
 ip address 10.0.0.253 255.255.255.252
!
cluster FI-MCT 1750
 rbridge-id 800
 session-vlan 1000
 keep-alive-vlan 1001
 icl FI_SWR-MCT lag 55
 peer 10.0.0.254 rbridge-id 801 icl FI_SWR-MCT
 deploy
 client S1-SW
  rbridge-id 777
  client-interface ethernet 1/1/4
  deploy
!
interface ve 110
 port-name S1-SW
 ip address 10.110.0.252 255.255.255.0
!
```

MCT Configuration: S1-SW Device

This example presents the configuration for the MCT deployment on the S1-SW device.

```
!
lag lag_s1_sw static id 60
 ports ethe 1/1/1 to 1/1/2
!
vlan 110 by port
tagged lag 60
 router-interface ve 110
!
```

```
interface ve 110
 ip address 10.110.0.1 255.255.255.0
!
```

MCT Configuration with VRRP-E

The following figure shows a sample MCT configuration with VRRP-E. The associated configuration follows. The configuration for VRRP is similar.

FIGURE 37 Sample MCT Configuration with VRRP-E

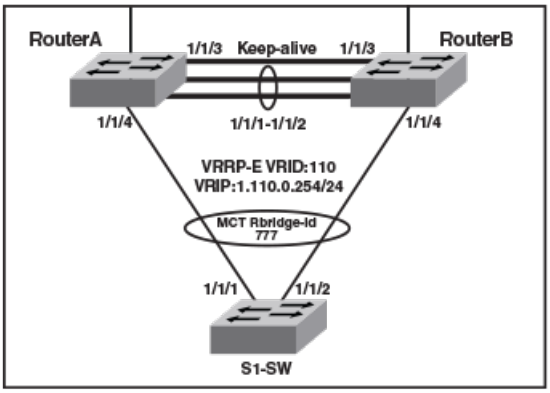

VRRP-E Configuration: RouterA

This example presents the VRRP-E configuration for the RouterA cluster device.

```
!
router vrrp-extended
!
interface ve 110
 port-name S1-SW
 ip address 10.110.0.253 255.255.255.0
 ip vrrp-extended vrid 110
  backup
  ip-address 10.110.0.254
  short-path-forwarding
  enable
!
```

VRRP-E Configuration: RouterB

This example presents the VRRP-E configuration for the RouterB cluster device.

```
!
router vrrp-extended
!
interface ve 110
 port-name S1-SW
 ip address 10.110.0.252 255.255.255.0
 ip vrrp-extended vrid 110
  backup
  ip-address 10.110.0.254
  short-path-forwarding
  enable
!
```

MCT Configuration with OSPF

The following examples describe sample MCT configurations with OSPF.

FIGURE 38 MCT Configuration with OSPF

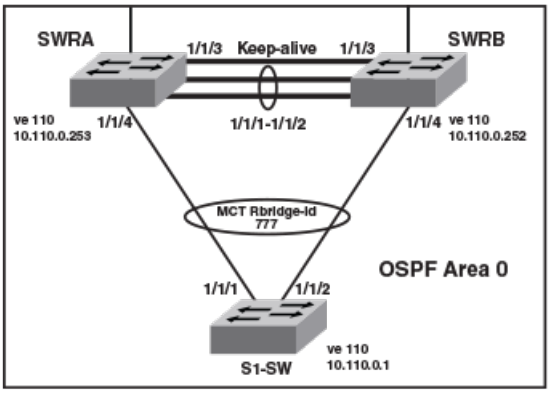

OSPF Configuration: SWRA

This example presents the OSPF configuration for the SWRA cluster device.

```
!
router ospf
area 0
!
interface ve 110
ip address 10.110.0.253 255.255.255.0
ip ospf area 0
!
```

OSPF Configuration: SWRB

This example presents the OSPF configuration for the SWRB cluster device.

```
!
router ospf
area 0
!
interface ve 110
ip address 10.110.0.252 255.255.255.0
ip ospf area 0
!
```

OSPF Configuration: S1-SW

This example presents the configuration for the S1-SW device.

```
!
lag lag_s1_sw static id 60
ports ethernet 1/1/1 to 1/1/2

!
vlan 110 by port
tagged lag 60
router-interface ve 110
!
router ospf
```

```
area 0
!
interface ve 110
ip address 10.110.0.1 255.255.255.0
ip ospf area 0
!
```

MCT Configuration with BGP

The following examples describe sample MCT configurations with BGP.

FIGURE 39 MCT Configuration with BGP

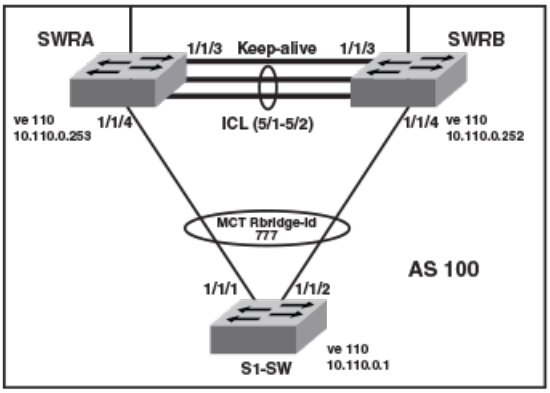

BGP Configuration: SWRA

This example presents the BGP configuration for the SWRA cluster device.

```
!
interface ve 110
ip address 10.110.0.253 255.255.255.0
!
router bgp
local-as 100
neighbor 10.110.0.252 remote-as 100
neighbor 10.110.0.1 remote-as 100
!
```

BGP Configuration: SWRB

This example presents the BGP configuration for the SWRB cluster device.

```
!
interface ve 110
ip address 10.110.0.252 255.255.255.0
!
router bgp
local-as 100
neighbor 10.110.0.253 remote-as 100
neighbor 10.110.0.1 remote-as 100
!
```

BGP Configuration: S1-SW

This example presents the BGP configuration for the S1-SW device.

```
!
lag lag_s1_sw static id 60
ports ethernet 1/1/1 to 1/1/2

!
vlan 110 by port
tagged ethernet lag 60
router-interface ve 110
!
interface ve 110
ip address 10.110.0.1 255.255.255.0
!
router bgp
local-as 100
neighbor 10.110.0.253 remote-as 100
neighbor 10.110.0.252 remote-as 100
!
```

PIM Over MCT Intermediate Router Functionality

MCT peers support intermediate router functionality by accepting PIM neighbors on specific interfaces, thus routing multicast traffic as fully functional PIM devices acting as upstream and downstream routers.

MCT peers support Protocol Independent Multicast routing (PIM) on Cluster Client Edge Port (CCEP) and Inter-Chassis Link (ICL) interfaces.

PIM states between MCT peers are synchronized by sending the control packets natively over the ICL. The nature of the MCT LAG requires this. Packets from the MCT client on the CCEPs are received by only one of the MCT peers. Therefore the control packets that are received natively on the CCEPs are sent over the ICL to synchronize the states. The Join, Prune, and Assert packets are synchronized to maintain the Outgoing Interface (OIF) state for the CCEPs on both peers. For CCEP OIFs created by PIM joins, only one of the MCT peers forwards the traffic and the other peer drops the traffic.

These are the general rules followed for the control packet handling algorithm:

- Control packets originated from MCT peers will be flooded on the MCT VLAN. Exceptions are assert packets and join packets triggered only for ICL OIFs.
- Control packets received on any port of the MCT VLAN are flooded on the MCT VLAN.
- Control packets received on the ICL are flooded in a controlled manner on the MCT VLAN based on remote CCEP status, that is, based on whether they are up or down.

Control and data packets received on an ICL port are processed by searching the source MAC address of the packet in the MAC table to determine the packet ingress port as follows:

- If the source MAC address is learned on a CCEP, the packet ingress port will be a CCEP.
- If the source MAC address is not learned on a CCEP, the packet ingress port will be an ICL port.

In the following figures, P1 and P2 are MCT peers and R1 is the MCT client. P1, P2, and R1 are configured with PIM on the MCT VE interface. MCT peers act as PIM intermediate routers with respect to R1.

MCT Peer as Intermediate Upstream Router

P1 and P2 are the MCT peers and are acting as upstream routers for R1. R1 is the last-hop router (LHR).

P1, P2, and R1 are configured with PIM on the MCT virtual Ethernet (VE) interface. Rendezvous Point (RP) and source are in the core and the connectivity to the core is by way of an uplink.

FIGURE 40 MCT Peer as Intermediate Upstream Router

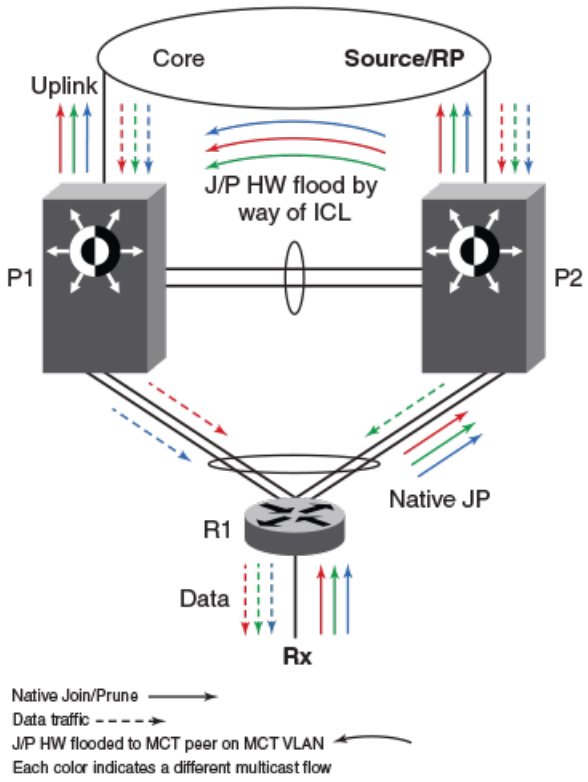

Hello exchange and neighbor state

- In MCT topology, the CCEP links going out of P1 and P2 to R1 are treated as a single LAG at R1. When R1 sends multicast packets (either control or data packets), they reach only one of the peers. These control packets (hellos, joins, prunes, and others) received by one peer are flooded on the MCT VLAN including the ICL port to the other peer.
- Hellos sent by R1 can reach either P1 or P2 due to nature of the MCT LAG.
- Hellos that reach P2 are sent to P1 natively over ICL. P1 learns about R1 (by searching the source-MAC address of the hello packet in its MAC table) and it treats the hello as if it was received on its CCEP interface. Thus, both P1 and P2 learn about the PIM neighbors across the CCEP links and create a neighbor state for R1.
- Hellos originating from P1 and P2 are flooded on the MCT VLAN (for example on the ICL, CEP, and local CCEPs). This enables R1 to learn that both the MCT peers are PIM neighbors and also enables P1 and P2 to learn about each other as PIM neighbors on an ICL link and create a neighbor state for each other.

Join or prune exchange and mcache state

- Because receivers are connected to R1, R1 creates the *,G state and sends a join state towards the RP and sends it on the MCT LAG. This join, like any other packet, is received by only one of the MCT peers.
- If P2 receives the *,G join natively, the join is processed or consumed and flooded to P1 over the ICL.
- P1 processes the join received over the ICL as if it is received on the CCEP.
- Both P1 and P2 create the *,G state with the CCEP as the OIF.
- Both the peers send the *,G join towards the RP and both the peers pull the traffic.

- When the traffic arrives, the S,G state is created on both the peers but only one of them forwards the traffic based on the software hashing algorithm.

MCT Peer as Intermediate Downstream Router

P1 and P2 are the MCT peers and are acting as downstream routers for R1. R1 is the intermediate router.

P1, P2, and R1 are configured with PIM on the MCT VE interface. The RP and source are beyond R1.

FIGURE 41 MCT Peer as Intermediate Downstream Router

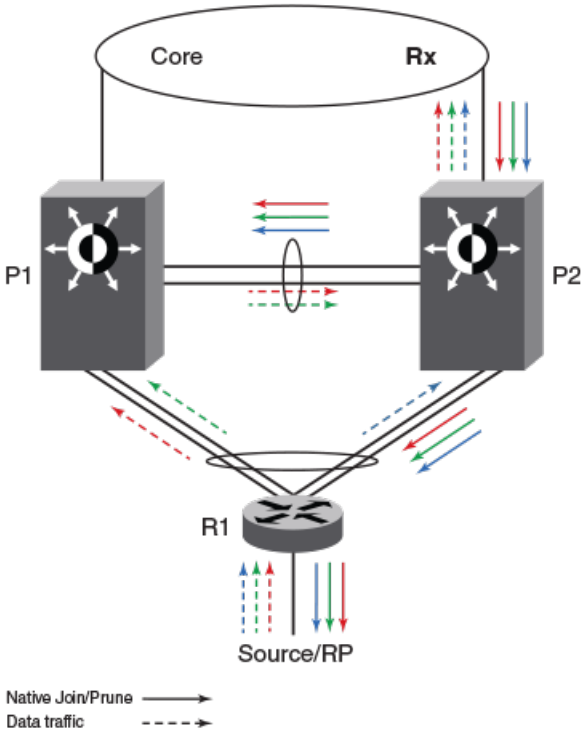

Hello exchange and neighbor state

The RP acts and works as the upstream router.

Join or prune exchange and mcache state

- The *,G joins come from the core to P2.
- P2 creates the *,G state with the uplink as the OIF by consuming the join state.
- Due to its *,G state, P2 originates a join towards the RP. This join is flooded on the MCT VLAN and R1 creates the *,G state.
- Upon receiving the join natively by way o ICL, P1 creates the *,G state and adds ICL as the OIF. As a special case, P1 will not include the *,G in the join it generates towards the RP because in this case the IIF is the CCEP and ICL is the only OIF and the remote CCEP is up. This is to avoid P1 pulling traffic from P2 unnecessarily on the ICL link because of P1 sending joins flooded on the VLAN and in turn P2 adds ICL as an OIF.
- R1 sends the join toward the RP and pulls the traffic. Because the OIF at R1 is a LAG, traffic pulled by R1 will be load-shared among the member links.

- Therefore traffic for S,G will reach only one of the MCT peers. Assuming the traffic reaches P2, the S,G state will be created on P2 and P2 will be forwarding the traffic.
- Assuming the traffic reaches P1, the traffic will be forwarded by way of the ICL to P2 and P2 will forward it to its OIF which is the link connecting to the core.

Load Sharing of Multicast Traffic by MCT-Cluster on CCEP Links

MCT peers load-share multicast traffic on both the local and the remote CCEP links when both are available.

Loads are only shared, and may or may not be balanced, across the CCEP links. An MCT peer selects a stream for forwarding based on a software hash function that uses the source and group addresses. You can have one MCT peer forwarding more multicast streams than another.

The load is assigned without regard to the capacity of the CCEP links, so MCT works best when both CCEP links have the same capacity and the source and group addresses are evenly distributed. This situation avoids the timing synchronization between the MCT peer routers, which would be very hard to achieve.

The sharing is done at the stream level (not the packet level) using the following software hash algorithm:

((source address + group address) & 0x00000001) ^ ((local_bridge_id > remote_bridge_id))

If the result is 1, the local CCEP forwards the traffic; if the result is 0, the remote CCEP forwards the traffic.

Fast Convergence of Multicast Traffic

Multicast routing on MCT provides sub-second convergence of traffic in the event of CCEP or MCT peer failures and recoveries.

When a CCEP or MCT peer fails, multicast traffic that used to go through the failed CCEP link or node switches to the surviving CCEP link in approximately one second or less.

Sub-second convergence requires both MCT peers to maintain the state for traffic and pull down traffic for all multicast flows from the core, regardless of whether the chassis is forwarding this stream out of the local CCEP. This means that streams forwarded by the remote CCEP are pulled down to the local MCT peer but dropped in the absence of other receivers on the local router, thus potentially wasting the bandwidth inside the core on uplink. This is deemed a fair trade-off because otherwise the MCT peer that takes over the job of forwarding a stream when the remote CCEP or peer fails must establish a new multicast path through the core, which can potentially black out the stream for many seconds.

Requirements for Multicast MCT

OSPF must be supported on MCT member VLAN virtual Ethernet (VE) interfaces; that is, on CCEP, CEP, and ICL links.

Limitations

The following limitations apply for MCT peers to support intermediate router functionality. The limitations are due to load-sharing and fast convergence trade-offs.

- PIM-DM is not supported.
- A few packets may be lost during the convergence interval or forwarding duplication may occur.
- An MCT client will do flow-based load-sharing, not per-packet load-sharing.
- Traffic loss or duplication will occur when the keep-alive VLAN, CCP, or the ICL between MCT peers is not up.
- Multicast routing configurations on a session VLAN is not supported and restricted in configuration.
- The load will only be shared, and may or may not be balanced across the CCEPs.
- During the convergence interval, a few packets may be lost. In the case of recoveries, some packets may end up being forwarded by both cluster routers during the interval.

- Both the MCT peers maintain the state for traffic and pull down traffic for all multicast flows from the core, whether or not the chassis is forwarding this stream to the local CCEP. This could potentially waste the bandwidth inside the core and on the uplink.
- You can configure both MCT peers to do either PIM routing or multicast snooping in MCT VLANs. However, configuring one MCT peer to do PIM routing and the other to do multicast snooping in the same MCT VLAN is not supported.
- A PIM neighbor on the CEP in an MCT VLAN is not supported if the MCT cluster is running PIM on the same MCT VLAN.
- First-hop routing (FHR) and "last-hop routing (LHR) are not supported on MCT clusters on MCT VLAN interfaces.
- Rendezvous points (RPs) are not supported on MCT clusters.
- MSDP and Anycast-RP are not supported on MCT clusters.
- PIM over MCT peers is not supported on non default VRFs.
- IPv6 multicast routing on MCT is not supported on MCT clusters.

Configuring Multicast Routing over MCT

Complete the following these steps to configure multicast routing over MCT.

1. Configure an MCT cluster.
2. Configure an MCT member VLAN.
3. Configure multicast routing (PIM) over MCT member VE.

The following example shows the configuration of an MCT cluster, MCT member VLAN with router interface (VE), and PIM configuration over MCT member VE on MCT Peer 1.

```
cluster cs 10
 rbridge-id 1000
 session-vlan 4
 keep-alive-vlan 5
 icl MCT ethernet 1/1/1
 peer 5.5.5.100 rbridge-id 4000 icl MCT
 deploy
 client client-100
  rbridge-id 100
  client-interface ethernet 1/1/11
  deploy
!
!
!
!
!
!
end


vlan 10 name member-vlan by port
 tagged ethe 1/1/1 ethe 1/1/11 ethe 1/1/25
 router-interface ve 10
 spanning-tree 802-1w
 spanning-tree 802-1w ethe 1/1/11 disable
!
!

interface ve 10
 ip address 10.10.10.100 255.255.255.0
 ip pim-sparse
 ip ospf area 0
```

The following example shows the configuration of an MCT cluster, MCT member VLAN with router interface (VE), and PIM configuration over MCT member VE on MCT Peer 2.

```
cluster cs 10
 rbridge-id 4000
 session-vlan 4
 keep-alive-vlan 5
 icl MCT ethernet 2/1/1
 peer 5.5.5.10 rbridge-id 1000 icl MCT
 deploy
 client client-100
  rbridge-id 100
  client-interface ethernet 2/1/11
  deploy
!
!
!
!
!
!
end


vlan 10 name member-vlan by port
tagged ethe 2/1/1 ethe 2/1/11 ethe 2/1/27
router-interface ve 10
spanning-tree 802-1w
spanning-tree 802-1w ethe 2/1/11 disable
!


interface ve 10
ip address 10.10.10.1 255.255.255.0
ip pim-sparse
ip ospf area 0
```

Displaying MCT information

You can display the following information about MCT configuration and operation:

- Peer and client states
- State machine information
- Cluster, peer, and client states
- MCT-related information for Ethernet interfaces
- STP information

Displaying peer and client states

Use the **show cluster config** command to display the peer device and client states.

```
device# show cluster SXR122 config

cluster SXR122 100
rbridge-id 100
session-vlan 1
keep-alive-vlan 3
icl SXR122-MCT ethernet 1/1/1
peer 172.17.0.2 rbridge-id 101 icl SXR122-MCT
deploy
client KL134
rbridge-id 14
client-interface ethernet 1/1/23
```

```
deploy
client AGG131
rbridge-id 10
client-interface ethernet 1/2/2
deploy
client FOX135
rbridge-id 15
client-interface ethernet 1/2/5
deploy
```

Displaying state machine information

Use the **show cluster client** command to display additional state machine information, including the reason a local CCEP has gone down. You can specify an individual cluster and client as an option.

```
device# show cluster 1 client

Cluster 1 1
===================
Rbridge Id: 101, Session Vlan: 3999, Keep-Alive Vlan: 4001
Cluster State: Deploy
Client Isolation Mode: Loose
Configured Member Vlan Range: 100 to 105
Active Member Vlan Range: 100 to 105
MCT Peer's Reachability status using Keep-Alive Vlan: Peer Reachable
 Client Info:
 ------------
 Client: c1, rbridge-id: 300, Deployed
 Client Port: 1/3/11
 State: Up
 Number of times Local CCEP down: 0
 Number of times Remote CCEP down: 0
 Number of times Remote Client undeployed: 0
 Total CCRR packets sent: 4
 Total CCRR packets received: 3
```

The following table shows the messages that may be displayed to explain why the local CCEP is down.

TABLE 16 Reasons for Local CCEP down

Message for Local CCEP down	Meaning
client-interfaces shutdown	Command is configured.
client-isolation strict	Command is configured.
Deploy mismatch	Client is not deployed remotely.
Slave state	Client is in slave state when CCP is down.
cluster and client undeployed	Neither the cluster nor client is deployed.
cluster undeployed	Cluster is not deployed.
client undeployed	Client is not deployed.

Displaying cluster, peer, and client states

Use the **show cluster ccp peer** command to display cluster, peer device, and client states. As an option, you can specify an individual cluster and request additional details.

```
device# show cluster 1 ccp peer

...
PEER IP ADDRESS          STATE           UP TIME
---------------                        -------------    --------------
 10.1.1.1                   OPERATIONAL       0 days: 2 hr:25 min:16 sec
```

```
device (config-cluster-SX_1)# show cluster 1 ccp peer detail
**************Peer Session Details*********************
IP address of the peer                          10.1.1.1
Rbridge ID of the peer                          100
Session state of the peer                       OPERATIONAL
Next message ID to be send                      287
Keep Alive interval in seconds                  30
Hold Time Out in seconds                        90
Fast Failover is enable for the session
UP Time                                          0 days: 2 hr:22 min:58 sec
Number of  tcp packet allocations failed           0
Message    Init          Keepalive     Notify        Application   Badmessages
Send       3             2421          2             53            0
Receive    3             2415          0             37            0
TCP connection is up
TCP connection is initiated by                  10.1.1.2
TCP connection tcbHandle not pending
TCP connection  packets not received
**************TCP Connection Details*********************
    TCP Connection state: ESTABLISHED      Maximum segment size: 1436
       Local host:  10.1.1.2, Local  Port: 12203
       Remote host: 10.1.1.1, Remote Port: 4175
       ISentSeq: 1867652277  SendNext: 1867660731  TotUnAck:          0
       TotSent:        8454  ReTrans:           9  UnAckSeq: 1867660731
       IRcvSeq:  3439073167  RcvNext:  3439078415  SendWnd:       16384
       TotalRcv:       5248  DupliRcv:         16  RcvWnd:        16384
       SendQue:           0  RcvQue:            0  CngstWnd:       1452
```

Displaying information about Ethernet interfaces

Use the **show interface ethernet** command to display information about Ethernet interfaces. The MCT-related information is shown in bold in the following example.

```
device# show interface ethernet 1/7/1

...
GigabitEthernet1/7/1 is disabled, line protocol is down
  Hardware is GigabitEthernet, address is 0024.3822.8260 (bia 0024.3822.8260)
  Configured speed auto, actual unknown, configured duplex fdx, actual unknown
  Configured mdi mode AUTO, actual unknown
  Member of L2 VLAN ID 1, port is untagged, port state is DISABLED
  BPDU guard is Disabled, ROOT protect is Disabled
  Link Error Dampening is Disabled
  STP configured to ON, priority is level0
  Flow Control is config enabled, oper disabled, negotiation disabled
  Mirror disabled, Monitor disabled
  Not member of any active trunks
  Not member of any configured trunks
  No port name
  IPG MII 96 bits-time, IPG GMII 96 bits-time
  MTU 1500 bytes, encapsulation Ethernet
  ICL port for icl1 in cluster id 1
  300 second input rate: 0 bits/sec, 0 packets/sec, 0.00% utilization
  300 second output rate: 0 bits/sec, 0 packets/sec, 0.00% utilization
  0 packets input, 0 bytes, 0 no buffer
  Received 0 broadcasts, 0 multicasts, 0 unicasts
  0 input errors, 0 CRC, 0 frame, 0 ignored
  0 runts, 0 giants
  0 packets output, 0 bytes, 0 underruns
  Transmitted 0 broadcasts, 0 multicasts, 0 unicasts
  0 output errors, 0 collisions
  Relay Agent Information option: Disabled
show interface ethernet 1/7/3
GigabitEthernet1/7/3 is disabled, line protocol is down
  Hardware is GigabitEthernet, address is 0024.3822.8262 (bia 0024.3822.8262)
  Configured speed auto, actual unknown, configured duplex fdx, actual unknown
  Configured mdi mode AUTO, actual unknown
  Member of L2 VLAN ID 1, port is untagged, port state is DISABLED
  BPDU guard is Disabled, ROOT protect is Disabled
```

```
Link Error Dampening is Disabled
STP configured to ON, priority is level0
Flow Control is config enabled, oper disabled, negotiation disabled
Mirror disabled, Monitor disabled
Not member of any active trunks
Not member of any configured trunks
No port name
IPG MII 96 bits-time, IPG GMII 96 bits-time
MTU 1500 bytes, encapsulation Ethernet
CCEP for client c149_150 in cluster id 1
300 second input rate: 0 bits/sec, 0 packets/sec, 0.00% utilization
300 second output rate: 0 bits/sec, 0 packets/sec, 0.00% utilization
0 packets input, 0 bytes, 0 no buffer
Received 0 broadcasts, 0 multicasts, 0 unicasts
0 input errors, 0 CRC, 0 frame, 0 ignored
0 runts, 0 giants
0 packets output, 0 bytes, 0 underruns
Transmitted 0 broadcasts, 0 multicasts, 0 unicasts
0 output errors, 0 collisions
Relay Agent Information option: Disabled
```

Displaying STP information

Use the **show span** command to display STP information for an entire device.

```
device# show span

...
STP instance owned by VLAN 90

Global STP (IEEE 802.1D) Parameters:

VLAN Root             Root Root   Prio Max He- Ho- Fwd Last    Chg Bridge
 ID   ID              Cost Port   rity Age llo ld  dly Chang   cnt Address
                               Hex  sec sec sec sec sec
  90 8000748ef8f9739d 0    Root   8000 20  2   1   15  259968  1   748ef8f9739d

Port STP Parameters:

Port   Prio Path  State       Fwd    Design  Designated       Designated
Num    rity Cost              Trans  Cost    Root             Bridge
       Hex
1/2/1  80   1     FORWARDING  1      0       8000748ef8f9739d 8000748ef8f9739d
1/3/5  80   0     DISABLED    0      0       0000000000000000 0000000000000000
1/3/6  80   0     DISABLED    0      0       0000000000000000 0000000000000000
```

MAC show and clear Commands

Cluster-specific **show** and **clear** commands can be use to view and clear information about MAC addresses.

MAC show commands

To display all local MAC address entries for a cluster, use the **show mac-address cluster** command.

```
device# show mac-address cluster 1000

Total Cluster Enabled(CL+CR+CCL+CCR) MACs: 1
Total Cluster Local(CL) MACs: 1
CCL: Cluster Client Local CCR:Cluster Client Remote CL:Local CR:Remote
Total active entries from all ports = 1
Total static entries from all ports = 3
MAC-Address     Port           Type          MCT-Type VLAN
0000.0022.3333  1/2/1            Static      CML       20
0000.0022.3333  1/2/3            Static      CML       20
0000.0022.3333  1/2/13           Static      CML       20
```

MAC clear commands

To clear all MAC addresses in the system, enter the **clear mac** command.

```
device# clear mac
```

NOTE
Depending on authentication protocols configuration and high traffic, the **clear mac** command log may create a lot of new address messages, which results in high CPU utilization for a few minutes.

To clear cluster-specific MAC addresses in the system, enter the **clear mac cluster** command.

```
device# clear mac cluster AGG-1 local
```

To clear client-specific MAC addresses in the system, enter the **clear mac cluster** command with **client** and **local** options.

```
device# clear mac cluster AGG-1 client 1 local
```

To clear VLAN-specific MAC addresses in the system, enter the **clear mac vlan** command.

```
device# clear mac vlan 2
```

To clear MCT VLAN-specific MAC addresses in the system, enter the **clear mac cluster** command with **vlan** and **local** options.

```
device# clear mac cluster AGG-1 vlan 1 local
```

To clear cluster client VLAN-specific MAC addresses in the system, enter the **clear mac cluster** command with **vlan**, **client**, and **local** options.

```
device# clear mac cluster AGG-1 vlan 2 client 1 local
```

Displaying MDUP Packet Statistics

To display the statistics of MDUP packets, enter the **show mac mdup-stats** command.

```
device# show mac mdup-stats

MDUP Information
================
MDUP Data buffers in queue : 0
MDUP Statistics
===============
MDUP Update Messages sent: 7
Add Mac sent: 20
Del Mac sent: 0
Move Mac sent: 0
MDUP Mac Info Messages sent: 1
MDUP Flush Messages sent: 1
MDUP Synch Messages sent: 0
MDUP Update Messages received: 3
Add Mac received: 40
Del Mac received: 0
Move Mac received: 0
MDUP Mac Info Messages received: 0
MDUP Flush Messages received: 0
MDUP Synch Messages received: 0
```

Single-Level MCT Configuration Example

The following figure depicts a single-level MCT configuration. The clients can be server hosts or networking devices. The associated configuration follows.

NOTE
The LAG IDs are locally significant only and need not be matching on the two ends of a LAG.

FIGURE 42 Single-Level MCT Configuration

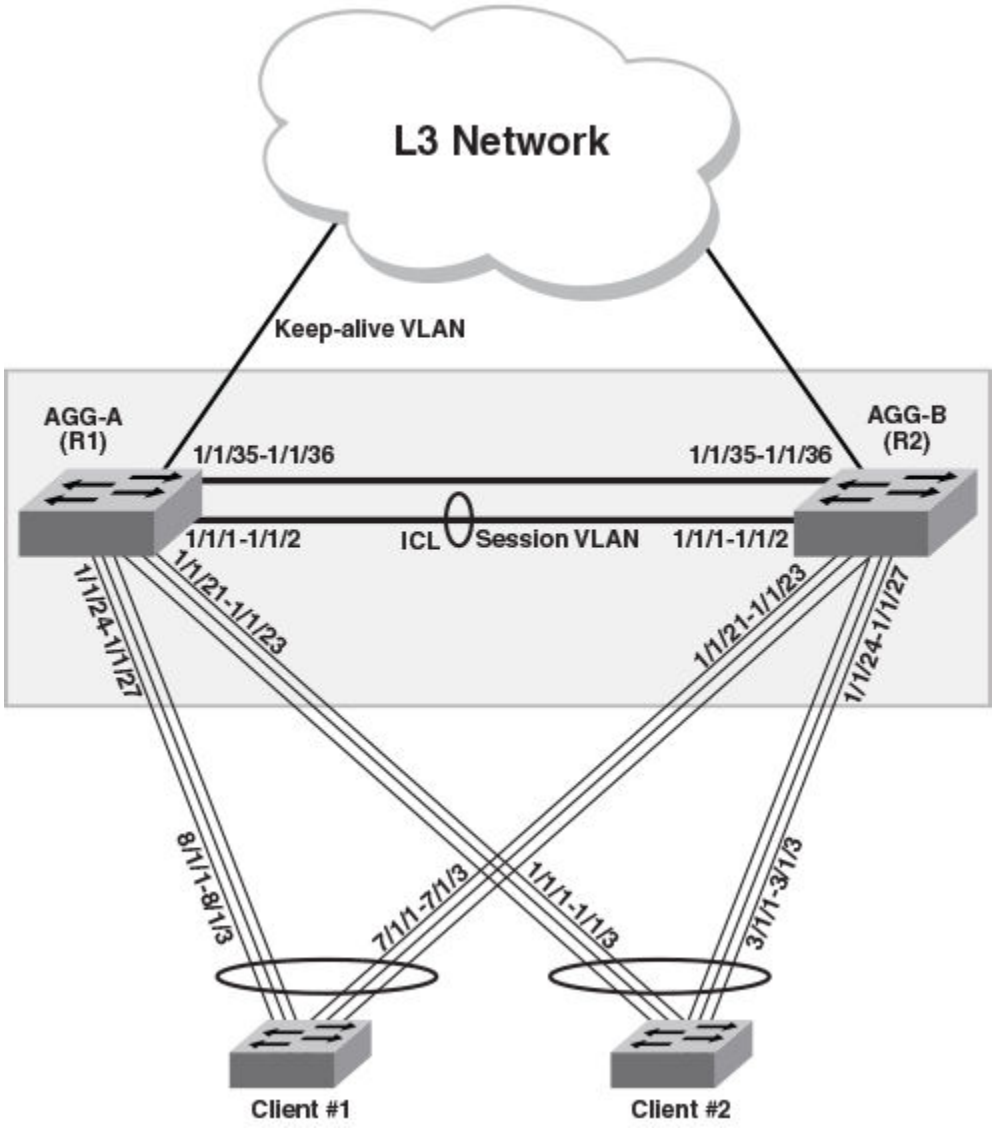

Client 1 Configuration

If client 1 is a RUCKUS ICX switch in Figure 42 on page 130, you can use the following configuration.

```
!
lag lag_client1_1 dynamic id 100
ports ethe 7/1/1 to 7/1/3 ethe 8/1/1 to 8/1/3

!
vlan 1905 by port
tagged lag 100
spanning-tree
```

```
!
```

Client 2 Configuration

If client 2 is a RUCKUS ICX switch in Figure 42 on page 130, you can use the following configuration.

```
!

lag lag_client2_1 dynamic id 200
 ports ethe 1/1/1 to 1/1/3 ethe 3/1/1 to 3/1/3

!
vlan 1905 by port
 tagged lag 200
 spanning-tree


!
```

AGG-A (R1) Configuration

The following example presents the configuration for the AGG-A (R1) cluster device in Figure 42 on page 130.

```
lag lag_agg_a_1 static id 103
 ports ethe 1/1/1 to 1/1/2

!
lag lag_agg_a_2 dynamic id 104
 ports ethe 1/1/24 to 1/1/27

!
lag lag_agg_a_3 dynamic id 105
 ports ethe 1/1/21 to 1/1/23
 primary-port 1/1/21
 deploy
!
vlan 2 name session-vlan by port
 tagged lag 103
 router-interface ve 2
!
vlan 3 name keep-alive-vlan by port
 tagged ethe 1/1/35-1/1/36
 router-interface ve 3
!
vlan 1905 by port
 tagged lag 103 to 105
!
hostname R1
!
interface ve 2
 ip address 10.1.1.1 255.255.255.0
!
interface ve 3
 ip address 10.1.2.1 255.255.255.0
!
!
cluster MCT1 1
 rbridge-id 1
 session-vlan 2
 keep-alive-vlan 3
 icl BH1 lag 103
 peer 10.1.1.2 rbridge-id 2 icl BH1
 deploy
 client client-1
  rbridge-id 1901
  client-interface lag 104
```

```
  deploy
 client client-2
  rbridge-id 1902
  client-interface lag 105
  deploy
!
```

AGG-B (R2) Configuration

e following example presents the configuration for the AGG-B (R2) cluster device in Figure 42 on page 130.

```
lag lag_agg_b_1 static id 103
 ports ethe 1/1/1 to 1/1/2

!
lag lag_agg_b_2 dynamic id 105
 ports ethe 1/1/24 to 1/1/27

!
lag lag_agg_b_3 dynamic id 104
 ports ethe 1/1/21 to 1/1/23

!
vlan 2 name session-vlan by port
 tagged lag 103
 router-interface ve 2
!
vlan 3 by port
 tagged ethe 1/1/35-1/1/36
 router-interface ve 3
!
!
vlan 1905 by port
 tagged lag 103 to 105
!
hostname R2
!
interface ve 2
 ip address 10.1.1.2 255.255.255.0
!
interface ve 3
 ip address 10.1.2.2 255.255.255.0
!
cluster MCT1 1
 rbridge-id 2
 session-vlan 2
 keep-alive-vlan 3
 icl BH1 lag 103
 peer 10.1.1.1 rbridge-id 1 icl BH1
 deploy
 client client-1
  rbridge-id 1901
  client-interface lag 104
  deploy
 client client-2
  rbridge-id 1902
  client-interface lag 105
!
```

Two-Level MCT Configuration Example

The following figure depicts a two-level MCT configuration. The clients can be server hosts or networking devices. The associated configuration follows.

NOTE
The LAG IDs are locally significant only and need not be matching on the two ends of a LAG.

FIGURE 43 Two-Level MCT Configuration

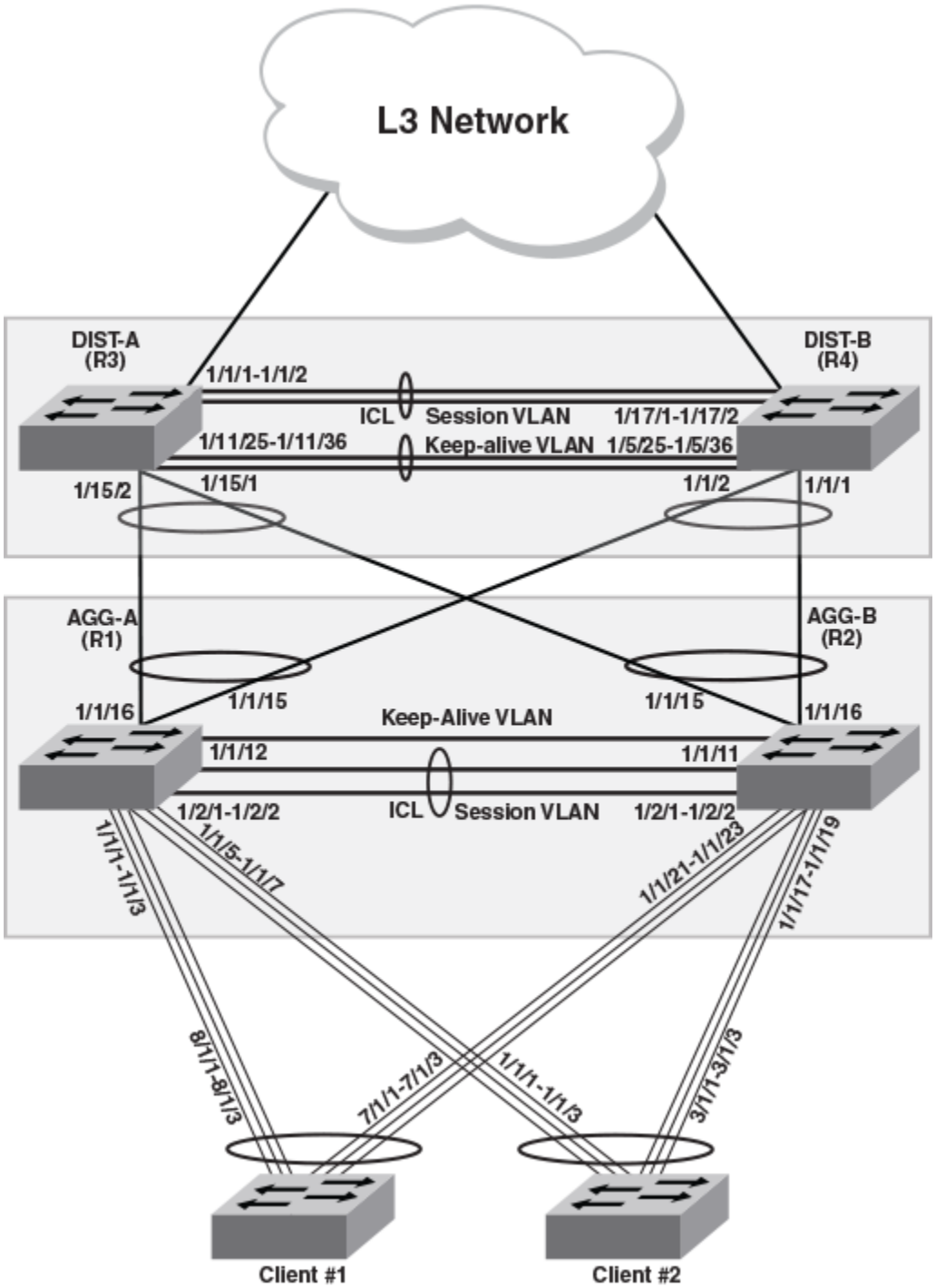

NOTE
In a two-level MCT configuration using dynamic LAGs, ensure that the upper and lower clusters have different Cluster IDs because the Cluster LACP module uses the Cluster ID as part of the LACPDU system ID.

The client configuration is the same as in the single-level example (refer to Single-Level MCT Configuration Example on page 129).

AGG-A (R1) Configuration

The following example presents the configuration for the AGG-A (R1) cluster device in Figure 43 on page 133.

```
lag lag_agg_a_1 static id 103
 ports ethe 1/2/1 to 1/2/2

!
lag lag_agg_a_2 dynamic id 104
 ports ethe 1/1/1 to 1/1/3

!
lag lag_agg_a_3 dynamic id 105
 ports ethe 1/1/5 to 1/1/7

!
lag lag_agg_a_4 dynamic id 106
 ports ethe 1/1/15 to 1/1/16

!
vlan 2 name session-vlan by port
 tagged lag 103
 router-interface ve 2
!
vlan 3 name keep-alive-vlan by port
 tagged ethe 1/1/12
 router-interface ve 3
!
!
vlan 1905 by port
 tagged lag 103 to 106
!
hostname R1
!
interface ve 2
 ip address 10.1.1.1 255.255.255.0
!
interface ve 3
 ip address 10.1.2.1 255.255.255.0
!
!
cluster MCT1 1
 rbridge-id 1
 session-vlan 2
 keep-alive-vlan 3
 icl BH1 lag 103
 peer 10.1.1.2 rbridge-id 2 icl BH1
 deploy
 client client-1
  rbridge-id 1901
  client-interface lag 104
  deploy
 client client-2
  rbridge-id 1902
  client-interface lag 105
  deploy
 client DIST_Cluster
  rbridge-id 1903
  client-interface lag 106
  deploy
!
```

AGG-B (R2) Configuration

The following example presents the configuration for the AGG-B (R2) cluster device in Figure 43 on page 133.

```
lag lag_agg_b_1 static id 106
 ports ethe 1/2/1 to 1/2/2

!
lag lag_agg_b_2 dynamic id 107
 ports ethe 1/1/17 to 1/1/19

!
lag lag_agg_b_3 dynamic id 108
 ports ethe 1/1/21 to 1/1/23

!
lag lag_agg_b_4 dynamic id 109
 ports ethe 1/1/15 to 1/1/16

!
vlan 2 name session-vlan by port
 tagged lag 106
 router-interface ve 2
!
vlan 3 name keep-alive-vlan by port
 tagged ethe 1/1/11
 router-interface ve 3
!
!
vlan 1905 by port
 tagged lag 106 to 109
!
hostname R2
!
interface ve 2
 ip address 10.1.1.2 255.255.255.0
!
interface ve 3
 ip address 10.1.2.2 255.255.255.0
!
cluster MCT1 1
 rbridge-id 2
 session-vlan 2
 keep-alive-vlan 3
 icl BH1 lag 106
 peer 10.1.1.1 rbridge-id 1 icl BH1
 deploy
 client client-1
  rbridge-id 1901
  client-interface lag 108
  deploy
 client client-2
  rbridge-id 1902
  client-interface lag 107
  deploy
 client DIST_Cluster
  rbridge-id 1903
  client-interface lag 109
  deploy
 !
```

DIST-A (R3) Configuration

The following example presents the configuration for the DIST-A (R3) cluster device in Figure 43 on page 133.

```
!
lag lag_dist_a_1 static id 15
 ports ethe 1/1/1 to 1/1/2
```

```
lag lag_dist_a_2 dynamic id 16
 ports ethe 1/15/1 to 1/15/2

!
lag keep-alive static id 200
ports ether 1/11/25 to 1/11/36

!
vlan 5 name session-vlan by port
 tagged lag 15
 router-interface ve 5
!
vlan 6 name keep-alive-vlan by port
 tagged ethe 1/11/25 to 1/11/36
 router-interface ve 6
 spanning-tree
!
vlan 1905 by port
 tagged lag 15 to 16
!
hostname R3
hitless-failover enable
!
interface ve 5
 ip address 10.2.1.1 255.255.255.0
!
interface ve 6
 ip address 10.2.2.1 255.255.255.0
!
cluster MCT2 2
 rbridge-id 3
 session-vlan 5
 keep-alive-vlan 6
 icl BH3 lag 15
 peer 10.2.1.2 rbridge-id 4 icl BH3
 deploy
 client AGG_Cluster
rbridge-id 1801
client-interface lag 16
deploy
```

DIST-B (R4) Configuration

The following example presents the configuration for the DIST-B (R4) cluster device in Figure 43 on page 133.

```
lag lag_dist_b_1 static id 40
 ports ethe 1/17/1 to 1/17/2

!
lag dist_b_2 dynamic id 41
ports ethe 1/1/1 to 1/1/2

!
lag keep-alive static id 201
ports ethe 1/5/25 to 1/5/36

!
vlan 5 name session-vlan by port
 tagged lag 40
 router-interface ve 5
!
vlan 6 name keep-alive-vlan by port
 tagged ethe 1/5/25 to 1/5/36
 router-interface ve 6
 spanning-tree
!
vlan 1905 by port
 tagged lag 40 to 41
```

```
!
hostname R4
hitless-failover enable
!
interface ve 5
 ip address 10.2.1.2 255.255.255.0
!
interface ve 6
 ip address 10.2.2.2 255.255.255.0
!
cluster MCT2 2
 rbridge-id 4
 session-vlan 5
 keep-alive-vlan 6
 icl BH3 lag 40
 peer 10.2.1.1 rbridge-id 3 icl BH3
 deploy
client AGG_Cluster
rbridge-id 1801
client-interface lag 41
deploy
```

MCT Configuration Examples Using STP

Although MCT is considered an alternative to the Spanning Tree Protocol (STP), SPT can be enabled in an MCT configuration as an added protection for any Layer 2 loops. The following use-case scenarios demonstrate the use of Spanning Tree protocols in an MCT configuration:

Configuring the Per-VLAN Spanning Tree on the MCT Clients example demonstrates the use of STP in an MCT configuration.

The following example shows STP elements enabled on MCT clients. It is recommended that you enable STP only on MCT clients, not on MCT cluster devices.

The following figure shows the base configuration of the MCT cluster, MCT clients, and the associated link-aggregation. The scenario depicted is based on this network topology.

NOTE
The LAG IDs are locally significant only and need not be matching on the two ends of a LAG.

FIGURE 44 Using STP in an MCT Configuration

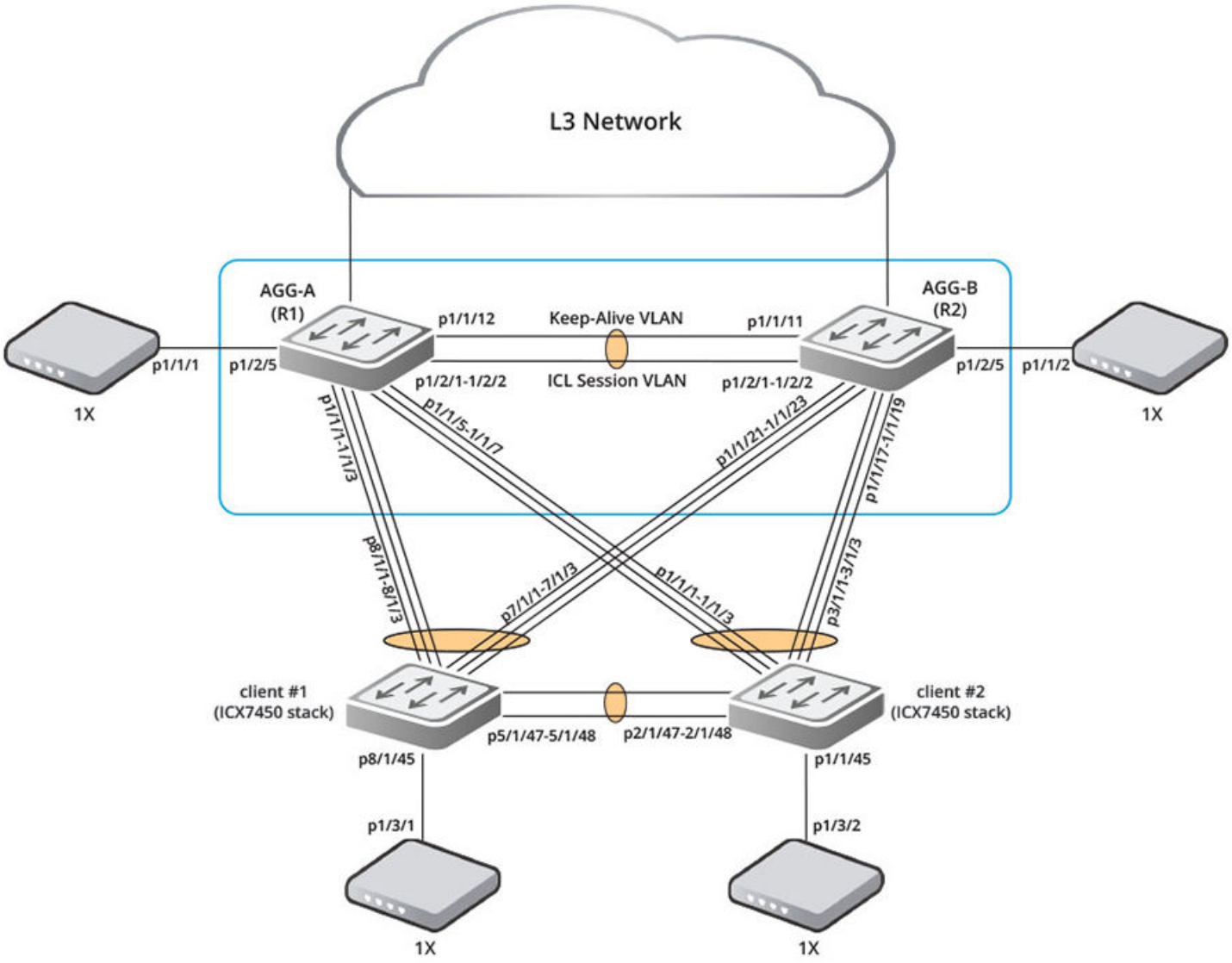

AGG-A (R1) Configuration

The following example presents the configuration for Router 1 (AGG-A) in the figure shown above.

```
!
lag "1" static id 1
 ports ethernet 1/1/1 ethernet 1/1/3


lag "2" static id 2
 ports ethernet 1/1/5 ethernet 1/1/7


lag "3" static id 3
 ports ethernet 1/2/1 ethernet 1/2/2

!
```

```
vlan 2 name session-vlan by port
tagged lag 3
router-interface ve 2
!
vlan 3 name keep-alive-vlan by port
tagged ethe 1/1/12
router-interface ve 3
!
vlan 1905 name MAC-scaling-vlan by port
tagged ethe 1/1/15 to 1/1/16 eth 1/3/1 1/3/3 lag 1 to 3 ethe 1/1/15 to
1/1/16 ethe 1/2/1 to 1/2/2 ethe 1/2/4 ethe 1/3/1 ethe 1/3/3
!
hostname R1
!
link-keepalive ethe 1/1/1 to 1/1/3 ethe 1/1/5 to 1/1/7
hitless-failover enable
!
interface ve 2
ip address 21.1.1.1 255.255.255.0
!
interface ve 3
```

AGG-B (R2) Configuration

The following example presents the configuration for Router 2 (AGG-B) in the figure shown above.

```
!
lag "1" static id 1
 ports ethernet 1/1/17 ethernet 1/1/19


lag "2" static id 2
 ports ethernet 1/1/21 ethernet 1/1/23


lag "3" static id 3
 ports ethernet 1/2/1 ethernet 1/2/3

!
vlan 2 name session-vlan by port
tagged lag 3
router-interface ve 2
!
vlan 3 by port
tagged ethe 1/1/11
router-interface ve 3
!
vlan 1905 name MAC-scaling-vlan by port
tagged ethe 1/1/15 to 1/1/19 ethe 1/1/21
```

Client 1 Configuration

The following example presents the configuration for Client #1 in the figure shown above.

```
!
lag lag1 dynamic id 1
 ports ethernet 5/1/47 to 5/1/48
!
vlan 1905 by port
 tagged ethe 7/1/1 to 7/1/3 ethe 8/1/1 to 8/1/3 ethe 8/1/45 lag 1
!
link-keepalive ethe 7/1/1 to 7/1/3 ethe 8/1/1 to 8/1/3

!
lldp run
end
```

Client 2 Configuration

The following example presents the configuration for Client #2 in the figure shown above.

```
!
lag lag1 dynamic id 1
ports ethernet 2/1/47 to 2/1/48

vlan 1905 name MAC-scaling-vlan by port
tagged ethe 1/1/1 to 1/1/3 ethe 1/1/45 ethe 3/1/1 to 3/1/3 lag 1
!
link-keepalive ethe 1/1/1 to 1/1/3 ethe 3/1/1 to 3/1/3

!
lldp run
end
```

Configuring the Per-VLAN Spanning Tree on the MCT Clients Example

External connections between clients other than the links in an MCT cluster can cause Layer 2 loops. Use STP on the MCT clients so that the MCT cluster forwards STP Bridge Protocol Data Units (BPDUs) as if the cluster were in pass-through mode.

The MCT client configuration uses Per-VLAN Spanning Tree (PVST) on the two MCT VLANS, 1901 and 1905, to use Rapid Spanning Tree (RSTP or 802.1w). The following examples are based on the network topology shown in Figure 44 on page 138.

Client 1 Configuration

```
Client-1(config)# vlan 1901 1905
Client-1(config-mvlan-1901*1905)# spanning-tree 802-1w
Client-1(config-mvlan-1901*1905)# end
```

Client 2 Configuration

```
Client-2(config)# vlan 1901
Client-2(config-vlan-1901)# spanning-tree 802-1w
Client-2(config-vlan-1901)# spanning-tree 802-1w priority 4095
Client-2(config-vlan-1901)# vlan 1905
Client-2(config-vlan-1901)# spanning-tree 802-1w
Client-2(config-vlan-1901)# end
```

The MCT cluster switches do not have the spanning tree configured, but the BPDUs are passed through, and the STP on the clients converges.

Use the **show 802-1w vlan** command to display the RSTP information for the specified port-based VLAN.

STP Configuration Example on MCT Cluster Devices

External connections from CEPs can cause Layer 2 loops. Use STP on the MCT cluster devices to prevent Layer 2 loops.

FIGURE 45 Using STP on MCT Cluster Devices

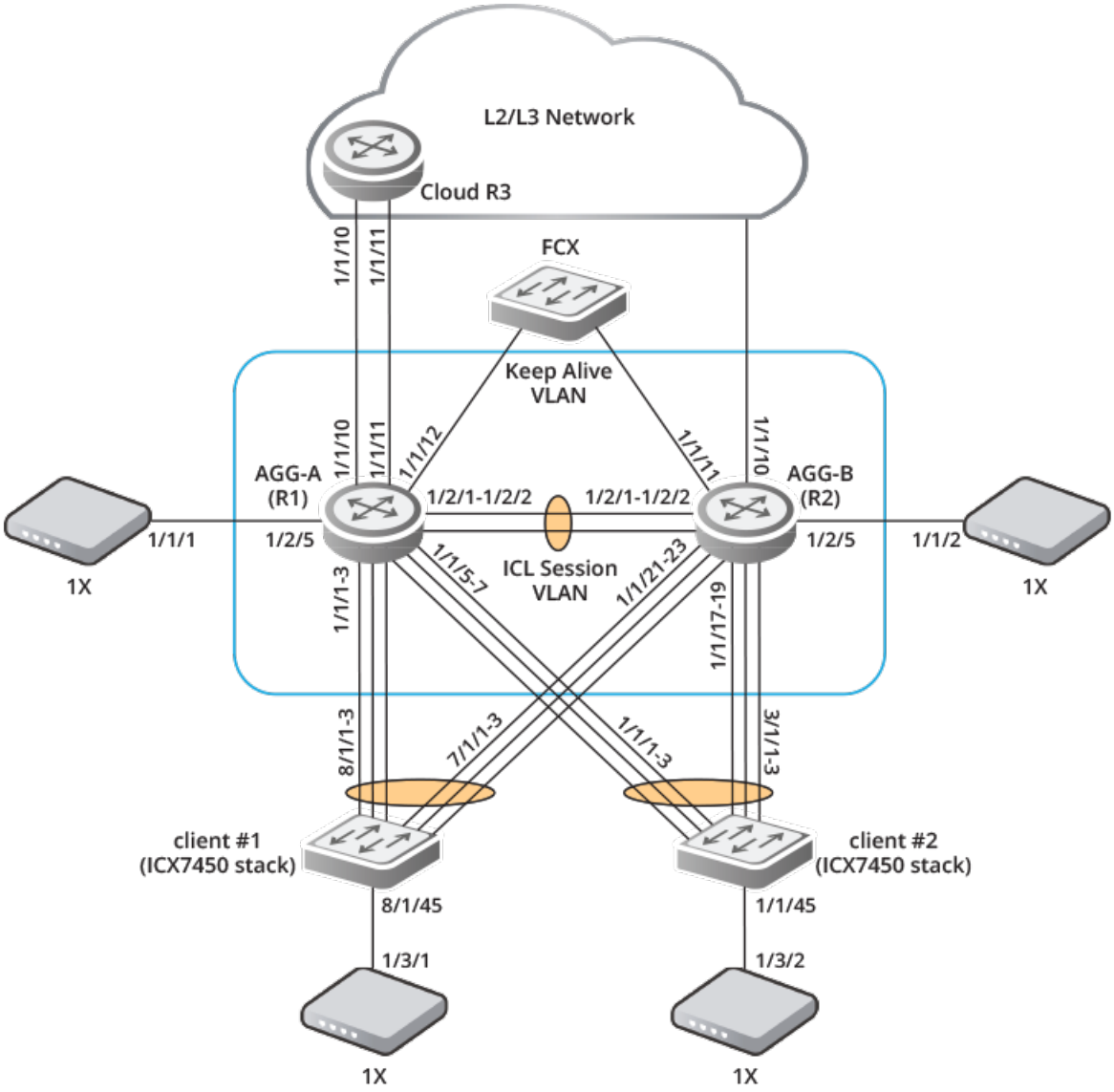

Configure the Per-VLAN Spanning Tree on the MCT Cluster Devices Example

The cluster devices are the two MCT VLANs, 1901 and 1905, which are configured using Per-VLAN Spanning Tree (PVST) to run Rapid Spanning Tree (RSTP or 802.1w). The following example is based on the network topology shown in STP Configuration Example on MCT Cluster Devices on page 141.

AGG-A (R1) Configuration

```
R1(config)# vlan 1901 1905
R1(config-mvlan-1901*1905)# spanning-tree 802-1w
R1(config-mvlan-1901*1905)# end
```

Cloud Router (R3) Configuration

```
Cloud-R3(config)# vlan 1901 1905
Cloud-R3(config-mvlan-1901*1905)# spanning-tree 802-1w
Cloud-R3(config-mvlan-1901*1905)# end
```

MVRP

- MVRP Overview 143

MVRP Overview

In a large bridged local area network with many interconnected switches, manual management of VLANs is complicated and prone to human error. Multiple VLAN Registration Protocol (MVRP) is a Multiple Registration Protocol (MRP) application that helps to create VLANs dynamically (VLAN registration) and automate the administration of VLAN membership (distribution and deregistration) within the network without manual intervention.

MVRP provides IEEE 802.1ak-compliant VLAN pruning and dynamic VLAN creation on switch ports connecting access and core switches. An MVRP-aware switch can exchange VLAN configuration information with other MVRP-aware switches, prune unnecessary broadcast and unknown unicast traffic, and dynamically create and manage VLANs on switches. MVRP allows the propagation of VLAN information from device to device. With MVRP, an access switch can be manually configured with all the desired VLANs for the network, and all other MVRP-enabled switches on the network learn those VLANs dynamically. The network administrator does not have to manually configure the VLANs in each of the devices in the topology. When the VLAN configurations on a switch are changed, MVRP automatically changes the VLAN configurations in the required switches.

MVRP maintains the following advantages:

- Reduces the broadcast, unknown-unicast, and multicast traffic (BUM traffic) scope to the interested devices or switches in the network. If there are no active users for a VLAN at a remote destination, then traffic is dropped at source itself thereby efficiently utilizing the network bandwidth.
- Reduces the chances of errors in VLAN configuration by automatically providing VLAN ID consistency across the network. In addition to this, if the VLAN configuration on a switch changes, MVRP automatically changes the VLAN configurations in the affected devices.

MVRP allows bridges in a bridged LAN to issue and revoke declarations of a VLAN attribute.

- When a port receives a VLAN attribute declaration message, it joins the VLAN and propagates that VLAN declaration on other MVRP ports.
- When a port receives a VLAN attribute withdrawal message, it leaves the VLAN and propagates that VLAN withdrawal on other MVRP ports.

Beginning with FastIron 08.0.90, GARP VLAN Registration Protocol (GVRP) is not supported on ICX platforms. MVRP is a successor to GVRP, and Ruckus recommends using MVRP which is more efficient than GVRP due to the protocol design. MVRP is not backward-compatible with GVRP and therefore will not interoperate with GVRP.

MRP messages used by MVRP

MVRP uses MRP messages to issue or withdraw declaration of VLANs to other MVRP-aware switches. The following MRP messages are used by MVRP:

- Empty: MVRP information (VLANs) is not declared and not registered.
- In: MVRP information is not declared but the VLAN is registered.
- JoinEmpty: MVRP information is declared but the VLAN is not registered.
- JoinIn: MVRP information is declared and the VLAN is registered.
- Leave: MVRP information that was previously declared is now withdrawn.
- LeaveAll: All the registered VLANs are unregistered and the VLANs need to be reregistered.
- New: The MVRP information is new and the VLAN may not be registered yet.

The JoinIn, JoinEmpty, and New messages are declarations, while Leave and LeaveAll messages are withdrawals.

MVRP Timers

MVRP uses MRP messages to make or withdraw declaration of VLANs to other MVRP-aware switches. MVRP timers define the interval at which MVRP updates (VLAN join or VLAN leave messages) are transmitted. MVRP global timers are enabled by default. Global timer configurations reflect on all MVRP-enabled ports in the system. MVRP timers are per interface level and apply only to the specified interface. MVRP timers must be set to the same values on all the devices that are participating in MVRP. Interface-level timer configuration takes precedence over global timer configurations.

MVRP has the following timers that determine the interval for VLAN declaration and withdrawal events:

- Join timer: Defines the interval for the MVRP PDU transmit that makes VLAN declaration on other MVRP-enabled interfaces.
- Leave timer: Defines the time period an MVRP-enabled interface waits after receiving a leave message on the port to remove the port from the VLAN indicated in the leave message. If the interface receives a VLAN join message before the timer expires, the VLAN remains registered.
- Leave-all timer: Defines the time interval at which a port (MVRP participant) generates LeaveAll PDUs.

MVRP Registration Modes

There are two registration modes that define the VLAN participation in MVRP:

- Normal: In this mode, the interface accepts all MVRP messages and participates in MVRP. This is the default registration mode setting.
- Forbidden: The registration mode of MVRP can be set to forbid the VLAN from participating in MVRP. If the VLAN is added to the forbidden VLAN list using the **mvrp registration-mode forbidden** command, MVRP neither declares nor registers any VLANs on the port. All the registration messages received for those VLANs are ignored. By default, the registration mode is set to Normal, which allows the VLAN to be learned or declared through MVRP.

  NOTE
  Whenever an access port is added to a VLAN or whenever MVRP ports are statically tagged to the VLAN, the registration mode of all the MVRP ports is automatically set to Fixed for that VLAN.

You can also set the applicant state of the port that defines MVRP participation of the port. If a port is configured as non-participant, MVRP PDU transmission will be prohibited on the port. By default, the applicant mode of the port is a normal participant, which allows VLAN registration and propagation of VLAN information.

MVRP Application Example

The following figure shows an example of a network that uses MVRP. This section describes one of the ways you can use MVRP in a network. Configuration Example: Implementing the Applications of MVRP lists the commands and configuration steps to implement the applications of MVRP described in the following example.

FIGURE 46 Example of MVRP

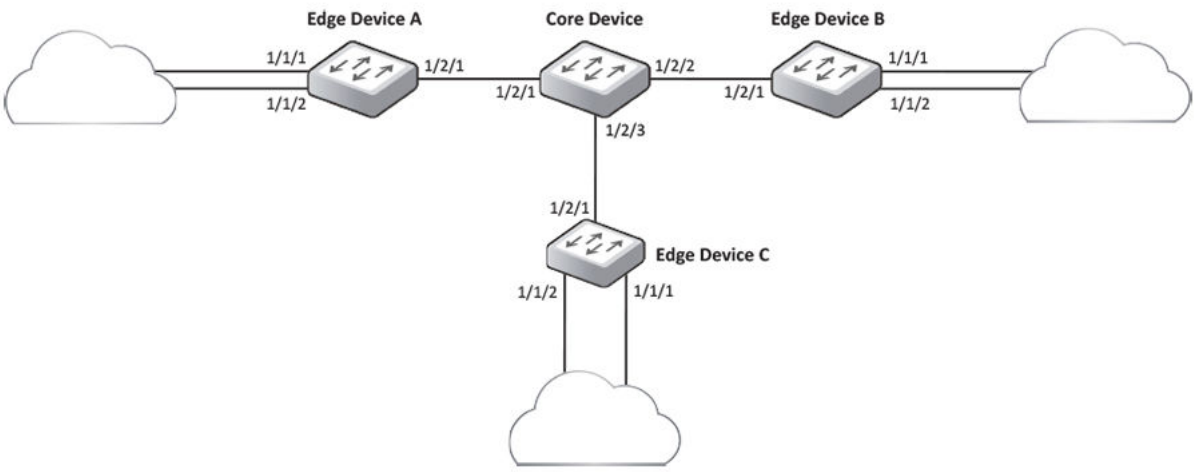

In this example, a core device is attached to three edge devices. Each of the edge devices is attached to other edge devices or host stations (represented by the clouds). The effects of MVRP in this network depend on which devices the feature is enabled.

In this configuration, all ports on the core device are enabled to learn and advertise VLAN information. The edge devices are configured to advertise their VLAN configurations on the ports connected to the core device.

Core device	Edge device A	Edge device B	Edge device C
MVRP is enabled on all ports.	• MVRP is enabled on port 1/2/1. • VLAN 20 • Port 1/1/1 (untagged) • Port 1/2/1 (auto-added to VLAN 20) • VLAN 40 • Port 1/1/2 (untagged) • Port 1/2/1 (auto-added to VLAN 40)	• MVRP is enabled on port 1/2/1. • VLAN 20 • Port 1/1/1 (untagged) • Port 1/2/2 (auto-added to VLAN 20) • VLAN 30 • Port 1/1/2 (untagged) • Port 1/2/2 (auto-added to VLAN 30)	• MVRP is enabled on port 1/2/1. • VLAN 30 • Port 1/1/1 (untagged) • Port 1/2/3 (auto-added to VLAN 30) • VLAN 40 • Port 1/1/2 (untagged) • Port 1/2/3 (auto-added to VLAN 30)

In this configuration, the edge devices are statically (manually) configured with VLAN information. The core device dynamically configures itself to be a member of each of the edge device VLANs. The operation of MVRP on the core device results in the following VLAN configuration on the device:

- VLAN 20
  - 1/2/1
  - 1/2/2
- VLAN 30
  - 1/2/2
  - 1/2/3
- VLAN 40
  - 1/2/1
  - 1/2/3

VLAN 20 traffic can now travel through the core between edge devices A and B. Likewise, VLAN 30 traffic can travel between B and C and VLAN 40 traffic can travel between A and C. If an edge device is moved to a different core port or the VLAN configuration of an edge device is changed, the core device automatically reconfigures itself to accommodate the change.

Notice that each of the ports in the dynamically created VLANs is tagged. All MVRP VLAN ports configured by MVRP are tagged, to ensure that the port can be configured for additional VLANs.

> **NOTE**
> VLAN configuration learned by MVRP does not show up in the running-config. It can be viewed in the output of the **show vlan** commands.

> **NOTE**
> This example assumes that the core device has no static VLANs configured. However, you can have static VLANs on a device that is running MVRP. MVRP can dynamically add other ports to the statically configured VLANs but cannot delete statically configured ports from the VLANs.

Configuration Example: Implementing the Applications of MVRP

This section provides the sample configuration steps to implement the MVRP application example.

> **NOTE**
> Although some of the devices in these configuration examples do not have statically configured VLANs, this is not a requirement. You always can have statically configured VLANs on a device that is running MVRP.

In this configuration, the edge devices advertise their statically configured VLANs to the core device. The core device does not have any statically configured VLANs but learns the VLANs from the edge devices.

Enter the following commands on the core device.

```
core-device(config)# mvrp enable
core-device(config)# interface ethernet 1/2/1 to 1/2/3
core-device(config-mif-1/2/1-1/2/3)# mvrp enable

core-device(config-mif-1/2/1-1/2/3)# mvrp point-to-point
```

The **mvrp enable** command enables the MVRP functionality globally.

Enter the following commands on edge device A.

```
deviceA(config)#vlan 20
deviceA(config-vlan-20)# untagged ethernet 1/1/1
Added untagged port(s) ethe 1/1/1 to port-vlan 20.

deviceA(config)#vlan 40
deviceA(config-vlan-40)# untagged ethernet 1/1/2
Added untagged port(s) ethe 1/1/2 to port-vlan 40.

deviceA(config)# mvrp enable

deviceA(config)# interface ethernet 1/2/1
deviceA(config-if-e40000-1/2/1)# mvrp enable

deviceA(config-if-e40000-1/2/1)# mvrp point-to-point
deviceA(config-if-e40000-1/2/1)# exit
```

These commands statically configure two port-based VLANs and enable MVRP on port 1/2/1.

Enter the following commands on edge device B.

```
deviceB(config)# vlan 20
deviceB(config-vlan-20)# untagged ethernet 1/1/1
Added untagged port(s) ethe 1/1/1 to port-vlan 20.
```

```
deviceB(config)# vlan 30
deviceB(config-vlan-30)# untagged ethernet 1/1/2
Added untagged port(s) ethe 1/1/2 to port-vlan 30.

deviceB(config)# mvrp enable

deviceB(config)# interface ethernet 1/2/1
deviceB(config-if-e40000-1/2/1)# mvrp enable

deviceB(config-if-e40000-1/2/1)# mvrp point-to-point
deviceB(config-if-e40000-1/2/1)# exit
```

Enter the following commands on edge device C.

```
deviceC(config)#vlan 30
deviceC(config-vlan-30)# untagged ethernet 1/1/1
Added untagged port(s) ethe 1/1/1 to port-vlan 30.

deviceC(config)# vlan 40
deviceC(config-vlan-40)# untagged ethernet 1/1/2
Added untagged port(s) ethe 1/1/2 to port-vlan 40.


deviceC(config)# mvrp enable

deviceC(config)# interface ethernet 1/2/1
deviceC(config-if-e40000-1/2/1)#mvrp enable

deviceC(config-if-e40000-1/2/1)# mvrp point-to-point
deviceC(config-if-e40000-1/2/1)# exit
```

MVRP Configuration Notes

- Single STP or single 802.1w cannot be enabled if the system is MVRP-enabled. If you want to run single STP or 802.1w, it is recommended that you configure single STP or single 802.1w before enabling MVRP.
- MVRP is not supported with PVST and MSTP and cannot co-exist with them. MVRP is only supported with single-802.1w and single-STP
- Single STP or Single 802.1w cannot be removed when MVRP is running.
- All dynamic VLANs created by the MVRP run Spanning Tree by default and hence participate in Single Span or Single 802.1w, when the system is under Single STP or single 802.1w mode.
- STP must be disabled on the default VLAN to avoid per-VLAN STP conflict with MVRP
- The default VLAN cannot be changed if the system is MVRP-enabled. Therefore, it is recommended that you change the default VLAN (optional) prior to enabling MVRP.
- Default VLAN is always in FIXED registration. Therefore, it is recommended to retain the MVRP ports in the system default VLAN and maintain the default VLAN consistency in the network.
- MVRP is not allowed on a Management port.
- VLANs that are learned dynamically cannot be deleted manually. Static VLANs cannot be deleted manually if they have dynamic ports learned by MVRP.
- Ports that are added dynamically cannot be removed manually from a dynamic or static VLAN.
- Static VLANs cannot be configured as forbidden VLANs.
- Dynamic VLAN creation by MVRP is enabled by default. If you choose to change the default behavior using the **mvrp vlan-creation-disable** command, it is recommended that you do so prior to enabling MVRP.
- Dynamic VLANs created by MVRP can be converted to static using standard VLAN commands. Similarly, MVRP-added ports can be converted to static members by retagging the ports using VLAN port tagging commands.

- VLANs created by MVRP do not support virtual routing interfaces. However, virtual routing interfaces are supported on statically configured VLANs even if MVRP adds ports to those VLANs.
- An MVRP periodic timer is not supported.
- Dynamic VLANs are not saved to the startup configuration and therefore, will not persist across a reload. However, once the system is up, the protocol will relearn the dynamic VLANs.
- MVRP is supported both on physical ports, SPX-PE ports, and on LAG ports. However, an MVRP-enabled port cannot be added as a secondary port of a LAG.
- VLAN groups cannot be configured when MVRP is enabled.
- MVRP support is limited to 512 VLANs and 128 ports because of CPU and memory constraints.

MVRP Limitations

MVRP is not supported with the following features and therefore cannot co-exist with the features.

- Per-VLAN protocols (MRP, VSRP, STP, RSTP, and PVST)
- MSTP
- MCT
- Q-in-Q (MVRP cannot be configured on Q-in-Q-enabled ports.)
- PVLAN
- RSPAN
- Topology group
- VLAN group
- BPDU tunneling
- MAC filter
- MVRP and Flexible authentication cannot be enabled on the same port.
- MVRP dynamic VLANs cannot be configured as authentication VLANs.

Configuring MVRP

The following configuration steps show basic MVRP configuration in a network topology that has two devices.

1. Enable MVRP at the system level on the devices.

```
device1(config)# mvrp enable
device2(config)# mvrp enable
```

   MVRP must be enabled globally to allow the devices to participate in the protocol.

2. Enable MVRP on uplink ports on both devices.

```
device1(config)# interface ethernet 1/1/2
device1(config-if-e10000-1/1/2)# mvrp enable

device2(config)# interface ethernet 2/1/2
device2(config-if-e10000-2/1/2)# mvrp enable
device2(config)# interface ethernet 1/1/10
device2(config-if-e10000-1/1/10)# mvrp enable
device2(config-if-e10000-2/1/2)# interface lag 1
device2(config-lag-if-lg1)# mvrp enable
```

3. Create a user VLAN on device 1.

```
device1(config)# vlan 10
```

4. Add an access port to the VLAN.

```
device1(config-vlan-10)# untagged ethernet 1/1/48
```

MVRP-enabled uplink port (1/1/2) will be auto-added to the user VLAN 10.

Device 1 declares VLAN 10 and device 2 dynamically learns it and adds the port (2/1/2) as a dynamic member.

5. (Optional) Configure MVRP timers globally.

```
device1(config)# mvrp timer join 250 leave 1200 leave-all 12000
```

MVRP global timers are enabled by default. Global timer configurations reflect on all MVRP-enabled ports. MVRP timers are per interface level and apply only to the specified interface. Interface-level timer configuration takes precedence over global timer configurations.

6. (Optional) Configure a port as a point-to-point interface for MVRP.

```
device1(config)# interface ethernet 1/1/2
device1(config-if-e10000-1/1/2)# mvrp point-to-point

device2(config)# interface ethernet 2/1/2
device2(config-if-e10000-2/1/2)# mvrp point-to-point
```

7. (Optional) Configure the applicant state of the port that defines the MVRP participation of the port.

```
device2(config)# interface ethernet 1/1/10
device2(config-if-e10000-1/1/10)# mvrp applicant-mode non-participant
```

By default, the applicant mode of the port is normal.

8. (Optional) Configure registration mode to forbid the VLAN from participating in MVRP.

By default, registration mode is set to Normal which allows the VLAN to be learned or declared through MVRP. For a static VLAN configuration, registration mode is automatically set to Fixed.

```
device2(config)# interface lag 1
device2(config-lag-if-lg1)# mvrp registration-mode forbidden vlan 10
```

9. (Optional) Disable dynamic VLAN creation by MVRP unless the VLAN that is being learned is already defined in the device.

```
device2(config)# mvrp vlan-creation-disable
```

Configuration Example: Implementing the Applications of MVRP

In the following example, a core device is attached to three edge devices. Each of the edge devices is attached to other edge devices or host stations (represented by the clouds).

The effects of MVRP in this network depend on which devices the feature is enabled.

FIGURE 47 MVRP Network

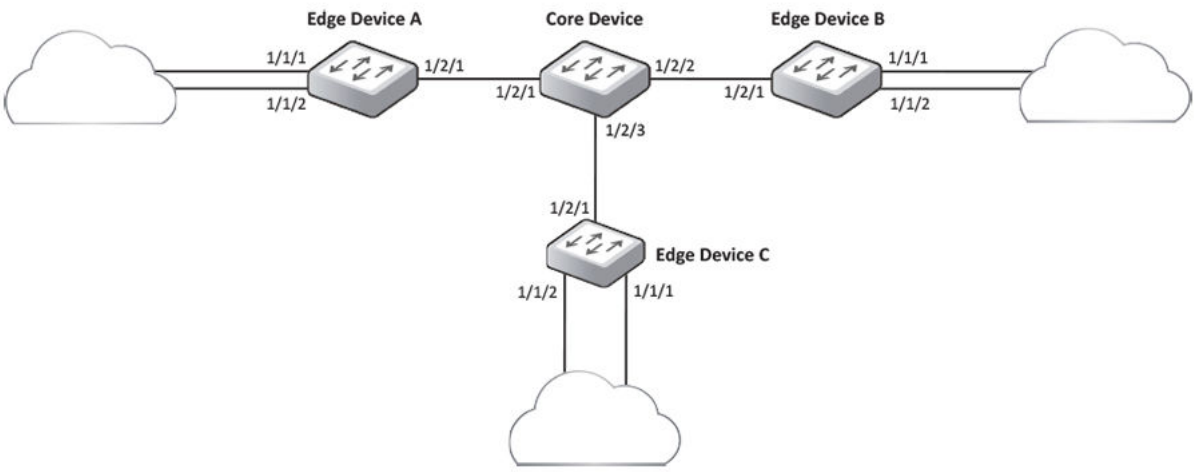

NOTE
Although some of the devices in these configuration examples do not have statically configured VLANs, this is not a requirement. You always can have statically configured VLANs on a device that is running MVRP.

In this configuration, the edge devices advertise their statically configured VLANs to the core device. The core device does not have any statically configured VLANs but learns the VLANs from the edge devices.

Enter the following commands on the core device.

```
core-device(config)# mvrp enable
core-device(config)# interface ethernet 1/2/1 to 1/2/3
core-device(config-mif-1/2/1-1/2/3)# mvrp enable

core-device(config-mif-1/2/1-1/2/3)# mvrp point-to-point
```

The **mvrp enable** command enables the MVRP functionality globally.

Enter the following commands on edge device A.

```
deviceA(config)#vlan 20
deviceA(config-vlan-20)# untagged ethernet 1/1/1
Added untagged port(s) ethe 1/1/1 to port-vlan 20.

deviceA(config)#vlan 40
deviceA(config-vlan-40)# untagged ethernet 1/1/2
Added untagged port(s) ethe 1/1/2 to port-vlan 40.

deviceA(config)# mvrp enable

deviceA(config)# interface ethernet 1/2/1
deviceA(config-if-e40000-1/2/1)# mvrp enable

deviceA(config-if-e40000-1/2/1)# mvrp point-to-point
deviceA(config-if-e40000-1/2/1)# exit
```

These commands statically configure two port-based VLANs and enable MVRP on port 1/2/1.

Enter the following commands on edge device B.

```
deviceB(config)# vlan 20
deviceB(config-vlan-20)# untagged ethernet 1/1/1
Added untagged port(s) ethe 1/1/1 to port-vlan 20.

deviceB(config)# vlan 30
```

```
deviceB(config-vlan-30)# untagged ethernet 1/1/2
Added untagged port(s) ethe 1/1/2 to port-vlan 30.

deviceB(config)# mvrp enable

deviceB(config)# interface ethernet 1/2/1
deviceB(config-if-e40000-1/2/1)# mvrp enable

deviceB(config-if-e40000-1/2/1)# mvrp point-to-point
deviceB(config-if-e40000-1/2/1)# exit
```

Enter the following commands on edge device C.

```
deviceC(config)#vlan 30
deviceC(config-vlan-30)# untagged ethernet 1/1/1
Added untagged port(s) ethe 1/1/1 to port-vlan 30.

deviceC(config)# vlan 40
deviceC(config-vlan-40)# untagged ethernet 1/1/2
Added untagged port(s) ethe 1/1/2 to port-vlan 40.


deviceC(config)# mvrp enable

deviceC(config)# interface ethernet 1/2/1
deviceC(config-if-e40000-1/2/1)#mvrp enable

deviceC(config-if-e40000-1/2/1)# mvrp point-to-point
deviceC(config-if-e40000-1/2/1)# exit
```

Spanning Tree Protocol

- STP overview 153
- Standard STP parameter configuration 153
- STP feature configuration 161
- PVST/PVST+ compatibility 211
- PVRST compatibility 219
- BPDU guard 219
- Root guard 222
- Designated Protection 223
- Packet InError Detection 224
- Error disable recovery 225
- 802.1s Multiple Spanning Tree Protocol 227
- xSTP Syslog for BPDU Threshold 240

STP overview

STP (IEEE 802.1D bridge protocol) is supported on all RUCKUS ICX devices. STP detects and eliminates logical loops in the network. STP also ensures that the least cost path is taken when multiple paths exist between ports or VLANs. If the selected path fails, STP searches for and then establishes an alternate path to prevent or limit retransmission of data.

The Spanning Tree Protocol (STP) eliminates Layer 2 loops in networks, by selectively blocking some ports and allowing other ports to forward traffic, based on global (bridge) and local (port) parameters you can configure.

STP related features, such as RSTP and PVST, extend the operation of standard STP, enabling you to fine-tune standard STP and avoid some of its limitations.

You can enable or disable STP on a global basis (for the entire device), a port-based VLAN basis (for the individual Layer 2 broadcast domain), or an individual port basis.

Configuration procedures are provided for the standard STP bridge and port parameters.

Standard STP parameter configuration

RUCKUS Layer 2 Switches and Layer 3 Switches support standard STP as described in the IEEE 802.1D specification. STP is enabled by default on Layer 2 Switches but disabled by default on Layer 3 Switches.

By default, each port-based VLAN on a RUCKUS device runs a separate spanning tree (a separate instance of STP). A RUCKUS device has one port-based VLAN (VLAN 1) by default that contains all the device ports. Thus, by default each RUCKUS device has one spanning tree. However, if you configure additional port-based VLANs on a RUCKUS device, then each of those VLANs on which STP is enabled and VLAN 1 all run separate spanning trees.

If you configure a port-based VLAN on the device, the VLAN has the same STP state as the default STP state on the device. Thus, on Layer 2 Switches, new VLANs have STP enabled by default. On Layer 3 Switches, new VLANs have STP disabled by default. You can enable or disable STP in each VLAN separately. In addition, you can enable or disable STP on individual ports.

STP parameters and defaults

The following table lists the default STP states for RUCKUS devices.

TABLE 17 Default STP states

Device type	Default STP type	Default STP state	Default STP state of new VLANs[1]
Switch image default	STP 802.1d	Enabled	Enabled
Router image default	No span	Enabled	Disabled
Base L3 image default	No span	Disabled	Disabled

1. When you create a port-based VLAN, the new VLAN STP state is the same as the default STP state on the device. The new VLAN does not inherit the STP state of the default VLAN. The Single Spanning Tree Protocol (SSTP) is another type of STP. SSTP includes all VLANs on which STP is enabled in a single spanning tree. Refer to Single Spanning Tree (SSTP) on page 205.

The following table lists the default STP bridge parameters. The bridge parameters affect the entire spanning tree. If you are using MSTP, the parameters affect the VLAN. If you are using SSTP, the parameters affect all VLANs that are members of the single spanning tree.

TABLE 18 Default STP bridge parameters

Parameter	Description	Default and valid values
Forward Delay	The period of time spent by a port in the listening and learning state before moving on to the learning or forwarding state, respectively. The forward delay value is also used for the age time of dynamic entries in the filtering database, when a topology change occurs.	15 seconds Possible values: 4 - 30 seconds
Maximum Age	The interval a bridge will wait for a configuration BPDU from the root bridge before initiating a topology change.	20 seconds Possible values: 6 - 40 seconds
Hello Time	The interval of time between each configuration BPDU sent by the root bridge.	2 seconds Possible values: 1 - 10 seconds
Priority	A parameter used to identify the root bridge in a spanning tree (instance of STP). The bridge with the lowest value has the highest priority and is the root. A higher numerical value means a lower priority; thus, the highest priority is 0.	32768 Possible values: 0 - 65535

NOTE
If you plan to change STP bridge timers, RUCKUS recommends that you stay within the following ranges, from section 8.10.2 of the IEEE STP specification. 2 * (forward_delay -1) >= max_agemax_age >= 2 * (hello_time +1)

The following table lists the default STP port parameters. The port parameters affect individual ports and are separately configurable on each port.

TABLE 19 Default STP port parameters

Parameter	Description	Default and valid values
Priority	The preference that STP gives this port relative to other ports for forwarding traffic out of the spanning tree. A higher numerical value means a lower priority.	128 Possible values: 0 - 240 (configurable in increments of 16)
Path Cost	The cost of using the port to reach the root bridge. When selecting among multiple links to the root bridge, STP chooses the link with the lowest path cost and blocks the other paths. Each port type has its own default STP path cost.	10 Mbps - 100 100 Mbps - 19 Gbps - 4 10 Gbps - 2 Possible values are 0 - 65535

Enabling or disabling the Spanning Tree Protocol (STP)

STP is *enabled* by default on devices running Layer 2 code. STP is *disabled* by default on devices running Layer 3 code.

You can enable or disable STP on the following levels:

- Globally - Affects all ports and port-based VLANs on the device.
- Port-based VLAN - Affects all ports within the specified port-based VLAN. When you enable or disable STP within a port-based VLAN, the setting overrides the global setting. Thus, you can enable STP for the ports within a port-based VLAN even when STP is globally disabled, or disable the ports within a port-based VLAN when STP is globally enabled.
- Individual port - Affects only the individual port. However, if you change the STP state of the LAG virtual interface, the change affects all ports in the LAG.

NOTE
The CLI converts the STP groups into topology groups when you save the configuration. For backward compatibility, you can still use the STP group commands. However, the CLI converts the commands into the topology group syntax. Likewise, the **show stp-group** command displays STP topology groups.

Configuration modes for STP

The following configuration modes apply while configuring STP.

- Spanning-tree single - This configuration can be enabled on systems running IEEE 802.1D. The single spanning tree controls all the 4000 VLANs. You can opt in and out of this single spanning tree using the **spanning-tree** command under the VLAN prompt.
- Spanning-tree single 802.1w - This configuration can be enabled on systems running IEEE 802.1w. The single rapid spanning tree controls all the 4000 VLANs. The VLAN can opt in and out of this single rapid spanning tree using the **spanning-tree** command under the VLAN prompt. If there is a “spanning-tree” configuration under the VLAN, that VLAN will be with that single 802.1w instance’s control, which implies that the VLAN traffic is subject to blocking or forwarding by that spanning tree instance.
- Per VLAN spanning tree - In this configuration mode you can turn on 802.1D or 802.1w (Rapid Spanning Tree) at the VLAN level individually.

Enabling or disabling STP globally

Use the following method to enable or disable STP on a device on which you have not configured port-based VLANs.

NOTE
When you configure a VLAN, the VLAN inherits the global STP settings. However, once you begin to define a VLAN, you can no longer configure standard STP parameters globally using the CLI. From that point on, you can configure STP only within individual VLANs.

To enable STP for all ports in all VLANs on a RUCKUS ICX device, enter the **spanning-tree** command.

```
device(config)# spanning-tree
```

The **spanning-tree** command enables a separate spanning tree in each VLAN, including the default VLAN.

To set system maximum value for number of spanning tree instances, enter the command such as the following:

```
device(config)# system-max spanning-tree 254
```

NOTE
The number of spanning tree instances ranges from 1 through 254 on ICX 7850, ICX 7750, ICX 7450, ICX 7250, and ICX 7650 devices. The range of STP instances on RUCKUS ICX 7150 device is from 1 through 253. The default value is 128 on ICX 7750 and ICX 7650 devices and 32 on ICX 7850, ICX 7450, ICX 7250, and RUCKUS ICX 7150 devices.

Enabling or disabling STP in a port-based VLAN

Use the following procedure to disable or enable STP on a device on which you have configured a port-based VLAN. Changing the STP state in a VLAN affects only that VLAN.

To enable STP for all ports in a port-based VLAN, enter commands such as the following.

```
device(config)# vlan 10
device(config-vlan-10)# spanning-tree
```

Enabling or disabling STP on an individual port

Use the following procedure to disable or enable STP on an individual port.

> **NOTE**
> If you change the STP state of the LAG virtual interface, it affects all ports in the LAG.

To enable STP on an individual port, enter commands such as the following.

```
device(config)# interface 1/1/1
device(config-if-e1000-1/1/1)# spanning-tree
```

Changing STP bridge and port parameters

STP bridge and port parameters are preset with default values but various parameters such as priority can be modified using CLI commands.

Table 18 on page 154 and Table 19 on page 154 list the default STP parameters. If you need to change the default value for an STP parameter, use the following procedures.

You can modify the following STP Parameters:

- Bridge parameters—forward delay, maximum age, hello time, and priority
- Port parameters—priority and path cost

Changing STP bridge parameters

> **NOTE**
> If you plan to change STP bridge timers, RUCKUS recommends that you stay within the following ranges, from section 8.10.2 of the IEEE STP specification. 2 * (forward_delay -1) >= max_age max_age >= 2 * (hello_time +1)

To change a STP bridge priority on a RUCKUS device to the highest value to make the device the root bridge, enter the following command.

```
device(config)#spanning-tree priority 0
```

The command in this example changes the priority on a device on which you have not configured port-based VLANs. The change applies to the default VLAN. If you have configured a port-based VLAN on the device, you can configure the parameters only at the configuration level for individual VLANs. Enter commands such as the following.

```
device(config)#vlan 20
device(config-vlan-20)#spanning-tree priority 0
```

To make this change in the default VLAN, enter the following commands.

```
device(config)#vlan 1
device(config-vlan-1)#spanning-tree priority 0
```

The **forward-delay***value* parameter specifies the forward delay and can be a value from 4 - 30 seconds. The default is 15 seconds.

NOTE
You can configure a RUCKUS device for faster convergence (including a shorter forward delay) using Fast Span or Fast Uplink Span. Refer to STP feature configuration on page 161.

The **hello-time** *value* parameter specifies the hello time and can be a value from 1 - 10 seconds. The default is 2 seconds.

NOTE
This parameter applies only when this device or VLAN is the root bridge for its spanning tree.

The **maximum-age** *value* parameter specifies the amount of time the device waits for receipt of a configuration BPDU from the root bridge before initiating a topology change. You can specify from 6 - 40 seconds. The default is 20 seconds.

The **priority** *value* parameter specifies the priority and can be a value from 0 - 65535. A higher numerical value means a lower priority. Thus, the highest priority is 0. The default is 32768.

You can specify some or all of these parameters on the same command line. If you specify more than one parameter, you must specify them in the order shown above, from left to right.

Changing STP port parameters

To change the path and priority costs for a port, enter commands such as the following.

```
device(config)#vlan 10
device(config-vlan-10)#spanning-tree ethernet 5 path-cost 15 priority 64
```

The **path-cost** *value* parameter specifies the port cost as a path to the spanning tree root bridge. STP prefers the path with the lowest cost. You can specify a value from 0 - 65535.

The default depends on the port type:

- 10 Mbps - 100
- 100 Mbps - 19
- Gbps - 4
- 10 Gbps - 2
- The **priority***value* parameter specifies the preference that STP gives this port relative to other ports for forwarding traffic out of the spanning tree. If you are upgrading a device that has a configuration saved under an earlier software release, and the configuration contains a value from 0 - 7 for a port STP priority, the software changes the priority to the default when you save the configuration while running the new release.

The **disable** and **enable** parameter disables or re-enables STP on the port. The STP state change affects only this VLAN. The port STP state in other VLANs is not changed.

STP protection enhancement

STP protection provides the ability to prohibit an end station from initiating or participating in an STP topology change.

The 802.1W Spanning Tree Protocol (STP) detects and eliminates logical loops in a redundant network by selectively blocking some data paths (ports) and allowing only the best data paths to forward traffic.

In an STP environment, switches, end stations, and other Layer 2 devices use Bridge Protocol Data Units (BPDUs) to exchange information that STP will use to determine the best path for data flow. When a Layer 2 device is powered ON and connected to the network, or when a Layer 2 device goes down, it sends out an STP BPDU, triggering an STP topology change.

In some instances, it is unnecessary for a connected device, such as an end station, to initiate or participate in an STP topology change. In this case, you can enable the STP Protection feature on the RUCKUS port to which the end station is connected. STP Protection disables the connected device ability to initiate or participate in an STP topology change, by dropping all BPDUs received from the connected device.

Enabling STP protection

You can enable STP Protection on a per-port basis.

To prevent an end station from initiating or participating in STP topology changes, enter the following command at the Interface level of the CLI.

```
device#(config) interface ethernet 2
device#(config-if-e1000-2)#stp-protect
```

This command causes the port to drop STP BPDUs sent from the device on the other end of the link.

Enter the **no** form of the command to disable STP protection on the port.

Clearing BPDU drop counters

For each port that has STP Protection enabled, the RUCKUS device counts and records the number of dropped BPDUs. You can use CLI commands to clear the BPDU drop counters for all ports on the device, or for a specific port on the device.

To clear the BPDU drop counters for all ports on the device that have STP Protection enabled, enter the following command in the Global configuration mode of the CLI.

```
device(config)# clear stp-protect-statistics
```

To clear the BPDU drop counter for a specific port that has STP Protection enabled, enter the following command.

```
device# clear stp-protect-statistics ethernet 1/1/2
```

Viewing the STP Protection Configuration

You can view the STP Protection configuration for all ports on a device, or for a specific port only. The **show stp-protect** command output shows the port number on which STP Protection is enabled, and the number of BPDUs dropped by each port.

To view the STP Protection configuration for all ports on the device, enter the following command at any level of the CLI.

```
device# show stp-protect
Port ID        BPDU Drop Count
1/1/3                  478
1/1/5                  213
1/1/6                    0
1/1/12                  31
```

To view STP Protection configuration for a specific port, enter the following command at any level of the CLI.

```
device# show stp-protect ethernet 1/1/3
STP-protect is enabled on port 1/1/3.  BPDU drop count is 478
```

If you enter the **show stp-protect** command for a port that does not have STP protection enabled, the following message displays on the console.

```
device# show stp-protect ethernet 1/1/4
STP-protect is not enabled on port 1/1/4.
```

Displaying STP information

You can display the following Spanning Tree Protocol (STP) information:

- All the global and interface STP settings

- CPU utilization statistics
- Detailed STP information for each interface
- STP state information for a port-based VLAN
- STP state information for an individual interface

Displaying STP information for an entire device

To display STP information, enter the following command at any level of the CLI.

```
device# show span
VLAN 1 BPDU cam_index is 3 and the Master DMA Are(HEX)
STP instance owned by VLAN 1
Global STP (IEEE 802.1D) Parameters:
VLAN      Root              Root    Root    Prio    Max    He-    Ho-    Fwd     Last     Chg    Bridge
ID        ID                Cost    Port    rity    Age    llo    ld     dly     Chang    cnt    Address
                                            Hex     sec    sec    sec    sec     sec
1         800000e0804d4a00  0        Root    8000   20     2      1      15       689      1
00e0804d4a00
Port STP Parameters:
Port         Prio     Path     State        Fwd     Design    Designated        Designated
Num          rity     Cost                  Trans   Cost      Root              Bridge
             Hex
1/1/1        80       19       FORWARDING   1       0         800000e0804d4a00  800000e0804d4a00
1/1/2        80       0        DISABLED     0       0         0000000000000000  0000000000000000
1/1/3        80       0        DISABLED     0       0         0000000000000000  0000000000000000
1/1/4        80       0        DISABLED     0       0         0000000000000000  0000000000000000
1/1/5        80       19       FORWARDING   1       0         800000e0804d4a00  800000e0804d4a00
1/1/6        80       19       BLOCKING     0       0         800000e0804d4a00  800000e0804d4a00
1/1/7        80       0        DISABLED     0       0         0000000000000000  0000000000000000
<lines for remaining ports excluded for brevity>
```

The **vlan***vlan-id* parameter displays STP information for the specified port-based VLAN.

The **pvst-mode** parameter displays STP information for the device Per VLAN Spanning Tree (PVST+) compatibility configuration. Refer to PVST/PVST+ compatibility on page 211

The *num* parameter displays only the entries after the number you specify. For example, on a device with three port-based VLANs, if you enter 1, then information for the second and third VLANs is displayed, but information for the first VLAN is not displayed. Information is displayed according to VLAN number, in ascending order. The entry number is not the same as the VLAN number. For example, if you have port-based VLANs 1, 10, and 2024, then the command output has three STP entries. To display information for VLANs 10 and 2024 only, enter **show span 1** .

The **detail** parameter and its additional optional parameters display detailed information for individual ports. Refer to Displaying detailed STP information for each interface on page 159.

Displaying the STP state of a port-based VLAN

When you display information for a port-based VLAN, that information includes the STP state of the VLAN.

To display information for a port-based VLAN, enter a command such as the following at any mode of the CLI.

```
device# show vlans
Total PORT-VLAN entries: 2
Maximum PORT-VLAN entries: 16
legend: [S=Slot]
PORT-VLAN 1, Name DEFAULT-VLAN, Priority level0, Spanning tree On
 Untagged Ports: (S3)  1  2  3  4  5  6  7  8  9 10 11 12 13 14 15 16
 Untagged Ports: (S3) 17 18 19 20 21 22 23 24
 Untagged Ports: (S4)  2  3  4  5  6  7  8  9 10 11 12 13 14 15 16 17
 Untagged Ports: (S4) 18 19 20 21 22 23 24
   Tagged Ports: None
PORT-VLAN 2, Name greenwell, Priority level0, Spanning tree Off
 Untagged Ports: (S1)  1  2  3  4  5  6  7  8
```

```
 Untagged Ports: (S4)  1
   Tagged Ports: None
```

Displaying detailed STP information for each interface

To display the detailed STP information, enter the following command at any mode of the CLI.

```
device# show span detail
========================================================================
VLAN 1 - MULTIPLE SPANNING TREE (MSTP) ACTIVE
========================================================================
Bridge identifier - 0x800000e0804d4a00
Active global timers - Hello: 0
Port 1/1/1 is FORWARDING
Port - Path cost: 19, Priority: 128, Root: 0x800000e052a9bb00
Designated - Bridge: 0x800000e052a9bb00, Interface: 1, Path cost: 0
Active Timers - None
BPDUs - Sent: 11, Received: 0
Port 1/1/2 is DISABLED
Port 1/1/3 is DISABLED
Port 1/1/4 is DISABLED <lines for remaining ports excluded for brevity>
```

If a port is disabled, the only information shown by this command is "DISABLED". If a port is enabled, this display shows the following information.

NOTE
If the configuration includes VLAN groups, the **show span detail** command displays the master VLANs of each group but not the member VLANs within the groups. However, the command does indicate that the VLAN is a master VLAN. The **show span detail vlan** *vlan-id* command displays the information for the VLAN even if it is a member VLAN. To list all the member VLANs within a VLAN group, enter the **show vlan-group** [*group-id*] command.

Displaying detailed STP information for a single port in a specific VLAN

Enter a command such as the following to display STP information for an individual port in a specific VLAN.

```
device# show span detail vlan 1 ethernet 1/1/7
Port 1/1/7 is FORWARDING
Port - Path cost: 19, Priority: 128, Root: 0x800000e052a9bb00
Designated - Bridge: 0x800000e052a9bb00, Interface: 7, Path cost: 0
Active Timers - None
BPDUs - Sent: 29, Received: 0
```

Displaying STP state information for an individual interface

To display STP state information for an individual port, you can use the methods in Displaying STP information for an entire device on page 159 or Displaying detailed STP information for each interface on page 159. You also can display STP state information for a specific port using the following method.

To display information for a specific port, enter a command such as the following at any level of the CLI.

```
device#show interface ethernet 1/1/3
FastEthernet 1/1/3 is up, line protocol is up
Port up for 1 hour 50 minutes 30 seconds
  Hardware is FastEthernet, address is 0000.00a9.bb49 (bia 0000.00a9.bb49)
  Configured speed auto, actual 100Mbit, configured duplex fdx, actual fdx
  Member of L2 VLAN ID 1, port is untagged, port state is FORWARDING
  STP configured to ON
, priority is level0, flow control enabled
  mirror disabled, monitor disabled
  Not member of any active trunks
  Not member of any configured trunks
  No port name
  MTU 1518 bytes, encapsulation ethernet
  5 minute input rate: 352 bits/sec, 0 packets/sec, 0.00% utilization
```

```
  5 minute output rate: 0 bits/sec, 0 packets/sec, 0.00% utilization
  1238 packets input, 79232 bytes, 0 no buffer
  Received 686 broadcasts, 0 runts, 0 giants
  0 input errors, 0 CRC, 0 frame, 0 ignored
  529 multicast
  918 packets output, 63766 bytes, 0 underruns
  0 output errors, 0 collisions
```

The STP information is shown in bold type in this example.

You also can display the STP states of all ports by entering the show interface brief command such as the following, which uses the **brief** parameter.

```
device#show interface brief
Port  Link State     Dupl Speed Trunk Tag Priori MAC           Name
1/1/1   Down None      None None  None  No  level0 0000.00a9.bb00
1/1/2   Down None      None None  None  No  level0 0000.00a9.bb01
1/1/3   Down None      None None  None  No  level0 0000.00a9.bb02
1/1/4   Down None      None None  None  No  level0 0000.00a9.bb03
1/1/5   Down None      None None  None  No  level0 0000.00a9.bb04
1/1/6   Down None      None None  None  No  level0 0000.00a9.bb05
1/1/7   Down None      None None  None  No  level0 0000.00a9.bb06
1/1/8   Down None      None None  None  No  level0 0000.00a9.bb07
.
. some rows omitted for brevity
.
1/3/10  Down None      None None  None  No  level0 0000.00a9.bb4a
1/3/11  Up   Forward
   Full 100M  None  No  level0 0000.00a9.bb49
```

In the example above, only one port, 1/3/11, is forwarding traffic toward the root bridge.

STP feature configuration

Spanning Tree Protocol (STP) features extend the operation of standard STP, enabling you to fine- tune standard STP and avoid some of its limitations.

This section describes how to configure these parameters on RUCKUS Layer 3 Switches using the CLI.

Fast port span

When STP is running on a device, message forwarding is delayed during the spanning tree recalculation period following a topology change. The STP forward delay parameter specifies the period of time a bridge waits before forwarding data packets. The forward delay controls the listening and learning periods of STP reconvergence. You can configure the forward delay to a value from 4 - 30 seconds. The default is 15 seconds. Thus, using the standard forward delay, convergence requires 30 seconds (15 seconds for listening and an additional 15 seconds for learning) when the default value is used.

This slow convergence is undesirable and unnecessary in some circumstances. The Fast Port Span feature allows certain ports to enter the forwarding state in four seconds. Specifically, Fast Port Span allows faster convergence on ports that are attached to end stations and thus do not present the potential to cause Layer 2 forwarding loops. Because the end stations cannot cause forwarding loops, they can safely go through the STP state changes (blocking to listening to learning to forwarding) more quickly than is allowed by the standard STP convergence time. Fast Port Span performs the convergence on these ports in four seconds (two seconds for listening and two seconds for learning).

In addition, Fast Port Span enhances overall network performance in the following ways:

- Fast Port Span reduces the number of STP topology change notifications on the network. When an end station attached to a Fast Span port comes up or down, the RUCKUS device does not generate a topology change notification for the port. In this situation, the notification is unnecessary since a change in the state of the host does not affect the network topology.

- Fast Port Span eliminates unnecessary MAC cache aging that can be caused by topology change notifications. Bridging devices age out the learned MAC addresses in their MAC caches if the addresses are unrefreshed for a given period of time, sometimes called the MAC aging interval. When STP sends a topology change notification, devices that receive the notification use the value of the STP forward delay to quickly age out their MAC caches. For example, if a device normal MAC aging interval is 5 minutes, the aging interval changes temporarily to the value of the forward delay (for example, 15 seconds) in response to an STP topology change.

In normal STP, the accelerated cache aging occurs even when a single host goes up or down. Because Fast Port Span does not send a topology change notification when a host on a Fast Port Span port goes up or down, the unnecessary cache aging that can occur in these circumstances under normal STP is eliminated.

Fast Port Span is a system-wide parameter and is enabled by default. Thus, when you boot a device, all the ports that are attached only to end stations run Fast Port Span. For ports that are not eligible for Fast Port Span, such as ports connected to other networking devices, the device automatically uses the normal STP settings. If a port matches any of the following criteria, the port is ineligible for Fast Port Span and uses normal STP instead:

- The port is 802.1Q tagged
- The port is a member of a trunk group
- The port has learned more than one active MAC address
- An STP Configuration BPDU has been received on the port, thus indicating the presence of another bridge on the port.

You also can explicitly exclude individual ports from Fast Port Span if needed. For example, if the only uplink ports for a wiring closet switch are Gbps ports, you can exclude the ports from Fast Port Span.

Disabling and re-enabling fast port span

Fast Port Span is a system-wide parameter and is enabled by default. Therefore, all ports that are eligible for Fast Port Span use it.

To disable or re-enable Fast Port Span, enter the following commands.

```
device(config)# no fast port-span
device(config)# write memory
```

NOTE
The **fast port-span** command has additional parameters that let you exclude specific ports. These parameters are shown in the following section.

To re-enable Fast Port Span, enter the following commands.

```
device(config)# fast port-span
device(config)# write memory
```

Excluding specific ports from fast port span

To exclude a port from Fast Port Span while leaving Fast Port Span enabled globally, enter commands such as the following.

```
device(config)# fast port-span exclude ethernet 1/1/7
device(config)# write memory
```

To exclude a set of ports from Fast Port Span, enter commands such as the following.

```
device(config)# fast port-span exclude ethernet 1/1/1 ethernet 1/2/2 ethernet 1/2/3
device(config)# write memory
```

To exclude a contiguous (unbroken) range of ports from Fast Span, enter commands such as the following.

```
device(config)# fast port-span exclude ethernet 1/1/1 to 1/1/24
device(config)# write memory
```

To re-enable Fast Port Span on a port, enter a command such as the following.

```
device(config)# no fast port-span exclude ethernet 1/1/1
device(config)# write memory
```

This command re-enables Fast Port Span on port 1 only and does not re-enable Fast Port Span on other excluded ports. You also can re-enable Fast Port Span on a list or range of ports using the syntax shown above this example.

To re-enable Fast Port Span on all excluded ports, disable and then re-enable Fast Port Span by entering the following commands.

```
device(config)# no fast port-span
device(config)# fast port-span
device(config)# write memory
```

Disabling and then re-enabling Fast Port Span clears the exclude settings and thus enables Fast Port Span on all eligible ports. To make sure Fast Port Span remains enabled on the ports following a system reset, save the configuration changes to the startup-config file after you re-enable Fast Port Span. Otherwise, when the system resets, those ports will again be excluded from Fast Port Span.

Fast Uplink Span

The Fast Port Span feature described in the previous section enhances STP performance for end stations. The Fast Uplink Span feature enhances STP performance for wiring closet switches with redundant uplinks. Using the default value for the standard STP forward delay, convergence following a transition from an active link to a redundant link can take 30 seconds (15 seconds for listening and an additional 15 seconds for learning).

You can use the Fast Uplink Span feature on a device deployed as a wiring closet switch to decrease the convergence time for the uplink ports to another device to just one second. The new Uplink port directly goes to forward mode (bypassing listening and learning modes). The wiring closet switch must be a RUCKUS ICX device but the device at the other end of the link can be a RUCKUS ICX device or another vendor's switch.

Configuration of the Fast Uplink Span feature takes place entirely on the RUCKUS ICX device. To configure the Fast Uplink Span feature, specify a group of ports that have redundant uplinks on the wiring closet switch (RUCKUS ICX device). If the active link becomes unavailable, the Fast Uplink Span feature transitions the forwarding to one of the other redundant uplink ports in just one second. All Fast Uplink Span-enabled ports are members of a single Fast Uplink Span group.

NOTE
To avoid the potential for temporary bridging loops, RUCKUS recommends that you use the Fast Uplink feature only for wiring closet switches (switches at the edge of the network cloud). In addition, enable the feature only on a group of ports intended for redundancy, so that at any given time only one of the ports is expected to be in the forwarding state.

NOTE
When the wiring closet switch (RUCKUS ICX device) first comes up or when STP is first enabled, the uplink ports still must go through the standard STP state transition without any acceleration. This behavior guards against temporary routing loops as the switch tries to determine the states for all the ports. Fast Uplink Span acceleration applies only when a working uplink becomes unavailable.

Active uplink port failure

The active uplink port is the port elected as the root port using the standard STP rules. All other ports in the group are redundant uplink ports. If an active uplink port becomes unavailable, Fast Uplink Span transitions the forwarding of traffic to one of the redundant ports in the Fast Uplink Span group in one second bypassing listening and learning port states.

Switchover to the active uplink port

When a failed active uplink port becomes available again, switchover from the redundant port to the active uplink port is delayed by 30 seconds. The delay allows the remote port to transition to forwarding mode using the standard STP rules. After 30 seconds, the blocked active uplink port begins forwarding in just one second and the redundant port is blocked.

NOTE
Use caution when changing the spanning tree priority. If the switch becomes the root bridge, Fast Uplink Span will be disabled automatically.

Fast Uplink Span Rules for LAGs

If you add a port to a Fast Uplink Span group that is a member of a LAG, the following rules apply:

- If you add the LAG virtual interface of a LAG to the Fast Uplink Span group, all other ports in the LAG are automatically included in the group. Similarly, if you remove the LAG virtual interface from the Fast Uplink Span group, the other ports in the LAG are automatically removed from the Fast Uplink Span group.
- You cannot add a subset of the ports in a LAG to the Fast Uplink Span group. All ports in a LAG have the same Fast Uplink Span property, as they do for other port properties.
- If the working LAG is partially down but not completely down, no switch-over to the backup occurs. This behavior is the same as in the standard STP feature.
- If the working LAG is completely down, a backup LAG can go through an accelerated transition only if the following are true:
  - The LAG is included in the fast uplink group.
  - All other ports except those in this LAG are either disabled or blocked. The accelerated transition applies to all ports in this LAG.

When the original working LAG comes back (partially or fully), the transition back to the original topology is accelerated if the conditions listed above are met.

Configuring a Fast Uplink Span Port Group

To configure a group of ports for Fast Uplink Span, enter the following commands:

```
device(config)# fast uplink-span ethernet 1/1/1 to 1/1/4
device(config)# write memory
```

This example configures four ports, 1/1/1 - 1/1/4, as a Fast Uplink Span group. In this example, all four ports are connected to a wiring closet switch. Only one of the links is expected to be active at any time. The other links are redundant. For example, if the link on port 1/1/4 is the active link on the wiring closet switch but becomes unavailable, one of the other links takes over. Because the ports are configured in a Fast Uplink Span group, the STP convergence takes one second instead of taking at least 30 seconds using the standard STP forward delay.

You can add ports to a Fast Uplink Span group by entering the fast uplink-span command additional times with additional ports. The device can have only one Fast Uplink Span group, so all the ports you identify as Fast Uplink Span ports are members of the same group.

To remove a Fast Uplink Span group or to remove individual ports from a group, use "no" in front of the appropriate fast uplink-span command. For example, to remove ports 4/1/3 and 4/1/4 from the Fast Uplink Span group configured above, enter the following commands:

```
device(config)# no fast uplink-span ethernet 1/1/1 to 1/1/4
device(config)# write memory
```

To check the status of ports with Fast Uplink Span enabled.

```
device(config)# show span fast-uplink-span
STP instance owned by VLAN 1
Global STP (IEEE 802.1D) Parameters:
VLAN Root             Root Root   Prio Max He- Ho- Fwd Last    Chg Bridge
 ID   ID              Cost Port   rity Age llo ld  dly Chang   cnt Address
                                  Hex  sec sec sec sec sec
   1 000000c100000001 2    1/3/1  8000 20  2   1   15  65      15  000011111111
Port STP Parameters:
Port   Prio Path  State       Fwd    Design  Designated       Designated
Num    rity Cost              Trans  Cost    Root             Bridge
       Hex
1/1/2  80   0     DISABLED    0      0       0000000000000000 0000000000000000
```

```
1/1/3  80   0     DISABLED    0      0       0000000000000000 0000000000000000
1/1/4  80   4     FORWARDING  1      2       000000c100000001 8000000011111111
1/1/5  80   0     DISABLED    0      0       0000000000000000 0000000000000000
1/1/6  80   0     DISABLED    0      0       0000000000000000 0000000000000000
1/1/7  80   0     DISABLED    0      0       0000000000000000 0000000000000000
1/1/8  80   0     DISABLED    0      0       0000000000000000 0000000000000000
1/1/9  80   0     DISABLED    0      0       0000000000000000 0000000000000000
```

Configuring Fast Uplink Span within a VLAN

You can also configure Fast Uplink Span on the interfaces within a VLAN.

To configure Fast Uplink Span for a VLAN, enter command such as the following.

```
device(config)#vlan 10
device(config-vlan-10)#untag ethernet 1/1/1 to 1/1/3
device(config-vlan-10)#fast uplink-span ethernet 1/1/1 to 1/1/3
```

To check the status of Fast Uplink Span for a specified VLAN.

```
device(config-vlan-2)#show span vlan 2 fast-uplink-span
STP instance owned by VLAN 2
Global STP (IEEE 802.1D) Parameters:
VLAN Root             Root Root   Prio Max He- Ho- Fwd Last    Chg Bridge
 ID   ID              Cost Port   rity Age llo ld  dly Chang   cnt Address
                                  Hex  sec sec sec sec sec
   2 8000000011111111 0    Root   8000 20  2   1   15  29596   0   000011111111
Port STP Parameters:
Port   Prio Path  State       Fwd    Design  Designated       Designated
Num    rity Cost              Trans  Cost    Root             Bridge
       Hex
1/1/1  80   4     LISTENING   0      0       8000000011111111 8000000011111111
```

The VLAN *vlan-id* parameter displays Fast Uplink Span information for the specified VLAN.

802.1W Rapid Spanning Tree (RSTP)

Earlier implementation by RUCKUS of Rapid Spanning Tree Protocol (RSTP), which was 802.1W Draft 3, provided only a subset of the IEEE 802.1W standard; whereas the 802.1W RSTP feature provides the full standard. The implementation of the 802.1W Draft 3 is referred to as RSTP Draft 3.

RSTP Draft3 will continue to be supported on RUCKUS devices for backward compatibility. However, customers who are currently using RSTP Draft 3 should migrate to 802.1W.

The 802.1W feature provides rapid traffic reconvergence for point-to-point links within a few milliseconds (0 - 500 milliseconds), following the failure of a bridge or bridge port. This reconvergence occurs more rapidly than the reconvergence provided by the 802.1D Spanning Tree Protocol (STP)) or by RSTP Draft 3.

> **NOTE**
> This rapid convergence will not occur on ports connected to shared media devices, such as hubs. To take advantage of the rapid convergence provided by 802.1W, make sure to explicitly configure all point-to-point links in a topology.

The convergence provided by the standard 802.1W protocol occurs more rapidly than the convergence provided by previous spanning tree protocols because of the following:

- Classic or legacy 802.1D STP protocol requires a newly selected Root port to go through listening and learning stages before traffic convergence can be achieved. The 802.1D traffic convergence time is calculated using the following formula.

2 x FORWARD_DELAY + BRIDGE_MAX_AGE.

If default values are used in the parameter configuration, convergence can take up to 50 seconds. (In this document STP will be referred to as 802.1D.)

- RSTP Draft 3 works only on bridges that have Alternate ports, which are the precalculated "next best root port". (Alternate ports provide back up paths to the root bridge.) Although convergence occurs from 0 - 500 milliseconds in RSTP Draft 3, the spanning tree topology reverts to the 802.1D convergence if an Alternate port is not found.
- Convergence in 802.1w bridge is not based on any timer values. Rather, it is based on the explicit handshakes between Designated ports and their connected Root ports to achieve convergence in less than 500 milliseconds.

Bridges and bridge port roles

A bridge in an 802.1W rapid spanning tree topology is assigned as the root bridge if it has the highest priority (lowest bridge identifier) in the topology. Other bridges are referred to as non-root bridges.

Unique roles are assigned to ports on the root and non-root bridges. Role assignments are based on the following information contained in the Rapid Spanning Tree Bridge Packet Data Unit (RST BPDU):

- Root bridge ID
- Path cost value
- Transmitting bridge ID
- Designated port ID

The 802.1W algorithm uses this information to determine if the RST BPDU received by a port is superior to the RST BPDU that the port transmits. The two values are compared in the order as given above, starting with the Root bridge ID. The RST BPDU with a lower value is considered superior. The superiority and inferiority of the RST BPDU is used to assign a role to a port.

If the value of the received RST BPDU is the same as that of the transmitted RST BPDU, then the port ID in the RST BPDUs are compared. The RST BPDU with the lower port ID is superior. Port roles are then calculated appropriately.

The port role is included in the BPDU that it transmits. The BPDU transmitted by an 802.1W port is referred to as an RST BPDU, while it is operating in 802.1W mode.

Ports can have one of the following roles:

- **Root** - Provides the lowest cost path to the root bridge from a specific bridge
- **Designated** - Provides the lowest cost path to the root bridge from a LAN to which it is connected
- **Alternate** - Provides an alternate path to the root bridge when the root port goes down
- **Backup** - Provides a backup to the LAN when the Designated port goes down
- **Disabled** - Has no role in the topology

Assignment of port roles

At system start-up, all 802.1W-enabled bridge ports assume a Designated role. Once start-up is complete, the 802.1W algorithm calculates the superiority or inferiority of the RST BPDU that is received and transmitted on a port.

On a root bridge, each port is assigned a Designated port role, except for ports on the same bridge that are physically connected together. In these type of ports, the port that receives the superior RST BPDU becomes the Backup port , while the other port becomes the Designated port .

On non-root bridges, ports are assigned as follows:

- The port that receives the RST BPDU with the lowest path cost from the root bridge becomes the Root port .
- If two ports on the same bridge are physically connected, the port that receives the superior RST BPDU becomes the Backup port , while the other port becomes the Designated port .

- If a non-root bridge already has a Root port, then the port that receives an RST BPDU that is superior to those it can transmit becomes the Alternate port .
- If the RST BPDU that a port receives is inferior to the RST BPDUs it transmits, then the port becomes a Designated port .
- If the port is down or if 802.1W is disabled on the port, that port is given the role of Disabled port . Disabled ports have no role in the topology. However, if 802.1W is enabled on a port with a link down and the link of that port comes up, then that port assumes one of the following port roles: Root, Designated, Alternate, or Backup.

The following example (Figure 48) explains role assignments in a simple RSTP topology.

NOTE
All examples in this document assume that all ports in the illustrated topologies are point-to-point links and are homogeneous (they have the same path cost value) unless otherwise specified.

The topology in the following figure contains four bridges. Switch 1 is the root bridge since it has the lowest bridge priority. Switch 2 through Switch 4 are non-root bridges.

FIGURE 48 Simple 802.1W topology

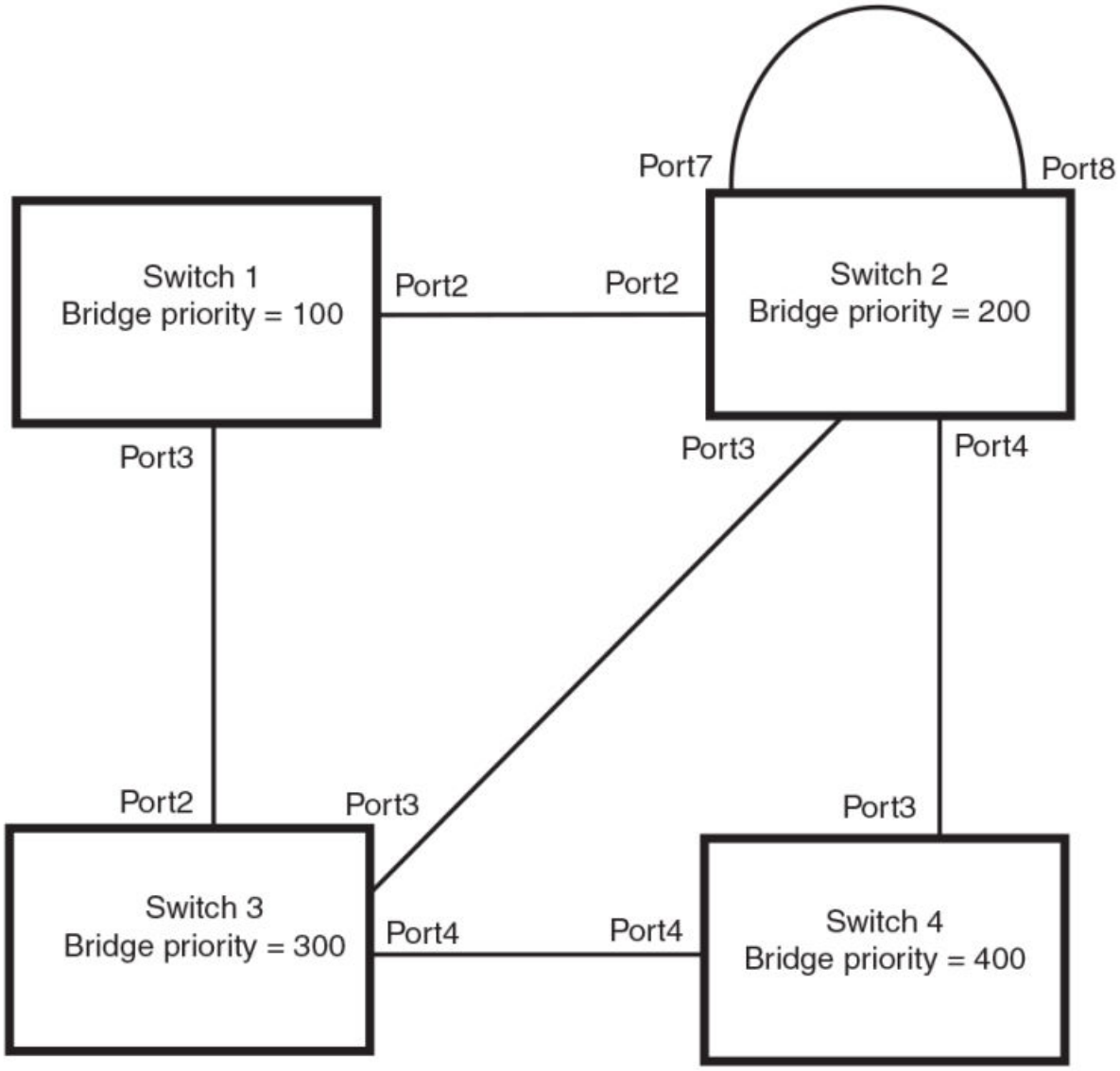

NOTE
Port numbers are simplified.

Assignment of ports on Switch 1

All ports on Switch 1, the root bridge, are assigned Designated port roles.

Assignment of ports on Switch 2

Port2 on Switch 2 directly connects to the root bridge; therefore, Port2 is the Root port.

The bridge priority value on Switch 2 is superior to that of Switch 3 and Switch 4; therefore, the ports on Switch 2 that connect to Switch 3 and Switch 4 are given the Designated port role.

Furthermore, Port7 and Port8 on Switch 2 are physically connected. The RST BPDUs transmitted by Port7 are superior to those Port8 transmits. Therefore, Port8 is the Backup port and Port7 is the Designated port.

Assignment of ports on Switch 3

Port2 on Switch 3 directly connects to the Designated port on the root bridge; therefore, it assumes the Root port role.

The root path cost of the RST BPDUs received on Port4/Switch 3 is inferior to the RST BPDUs transmitted by the port; therefore, Port4/Switch 3 becomes the Designated port.

Similarly Switch 3 has a bridge priority value inferior to Switch 2. Port3 on Switch 3 connects to Port 3 on Switch 2. This port will be given the Alternate port role, since a Root port is already established on this bridge.

Assignment of ports on Switch 4

Switch 4 is not directly connected to the root bridge. It has two ports with superior incoming RST BPDUs from two separate LANs: Port3 and Port4. The RST BPDUs received on Port3 are superior to the RST BPDUs received on port 4; therefore, Port3 becomes the Root port and Port4 becomes the Alternate port.

Edge ports and edge port roles

The RUCKUS implementation of 802.1W allows ports that are configured as Edge ports to be present in an 802.1W topology. (Figure 49). Edge ports are ports of a bridge that connect to workstations or computers. Edge ports do not register any incoming BPDU activities.

Edge ports assume Designated port roles. Port flapping does not cause any topology change events on Edge ports since 802.1W does not consider Edge ports in the spanning tree calculations.

FIGURE 49 Topology with edge ports

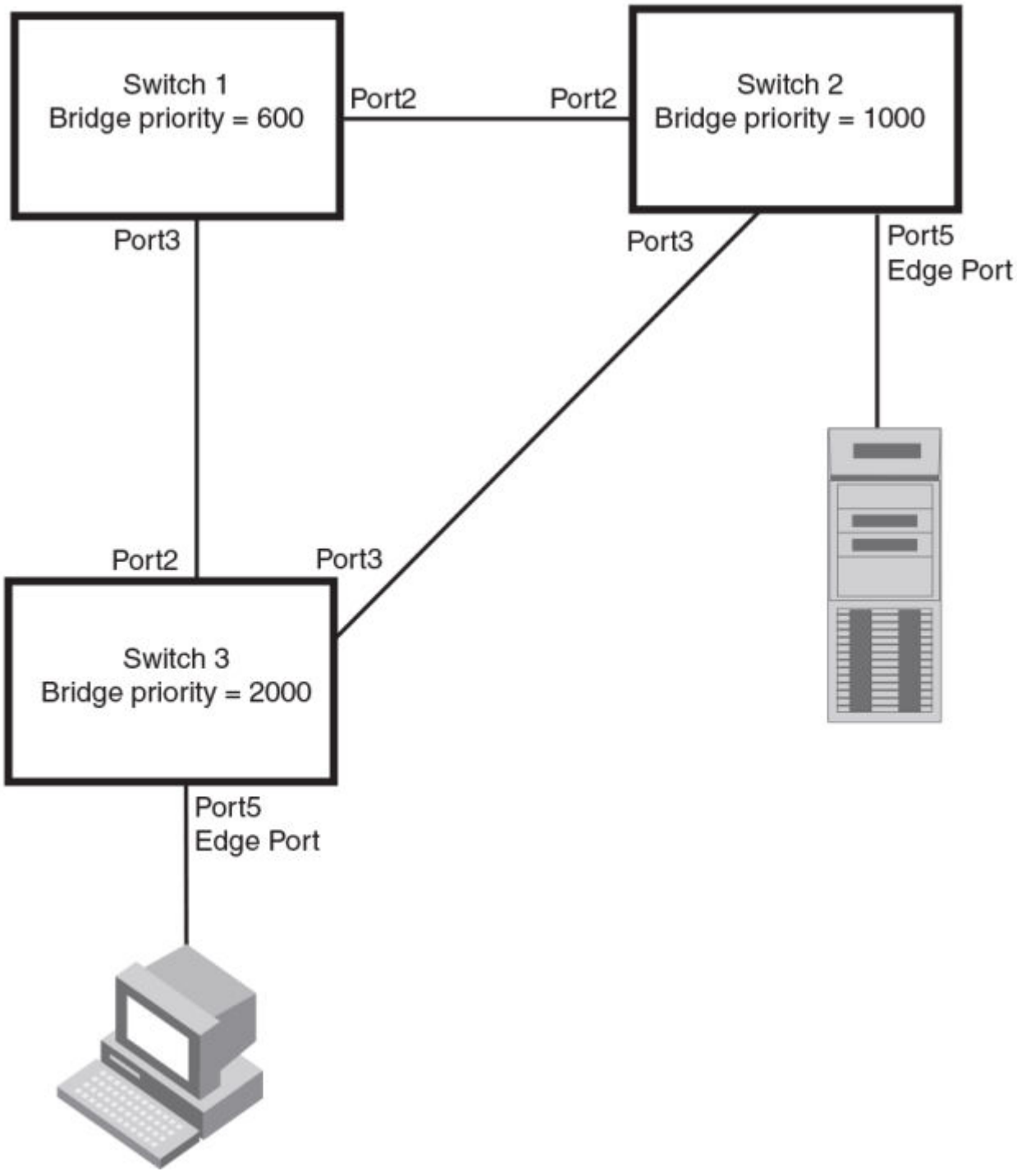

NOTE
Port numbers are simplified.

However, if any incoming RST BPDU is received from a previously configured Edge port, 802.1W automatically makes the port as a non-edge port. This is extremely important to ensure a loop free Layer 2 operation since a non-edge port is part of the active RSTP topology.

The 802.1W protocol can auto-detect an Edge port and a non-edge port. An administrator can also configure a port to be an Edge port using the CLI. It is recommended that Edge ports are configured explicitly to take advantage of the Edge port feature, instead of allowing the protocol to auto-detect them.

Point-to-point ports

To take advantage of the 802.1W features, ports on an 802.1W topology should be explicitly configured as point-to-point links using the CLI. Shared media should not be configured as point-to-point links.

> **NOTE**
> Configuring shared media or non-point-to-point links as point-to-point links could lead to Layer 2 loops.

The topology in the following figure is an example of shared media that should not be configured as point-to-point links. In this figure, a port on a bridge communicates or is connected to at least two ports.

FIGURE 50 Example of shared media

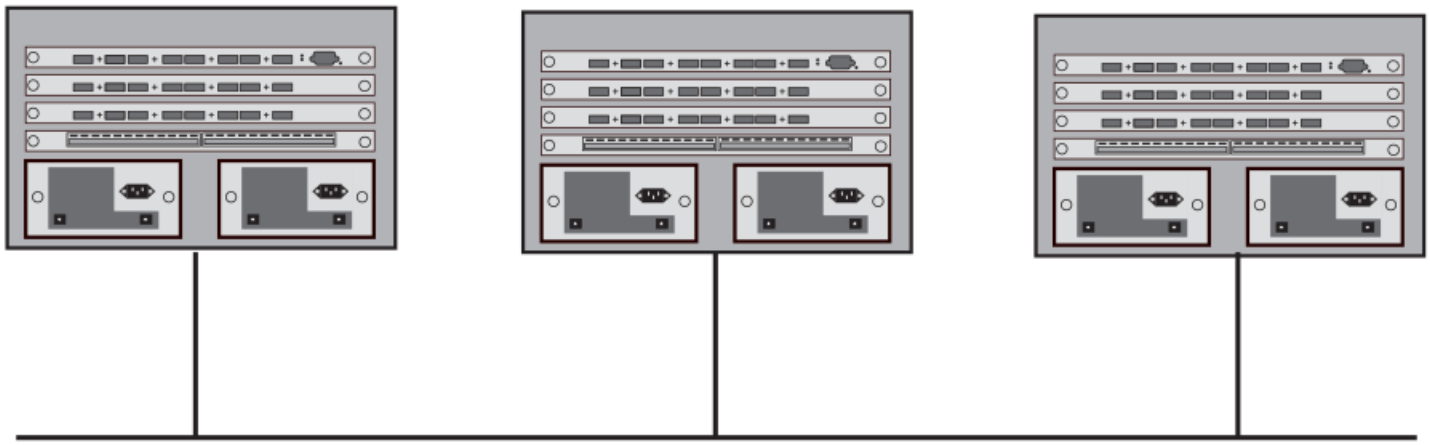

Bridge port states

Ports roles can have one of the following states:

- Forwarding - 802.1W is allowing the port to send and receive all packets.
- Discarding - 802.1W has blocked data traffic on this port to prevent a loop. The device or VLAN can reach the root bridge using another port, whose state is forwarding. When a port is in this state, the port does not transmit or receive data frames, but the port does continue to receive RST BPDUs. This state corresponds to the listening and blocking states of 802.1D.
- Learning - 802.1W is allowing MAC entries to be added to the filtering database but does not permit forwarding of data frames. The device can learn the MAC addresses of frames that the port receives during this state and make corresponding entries in the MAC table.
- Disabled - The port is not participating in 802.1W. This can occur when the port is disconnected or 802.1W is administratively disabled on the port.

A port on a non-root bridge with the role of Root port is always in a forwarding state. If another port on that bridge assumes the Root port role, then the old Root port moves into a discarding state as it assumes another port role.

A port on a non-root bridge with a Designated role starts in the discarding state. When that port becomes elected to the Root port role, 802.1W quickly places it into a forwarding state. However, if the Designated port is an Edge port, then the port starts and stays in a forwarding state and it cannot be elected as a Root port.

A port with an Alternate or Backup role is always in a discarding state. If the port role changes to Designated, then the port changes into a forwarding state.

If a port on one bridge has a Designated role and that port is connected to a port on another bridge that has an Alternate or Backup role, the port with a Designated role cannot be given a Root port role until two instances of the forward delay timer expires on that port.

Edge port and non-edge port states

As soon as a port is configured as an Edge port using the CLI, it goes into a forwarding state instantly (in less than 100 msec).

When the link to a port comes up and 802.1W detects that the port is an Edge port, that port instantly goes into a forwarding state.

If 802.1W detects that port as a non-edge port, the port state is changed as determined by the result of processing the received RST BPDU. The port state change occurs within four seconds of link up or after two hello timer expires on the port.

Changes to port roles and states

To achieve convergence in a topology, a port role and state changes as it receives and transmits new RST BPDUs. Changes in a port role and state constitute a topology change. Besides the superiority and inferiority of the RST BPDU, bridge-wide and per-port state machines are used to determine a port role as well as a port state. Port state machines also determine when port role and state changes occur.

Port Role Selection state machines

The bridge uses the Port Role Selection state machine to determine if port role changes are required on the bridge. This state machine performs a computation when one of the following events occur:

- New information is received on any port on the bridge
- The timer expires for the current information on a port on the bridge

Each port uses the following state machines:

- Port Information - This state machine keeps track of spanning-tree information currently used by the port. It records the origin of the information and ages out any information that was derived from an incoming BPDU.
- Port Role Transition - This state machine keeps track of the current port role and transitions the port to the appropriate role when required. It moves the Root port and the Designated port into forwarding states and moves the Alternate and Backup ports into discarding states.
- Port Transmit - This state machine is responsible for BPDU transmission. It checks to ensure only the maximum number of BPDUs per hello interval are sent every second. Based on what mode it is operating in, it sends out either legacy BPDUs or RST BPDUs. In this document legacy BPDUs are also referred to as STP BPDUs.
- Port Protocol Migration - This state machine deals with compatibility with 802.1D bridges. When a legacy BPDU is detected on a port, this state machine configures the port to transmit and receive legacy BPDUs and operate in the legacy mode.
- Topology Change - This state machine detects, generates, and propagates topology change notifications. It acknowledges Topology Change Notice (TCN) messages when operating in 802.1D mode. It also flushes the MAC table when a topology change event takes place.
- Port State Transition - This state machine transitions the port to a discarding, learning, or forwarding state and performs any necessary processing associated with the state changes.
- Port Timers - This state machine is responsible for triggering any of the state machines described above, based on expiration of specific port timers.

In contrast to the 802.1D standard, the 802.1W standard does not have any bridge specific timers. All timers in the CLI are applied on a per-port basis, even though they are configured under bridge parameters.

802.1W state machines attempt to quickly place the ports into either a forwarding or discarding state. Root ports are quickly placed in forwarding state when both of the following events occur:

- It is assigned to be the Root port.
- It receives an RST BPDU with a proposal flag from a Designated port. The proposal flag is sent by ports with a Designated role when they are ready to move into a forwarding state.

When a the role of Root port is given to another port, the old Root port is instructed to reroot. The old Root port goes into a discarding state and negotiates with its peer port for a new role and a new state. A peer port is the port on the other bridge to which the port is connected. For example, in Figure 51, Port1 of Switch 200 is the peer port of Port2 of Switch 100.

A port with a Designated role is quickly placed into a forwarding state if one of the following occurs:

- The Designated port receives an RST BPDU that contains an agreement flag from a Root port
- The Designated port is an Edge port

However, a Designated port that is attached to an Alternate port or a Backup port must wait until the forward delay timer expires twice on that port while it is still in a Designated role, before it can proceed to the forwarding state.

Backup ports are quickly placed into discarding states.

Alternate ports are quickly placed into discarding states.

A port operating in 802.1W mode may enter a learning state to allow MAC entries to be added to the filtering database; however, this state is transient and lasts only a few milliseconds, if the port is operating in 802.1W mode and if the port meets the conditions for rapid transition.

Handshake mechanisms

To rapidly transition a Designated or Root port into a forwarding state, the Port Role Transition state machine uses handshake mechanisms to ensure loop free operations. It uses one type of handshake if no Root port has been assigned on a bridge, and another type if a Root port has already been assigned.

Handshake when no root port is elected

If a Root port has not been assigned on a bridge, 802.1W uses the Proposing -> Proposed -> Sync -> Synced -> Agreed handshake:

- Proposing - The Designated port on the root bridge sends an RST BPDU packet to its peer port that contains a proposal flag. The proposal flag is a signal that indicates that the Designated port is ready to put itself in a forwarding state (Figure 51). The Designated port continues to send this flag in its RST BPDU until it is placed in a forwarding state (Figure 54) or is forced to operate in 802.1D mode. (Refer to Compatibility of 802.1W with 802.1D on page 197).
- Proposed - When a port receives an RST BPDU with a proposal flag from the Designated port on its point-to-point link, it asserts the Proposed signal and one of the following occurs (Figure 51):
  - If the RST BPDU that the port receives is superior to what it can transmit, the port assumes the role of a Root port. (Refer to the section on Bridges and bridge port roles on page 166.)
  - If the RST BPDU that the port receives is inferior to what it can transmit, then the port is given the role of Designated port.

  NOTE
  Proposed will never be asserted if the port is connected on a shared media link.

In the following figure, Port3/Switch 200 is elected as the Root port.

FIGURE 51 Proposing and proposed stage

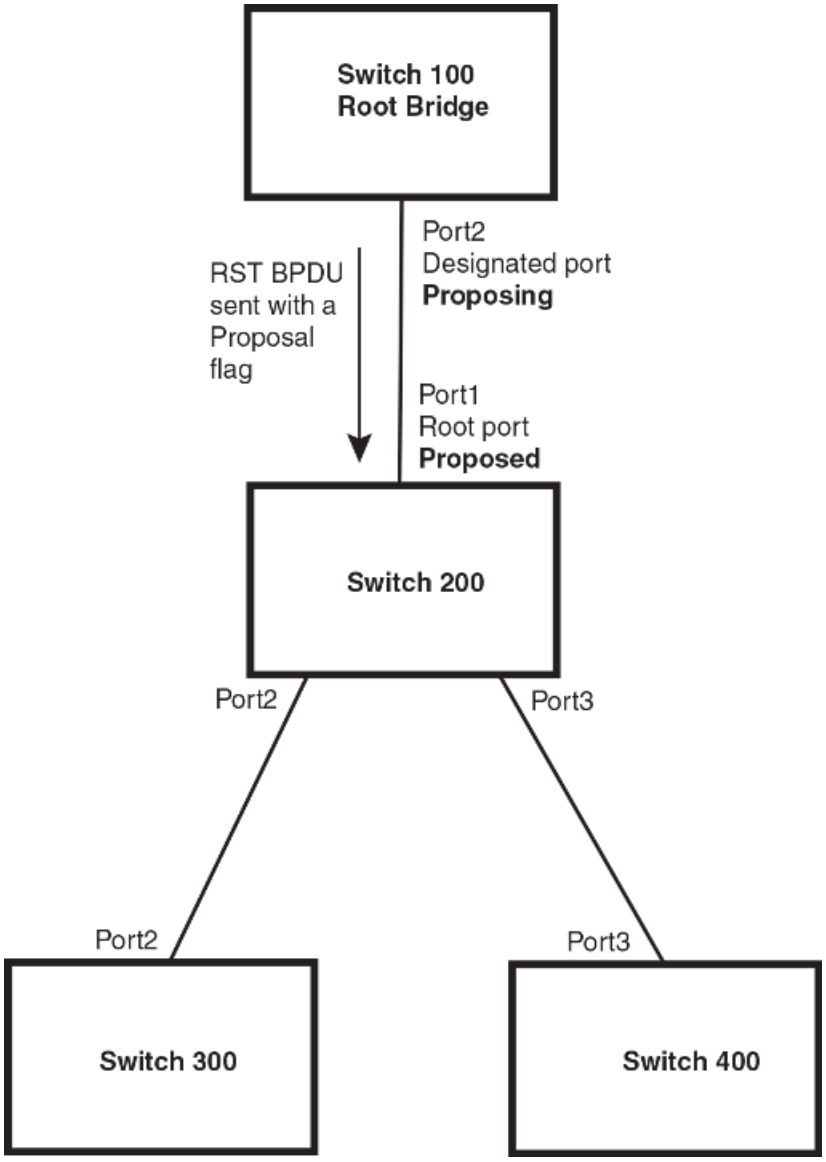

NOTE
Port numbers are simplified.

- Sync - Once the Root port is elected, it sets a sync signal on all the ports on the bridge. The signal tells the ports to synchronize their roles and states (Figure 52). Ports that are non-edge ports with a role of Designated port change into a discarding state. These ports have to negotiate with their peer ports to establish their new roles and states.

FIGURE 52 Sync stage

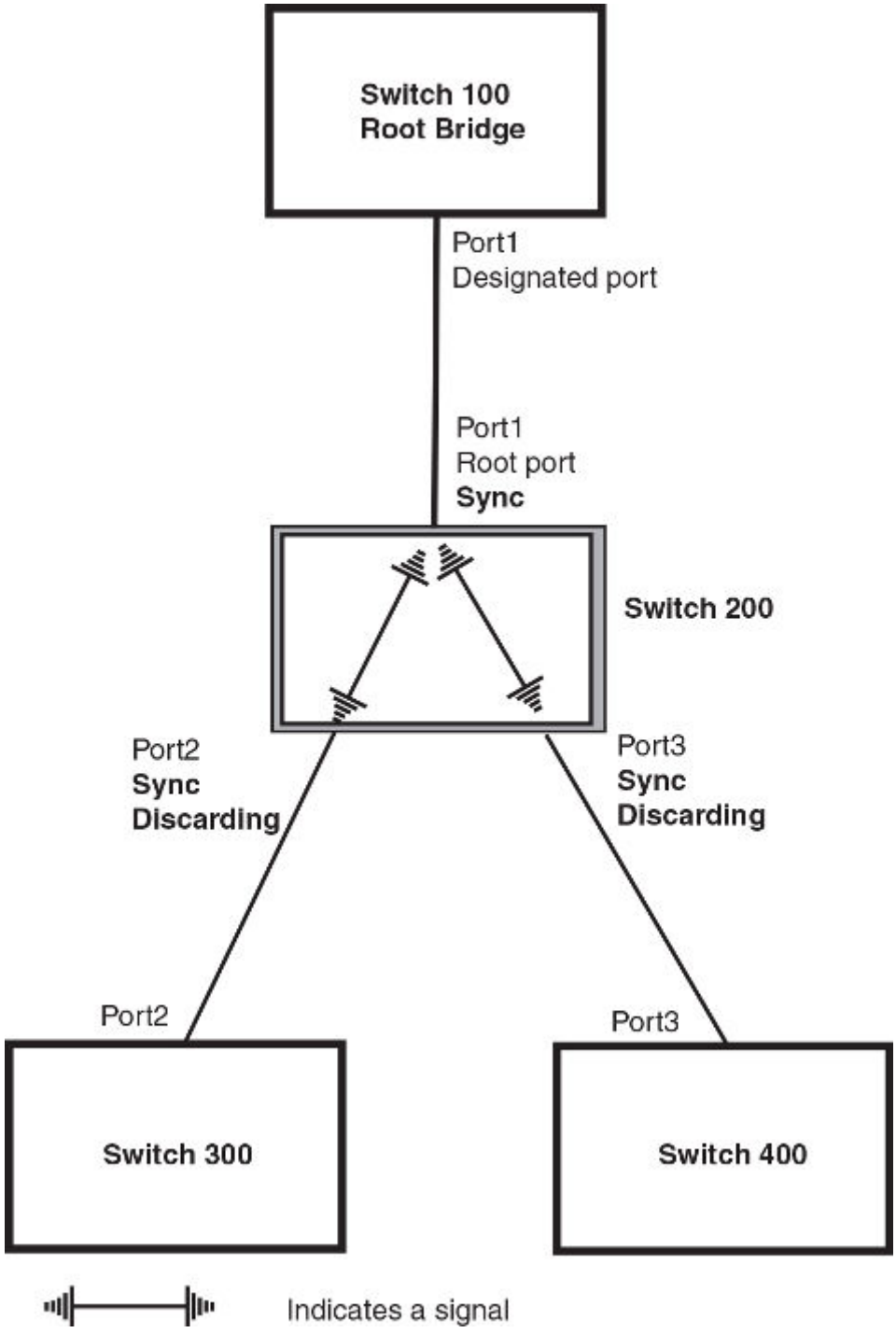

NOTE
Port numbers are simplified.

- Synced - Once the Designated port changes into a discarding state, it asserts a synced signal. Immediately, Alternate ports and Backup ports are synced. The Root port monitors the synced signals from all the bridge ports. Once all bridge ports asserts a synced signal, the Root port asserts its own synced signal as shown in the following figure.

FIGURE 53 Synced stage

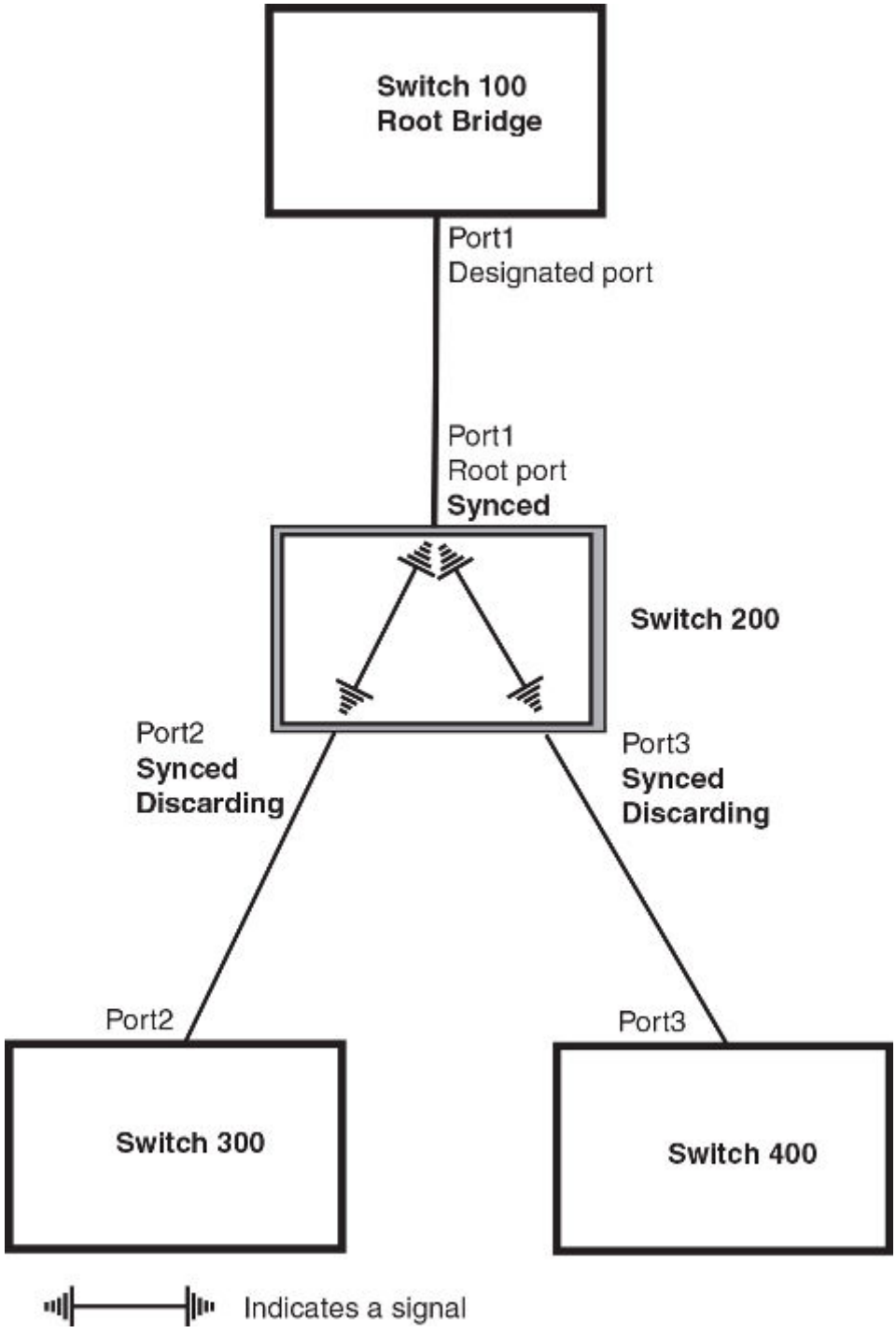

NOTE
Port numbers are simplified.

- Agreed - The Root port sends back an RST BPDU containing an agreed flag to its peer Designated port and moves into the forwarding state. When the peer Designated port receives the RST BPDU, it rapidly transitions into a forwarding state.

FIGURE 54 Agree stage

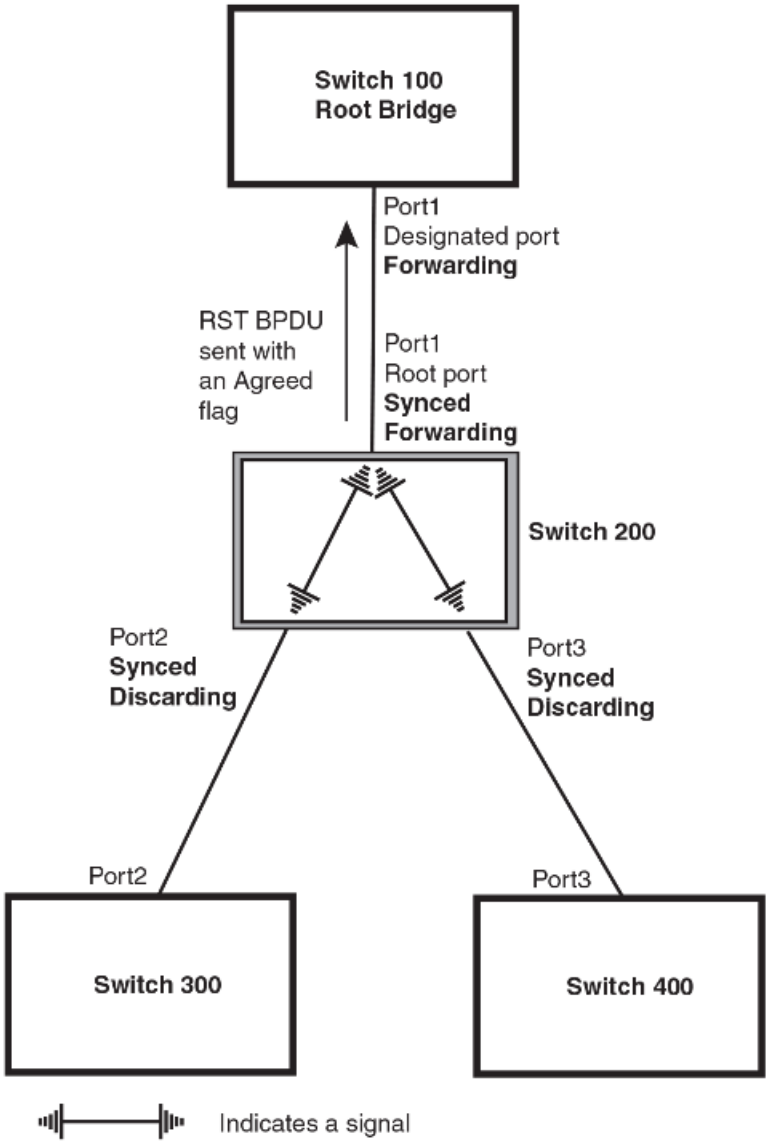

NOTE
Port numbers are simplified.

At this point, the handshake mechanism is complete between Switch 100, the root bridge, and Switch 200.

Switch 200 updates the information on the Switch 200 Designated ports (Port2 and Port3) and identifies the new root bridge. The Designated ports send RST BPDUs, containing proposal flags, to their downstream bridges, without waiting for the hello timers to expire on them. This process starts the handshake with the downstream bridges.

For example, Port2/Switch 200 sends an RST BPDU to Port2/Switch 300 that contains a proposal flag. Port2/Switch 300 asserts a proposed signal. Ports in Switch 300 then set sync signals on the ports to synchronize and negotiate their roles and states. Then the ports assert a synced signal and when the Root port in Switch 300 asserts its synced signal, it sends an RST BPDU to Switch 200 with an agreed flag.

This handshake is repeated between Switch 200 and Switch 400 until all Designated and Root ports are in forwarding states.

Handshake when a root port has been elected

If a non-root bridge already has a Root port, 802.1W uses a different type of handshake. For example, in the following figure, a new root bridge is added to the topology.

FIGURE 55 Addition of a new root bridge

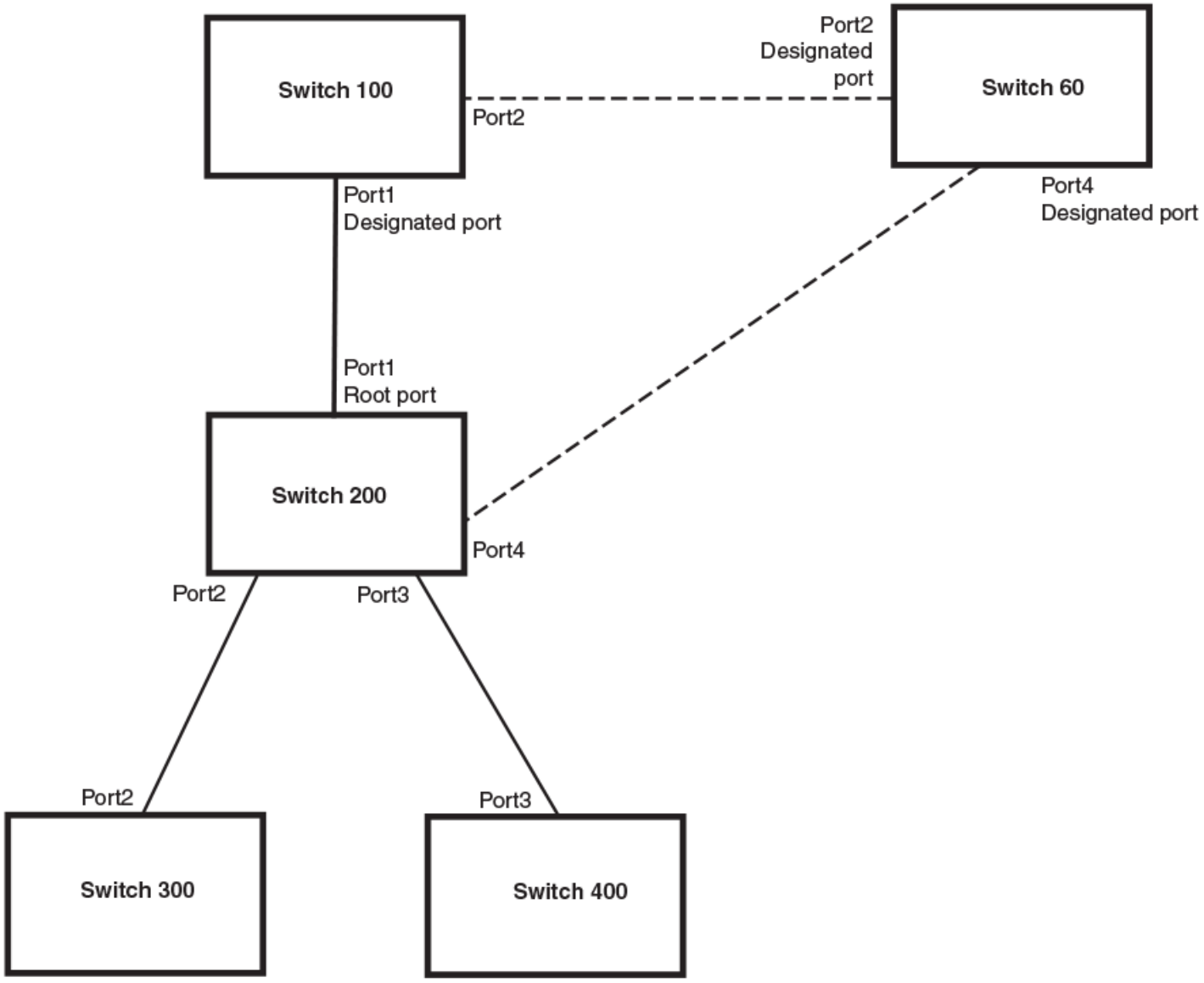

NOTE

Port numbers are simplified.

The handshake that occurs between Switch 60 and Switch 100 follows the one described in the previous section (Handshake when no root port is elected). The former root bridge becomes a non-root bridge and establishes a Root port (Figure 56).

However, since Switch 200 already had a Root port in a forwarding state, 802.1W uses the Proposing -> Proposed -> Sync and Reroot -> Sync and Rerooted -> Rerooted and Synced -> Agreed handshake:

- Proposing and Proposed - The Designated port on the new root bridge (Port4/Switch 60) sends an RST BPDU that contains a proposing signal to Port4/Switch 200 to inform the port that it is ready to put itself in a forwarding state (Figure 56). 802.1W algorithm determines that the RST BPDU that Port4/Switch 200 received is superior to what it can generate, so Port4/Switch 200 assumes a Root port role.

FIGURE 56 New root bridge sending a proposal flag

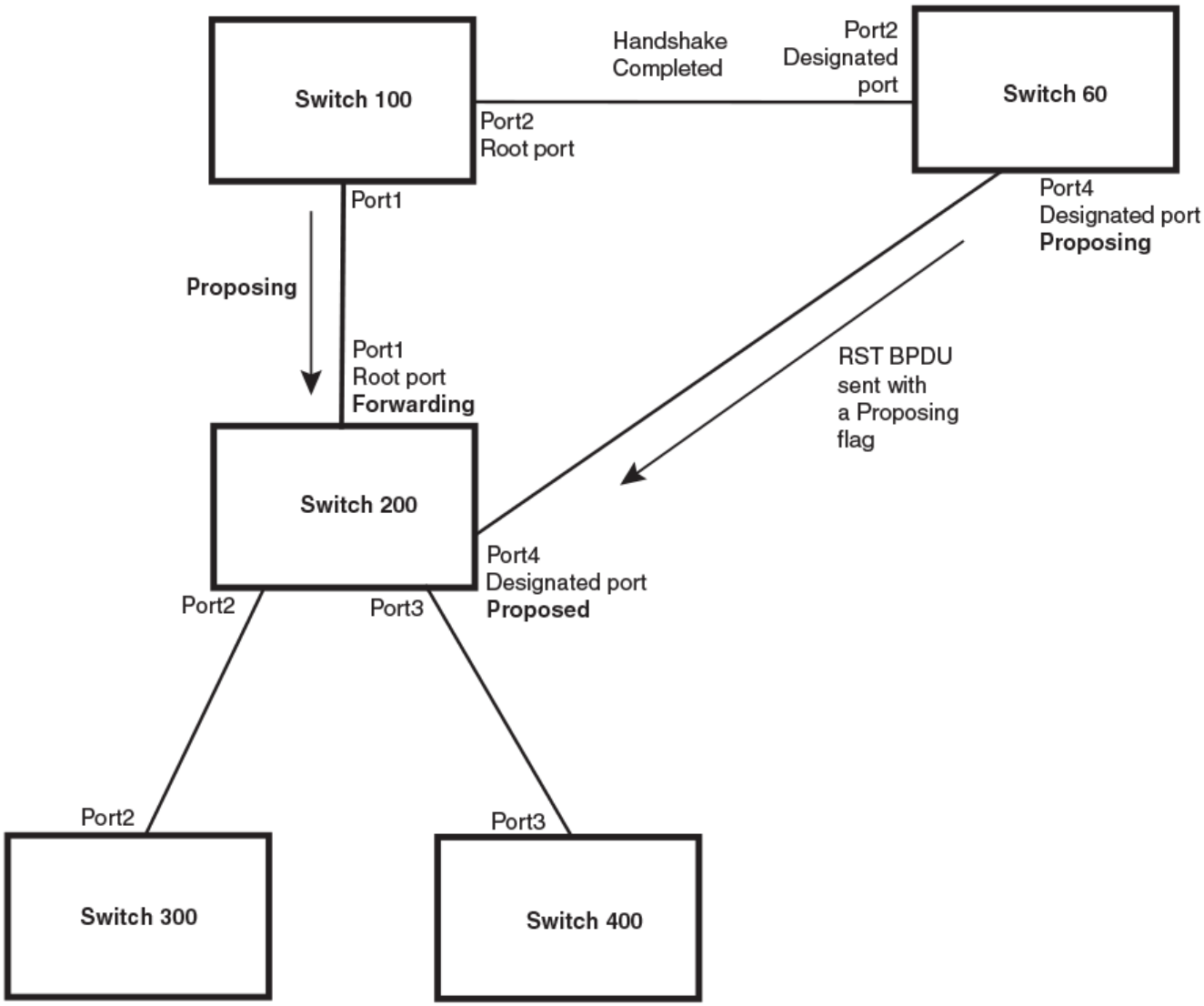

NOTE
Port numbers are simplified.

- Sync and Reroot - The Root port then asserts a sync and a reroot signal on all the ports on the bridge. The signal tells the ports that a new Root port has been assigned and they are to renegotiate their new roles and states. The other ports on the bridge assert their sync and reroot signals. Information about the old Root port is discarded from all ports. Designated ports change into discarding states as shown in the following figure.

FIGURE 57 Sync and reroot

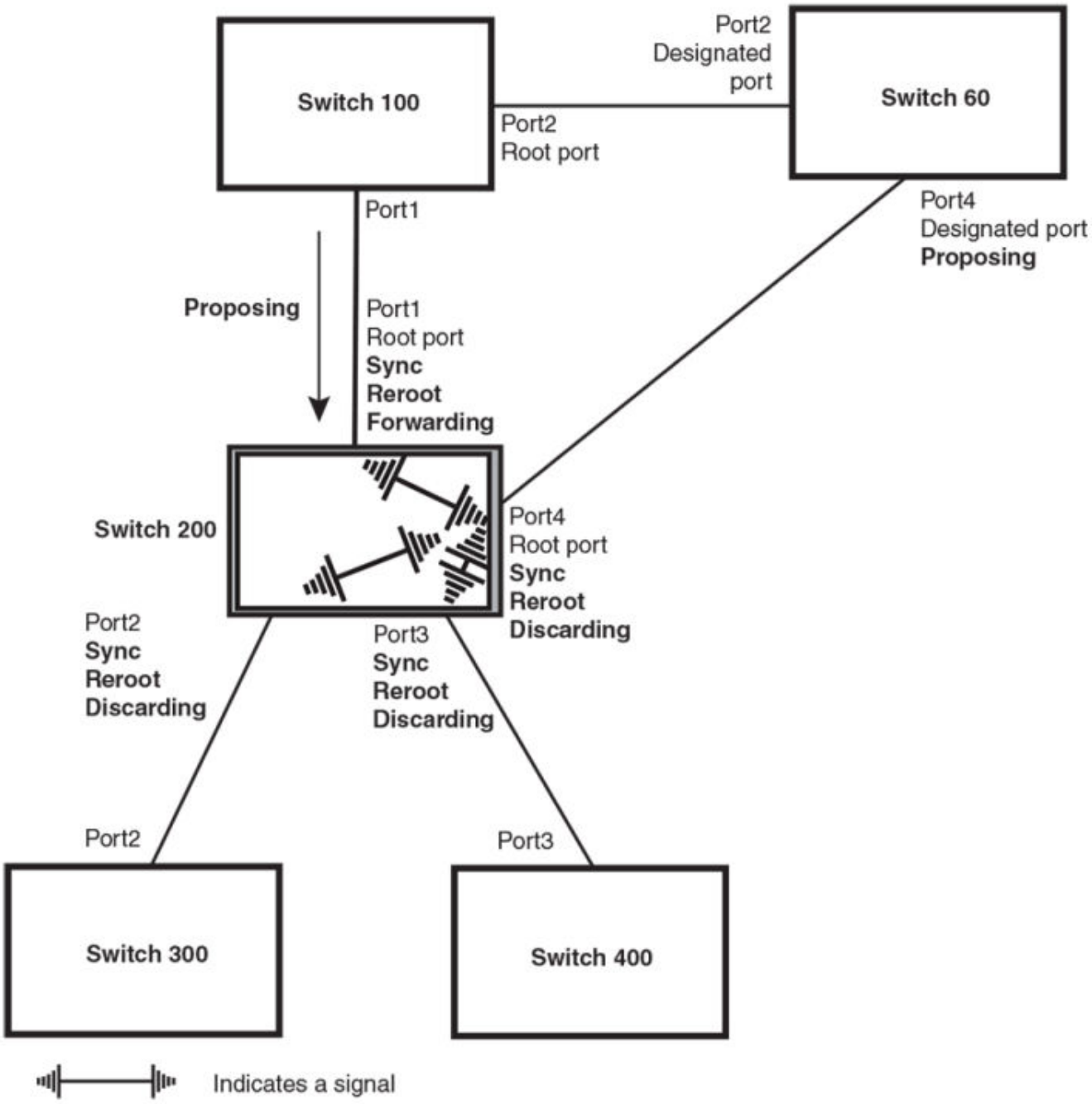

NOTE
Port numbers are simplified.

- Sync and Rerooted - When the ports on Switch 200 have completed the reroot phase, they assert their rerooted signals and continue to assert their sync signals as they continue in their discarding states. They also continue to negotiate their roles and states with their peer ports as shown in the following figure.

FIGURE 58 Sync and rerooted

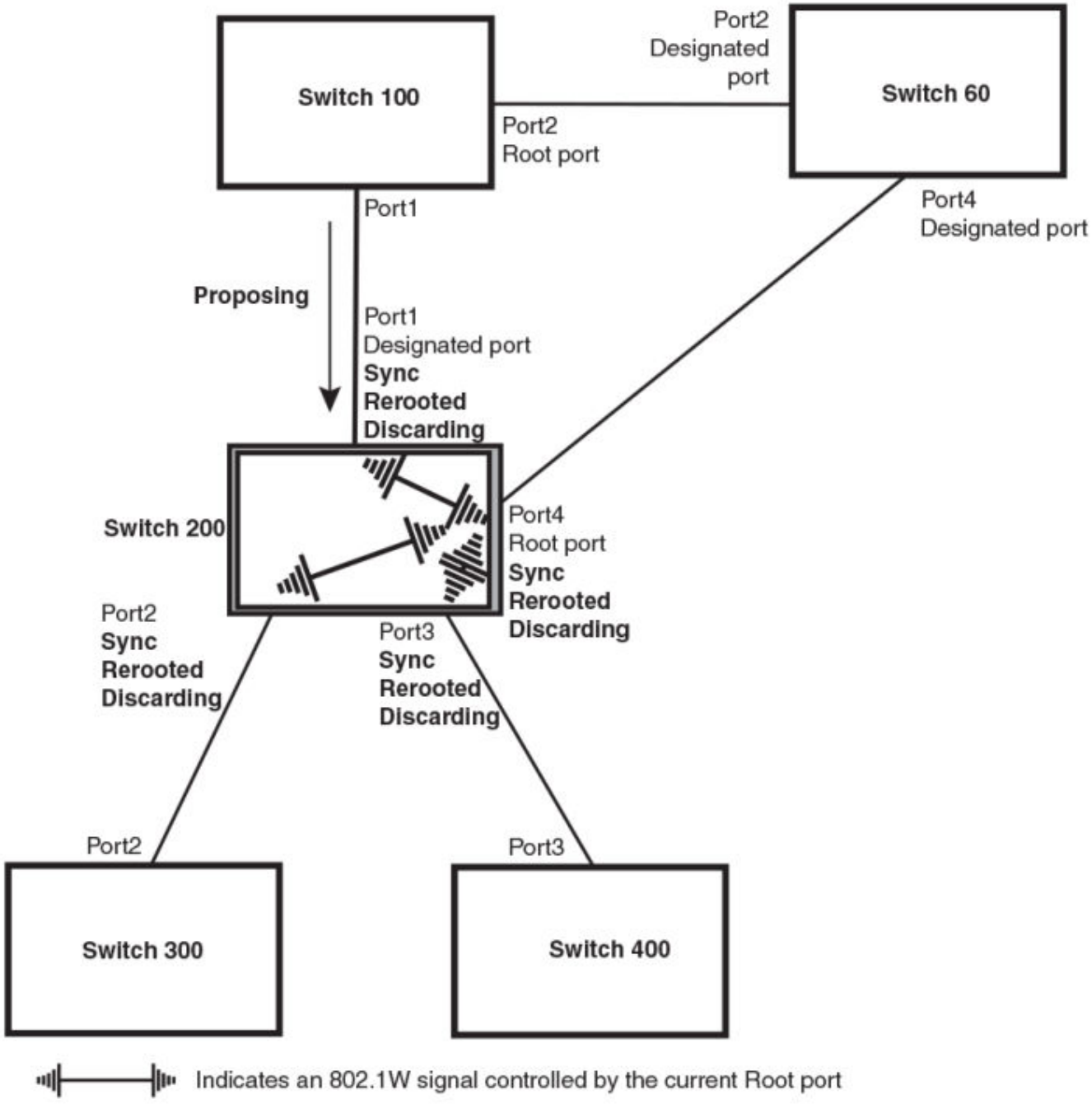

NOTE
Port numbers are simplified.

- Synced and Agree - When all the ports on the bridge assert their synced signals, the new Root port asserts its own synced signal and sends an RST BPDU to Port4/Switch 60 that contains an agreed flag as shown in the following figure. The Root port also moves into a forwarding state.

FIGURE 59 Rerooted, synced, and agreed

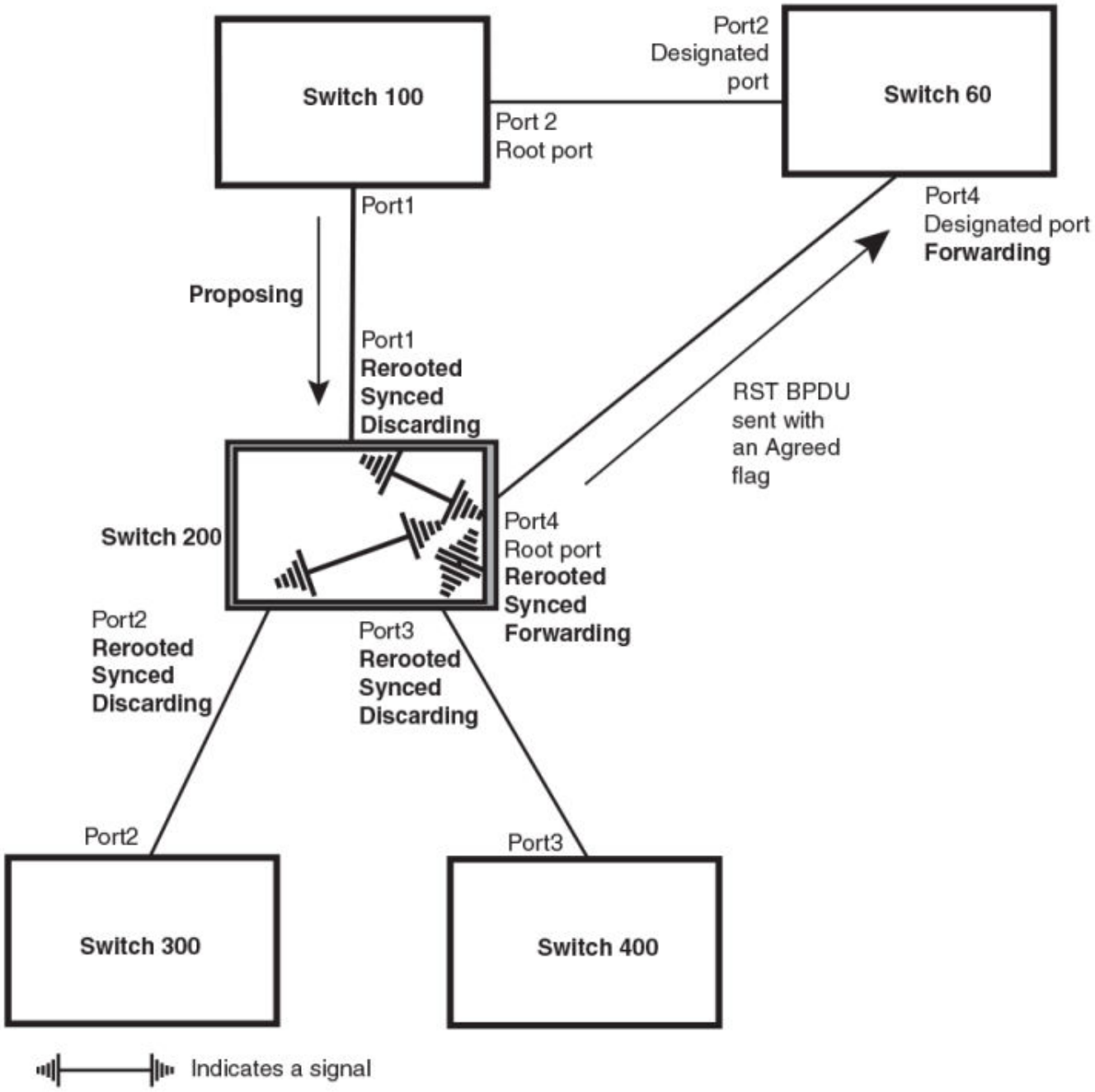

NOTE
Port numbers are simplified.

The old Root port on Switch 200 becomes an Alternate Port as shown in the following figure. Other ports on that bridge are elected to appropriate roles.

The Designated port on Switch 60 goes into a forwarding state once it receives the RST BPDU with the agreed flag.

FIGURE 60 Handshake completed after election of new root port

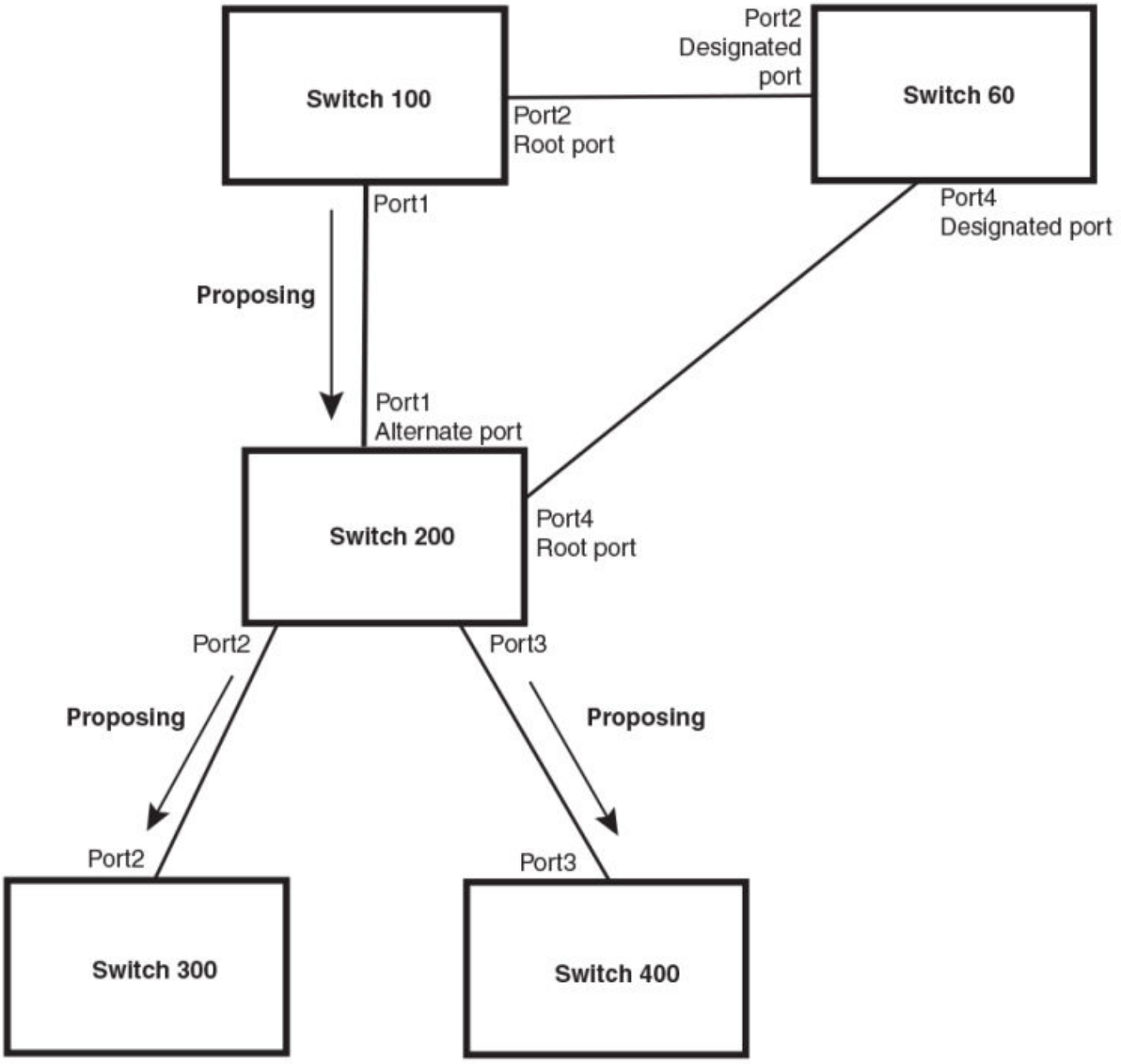

NOTE
Port numbers are simplified.

Recall that Switch 200 sent the agreed flag to Port4/Switch 60 and not to Port1/Switch 100 (the port that connects Switch 100 to Switch 200). Therefore, Port1/Switch 100 does not go into forwarding state instantly. It waits until two instances of the forward delay timer expires on the port before it goes into forwarding state.

At this point the handshake between the Switch 60 and Switch 200 is complete.

The remaining bridges (Switch 300 and Switch 400) may have to go through the reroot handshake if a new Root port needs to be assigned.

802.1W convergence in a simple topology

The examples in this section illustrate how 802.1W convergence occurs in a simple Layer 2 topology at start-up.

NOTE
The remaining examples assume that the appropriate handshake mechanisms occur as port roles and states change.

Convergence at start up

In the following figure, two bridges Switch 2 and Switch 3 are powered up. There are point-to-point connections between Port3/Switch 2 and Port3/Switch 3.

FIGURE 61 Convergence between two bridges

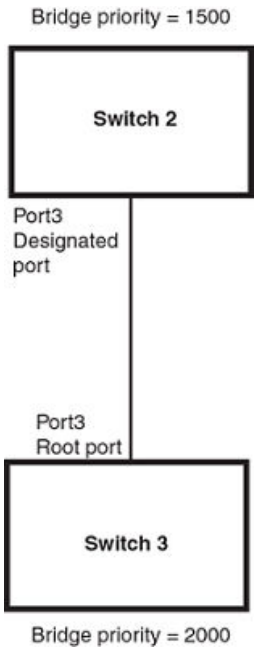

NOTE
Port numbers are simplified

At power up, all ports on Switch 2 and Switch 3 assume Designated port roles and are at discarding states before they receive any RST BPDU.

Port3/Switch 2, with a Designated role, transmits an RST BPDU with a proposal flag to Port3/Switch 3. A ports with a Designated role sends the proposal flag in its RST BPDU when they are ready to move to a forwarding state.

Port3/Switch 3, which starts with a role of Designated port, receives the RST BPDU and finds that it is superior to what it can transmit; therefore, Port3/Switch 3 assumes a new port role, that of a Root port. Port3/Switch 3 transmits an RST BPDU with an agreed flag back to Switch 2 and immediately goes into a forwarding state.

Port3/Switch 2 receives the RST BPDU from Port3/Switch 3 and immediately goes into a forwarding state.

Now 802.1W has fully converged between the two bridges, with Port3/Switch 3 as an operational root port in forwarding state and Port3/Switch 2 as an operational Designated port in forwarding state.

Next, Switch 1 is powered up. See the following figure.

FIGURE 62 Simple Layer 2 topology

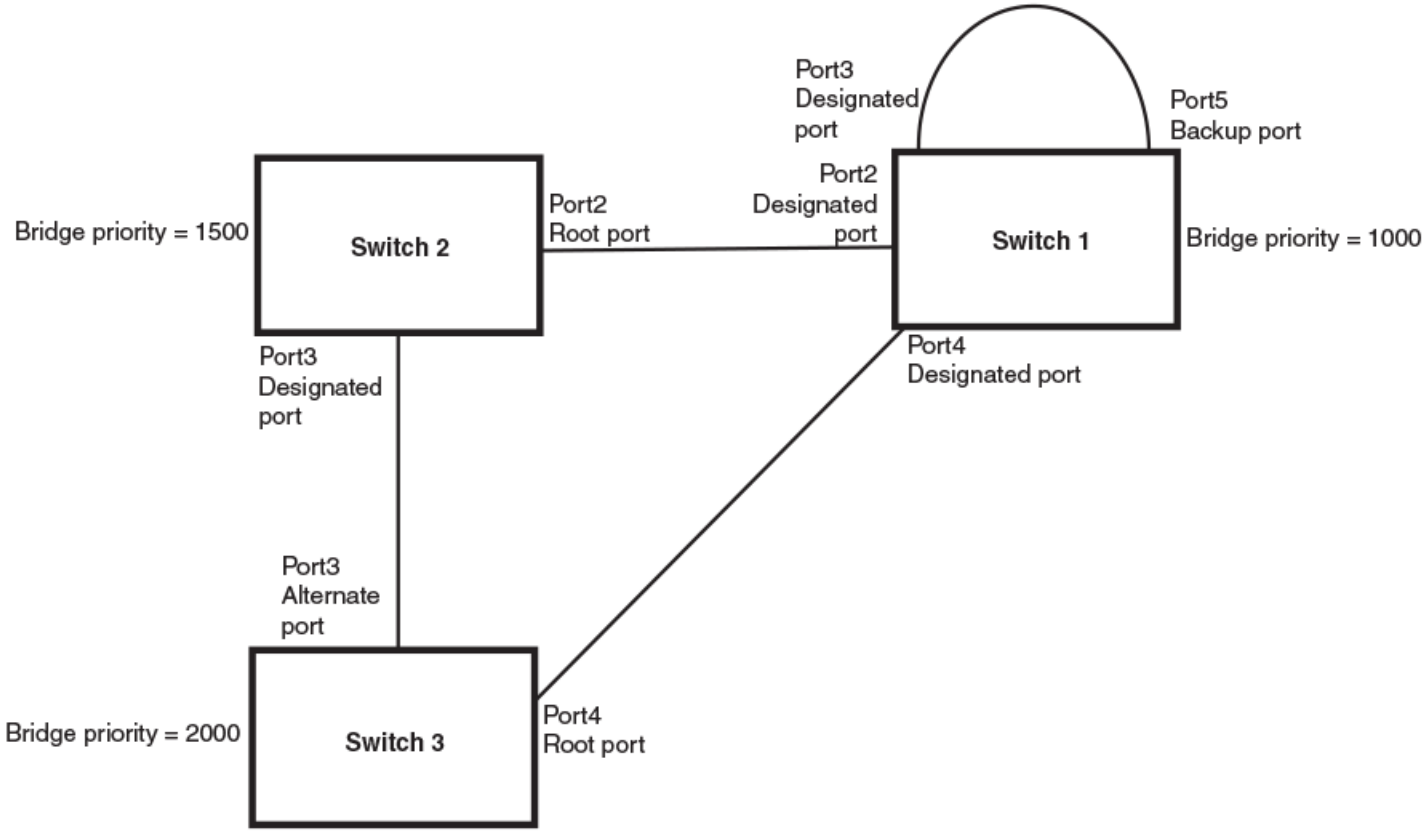

NOTE
Port numbers are simplified

The point-to-point connections between the three bridges are as follows:

- Port2/Switch 1 and Port2/Switch 2
- Port4/Switch 1 and Port4/Switch 3
- Port3/Switch 2 and Port3/Switch 3

Ports 3 and 5 on Switch 1 are physically connected.

At start up, the ports on Switch 1 assume Designated port roles, which are in discarding state. The ports begin sending RST BPDUs with proposal flags. The flags indicate the ID of the bridge that the ports belong to, and the bridge that the ports understand to be the root bridge. The switch that eventually becomes the downstream neighbor is the only switch that sends a BPDU with the agreement bit set.

When Port4/Switch 3 receives these RST BPDUs 802.1W algorithm determines that they are better than the RST BPDUs that were previously received on Port3/Switch 3. Port4/Switch 3 is now selected as Root port. This new assignment signals Port3/Switch 3 to begin entering the discarding state and to assume an Alternate port role. As it goes through the transition, Port3/Switch 3 negotiates a new role and state with its peer port, Port3/Switch 2.

Port4/Switch 3 sends an RST BPDU with an agreed flag to Port4/Switch 1. Both ports go into forwarding states.

Port2/Switch 2 receives an RST BPDU. The 802.1W algorithm evaluates the BPDU and determines that it is superior to any BPDU that any other port on Switch 2 can transmit. Port2/Switch 2 assumes the role of a Root port.

The new Root port then signals all ports on the bridge to start synchronization. Since none of the ports are Edge ports, they all enter the discarding state and assume the role of Designated ports. Port3/Switch 2, which previously had a Designated role with a forwarding state, starts the discarding state. They also negotiate port roles and states with their peer ports. Port3/Switch 2 also sends an RST BPU to Port3/Switch 3 with a proposal flag to request permission go into a forwarding state.

The Port2/Switch 2 bridge also sends an RST BPDU with an agreed flag Port2/Switch 1 that Port2 is the new Root port. Both ports go into forwarding states.

Now, Port3/Switch 3 is currently in a discarding state and is negotiating a port role. It received RST BPDUs from Port3/Switch 2. The 802.1W algorithm determines that the RST BPDUs Port3/Switch 3 received are superior to those it can transmit; however, they are not superior to those that are currently being received by the current Root port (Port4). Therefore, Port3 retains the role of Alternate port.

Ports 3/Switch 1 and Port5/Switch 1 are physically connected. Port5/Switch 1 received RST BPDUs that are superior to those received on Port3/Switch 1; therefore, Port5/Switch 1 is given the Backup port role while Port3 is given the Designated port role. Port3/Switch 1, does not go directly into a forwarding state. It waits until the forward delay time expires twice on that port before it can proceed to the forwarding state.

Once convergence is achieved, the active Layer 2 forwarding path converges as shown in the following figure.

FIGURE 63 Active Layer 2 path

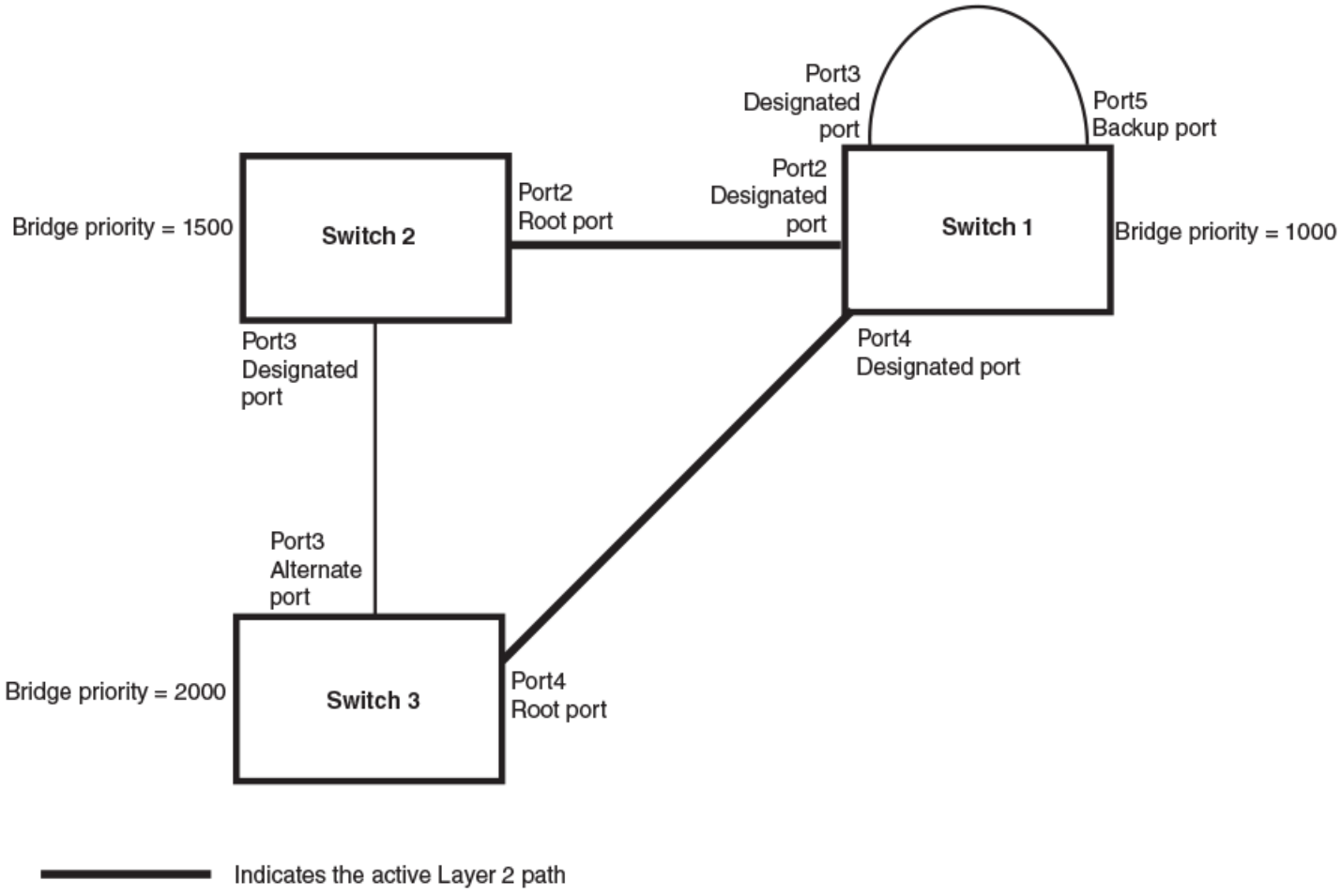

NOTE
Port numbers are simplified

Convergence after a link failure

The following figure illustrates a link failure in the 802.1W topology. In this example, Port2/Switch, which is the port that connects Switch 2 to the root bridge (Switch 1), failed and both Switch 2 and Switch 1 are affected by the topology change.

FIGURE 64 Link failure in the topology

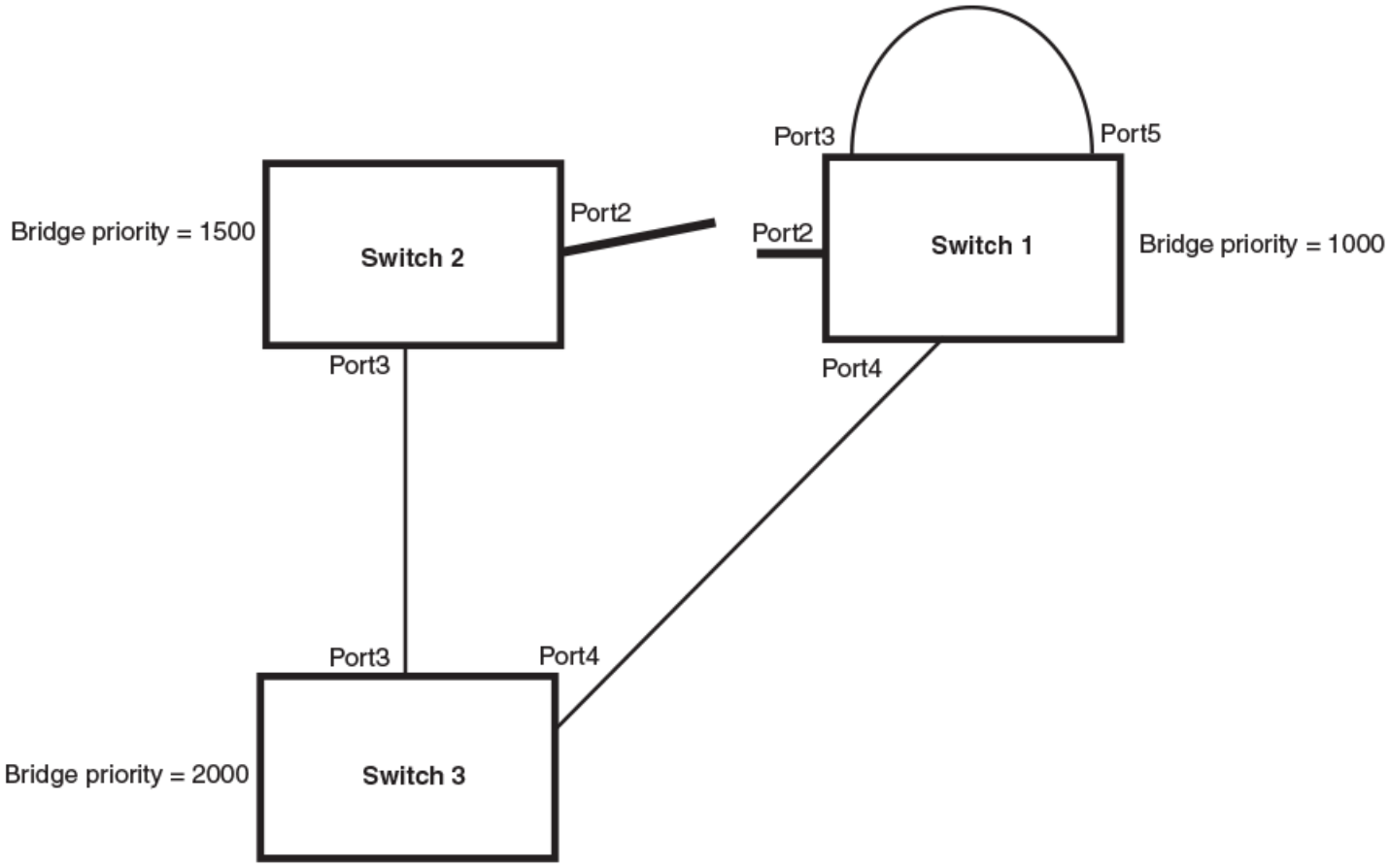

NOTE
Port numbers are simplified.

Switch 1 sets its Port2 into a discarding state.

At the same time, Switch 2 assumes the role of a root bridge since its root port failed and it has no operational Alternate port. Port3/Switch 2, which currently has a Designated port role, sends an RST BPDU to Switch 3. The RST BPDU contains a proposal flag and a bridge ID of Switch 2 as its root bridge ID.

When Port3/Switch 3 receives the RST BPDUs, 802.1W algorithm determines that they are inferior to those that the port can transmit. Therefore, Port3/Switch 3 is given a new role, that of a Designated port. Port3/Switch 3 then sends an RST BPDU with a proposal flag to Switch 2, along with the new role information. However, the root bridge ID transmitted in the RST BPDU is still Switch 1.

When Port3/Switch 2 receives the RST BPDU, 802.1W algorithm determines that it is superior to the RST BPDU that it can transmit; therefore, Port3/Switch 2 receives a new role; that of a Root port. Port3/Switch 2 then sends an RST BPDU with an agreed flag to Port3/Switch 3. Port3/Switch 2 goes into a forwarding state.

When Port3/Switch 3 receives the RST BPDU that Port3/Switch 2 sent, Port3/Switch 3 changes into a forwarding state, which then completes the full convergence of the topology.

Convergence at link restoration

When Port2/Switch 2 is restored, both Switch 2 and Switch 1 recognize the change. Port2/Switch 1 starts assuming the role of a Designated port and sends an RST BPDU containing a proposal flag to Port2/Switch 2.

When Port2/Switch 2 receives the RST BPDUs, 802.1W algorithm determines that the RST BPDUs the port received are better than those received on Port3/Switch 3; therefore, Port2/Switch 2 is given the role of a Root port. All the ports on Switch 2 are informed that a new Root port has been assigned which then signals all the ports to synchronize their roles and states. Port3/Switch 2, which was the previous Root port, enters a discarding state and negotiates with other ports on the bridge to establish its new role and state, until it finally assumes the role of a Designated port.

Next, the following happens:

- Port3/Switch 2, the Designated port, sends an RST BPDU, with a proposal flag to Port3/Switch 3.
- Port2/Switch 2 also sends an RST BPDU with an agreed flag to Port2/Switch 1 and then places itself into a forwarding state.

When Port2/Switch 1 receives the RST BPDU with an agreed flag sent by Port2/Switch 2, it puts that port into a forwarding state. The topology is now fully converged.

When Port3/Switch 3 receives the RST BPDU that Port3/Switch 2 sent, 802.1W algorithm determines that these RST BPDUs are superior to those that Port3/Switch 3 can transmit. Therefore, Port3/Switch 3 is given a new role, that of an Alternate port. Port3/Switch 3 immediately enters a discarding state.

Now Port3/Switch 2 does not go into a forwarding state instantly like the Root port. It waits until the forward delay timer expires twice on that port while it is still in a Designated role, before it can proceed to the forwarding state. The wait, however, does not cause a denial of service, since the essential connectivity in the topology has already been established.

When fully restored, the topology is the same as that shown on Figure 62 on page 187.

Convergence in a complex 802.1W topology

The following figure illustrates a complex 802.1W topology.

FIGURE 65 Complex 802.1W topology

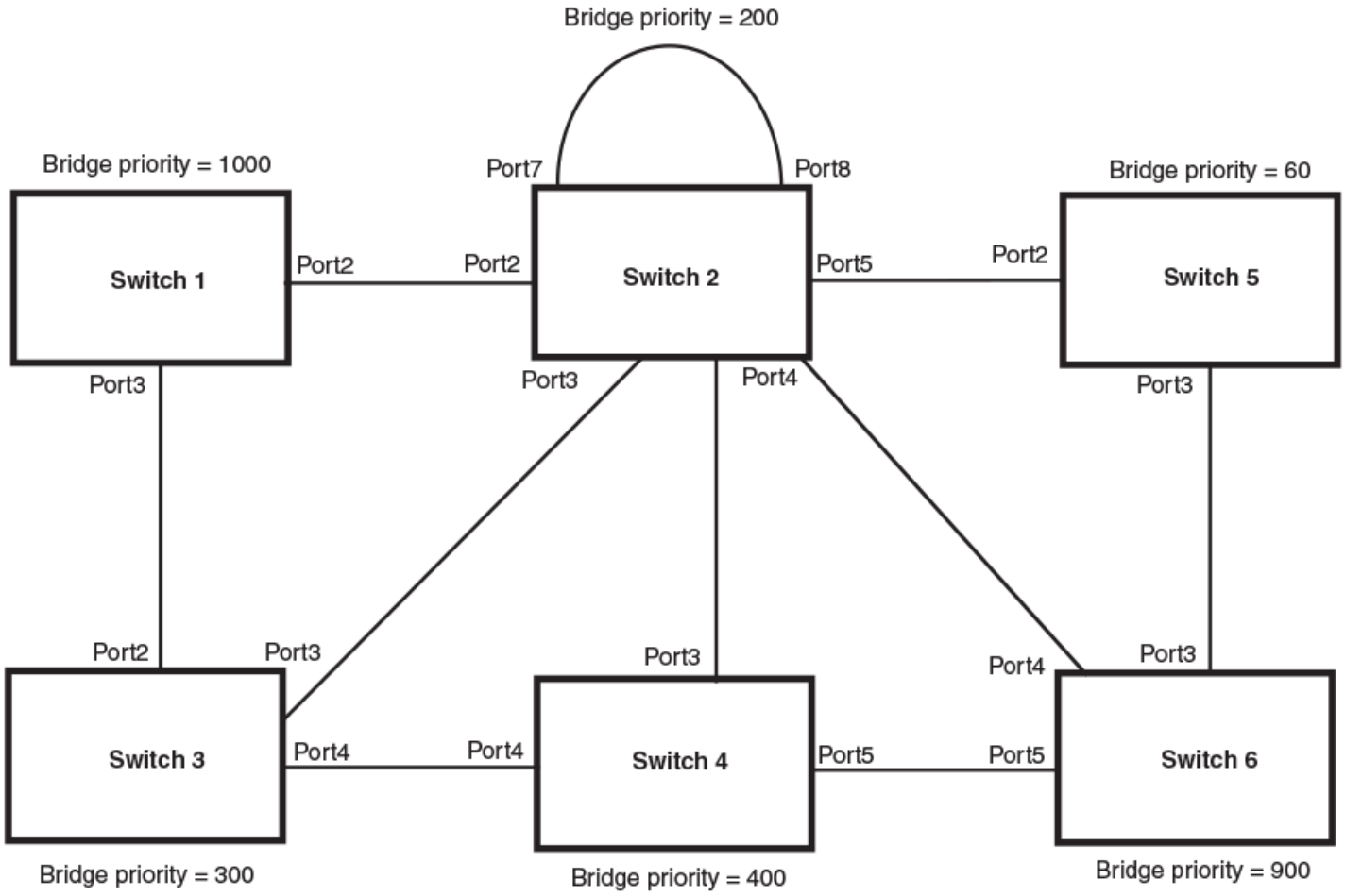

NOTE
Port numbers are simplified.

In the above figure, Switch 5 is selected as the root bridge since it is the bridge with the highest priority. Lines in the figure show the point-to-point connection to the bridges in the topology.

Switch 5 sends an RST BPDU that contains a proposal flag to Port5/Switch 2. When handshakes are completed in Switch 5, Port5/Switch 2 is selected as the Root port on Switch 2. All other ports on Switch 2 are given Designated port role with discarding states.

Port5/Switch 2 then sends an RST BPDU with an agreed flag to Switch 5 to confirm that it is the new Root port and the port enters a forwarding state. Port7 and Port8 are informed of the identity of the new Root port. 802.1W algorithm selects Port7 as the Designated port while Port8 becomes the Backup port.

Port3/Switch 5 sends an RST BPDU to Port3/Switch 6 with a proposal flag. When Port3/Switch 5 receives the RST BPDU, handshake mechanisms select Port3 as the Root port of Switch 6. All other ports are given a Designated port role with discarding states. Port3/Switch 6 then sends an RST BPDU with an agreed flag to Port3/Switch 5 to confirm that it is the Root port. The Root port then goes into a forwarding state.

Now, Port4/Switch 6 receives RST BPDUs that are superior to what it can transmit; therefore, it is given the Alternate port role. The port remains in discarding state.

Port5/Switch 6 receives RST BPDUs that are inferior to what it can transmit. The port is then given a Designated port role.

Next Switch 2 sends RST BPDUs with a proposal flag to Port3/Switch 4. Port3 becomes the Root port for the bridge; all other ports are given a Designated port role with discarding states. Port3/Switch 4 sends an RST BPDU with an agreed flag to Switch 2 to confirm that it is the new Root port. The port then goes into a forwarding state.

Now Port4/Switch 4 receives an RST BPDU that is superior to what it can transmit. The port is then given an Alternate port role, and remains in discarding state.

Likewise, Port5/Switch 4 receives an RST BPDU that is superior to what it can transmit. The port is also given an Alternate port role, and remains in discarding state.

Port2/Switch 2 transmits an RST BPDU with a proposal flag to Port2/Switch 1. Port2/Switch 1 becomes the Root port. All other ports on Switch 1 are given Designated port roles with discarding states.

Port2/Switch 1 sends an RST BPDU with an agreed flag to Port2/Switch 2 and Port2/Switch 1 goes into a forwarding state.

Port3/Switch 1 receives an RST BPDUs that is inferior to what it can transmit; therefore, the port retains its Designated port role and goes into forwarding state only after the forward delay timer expires twice on that port while it is still in a Designated role.

Port3/Switch 2 sends an RST BPDU to Port3/Switch 3 that contains a proposal flag. Port3/Switch 3 becomes the Root port, while all other ports on Switch 3 are given Designated port roles and go into discarding states. Port3/Switch 3 sends an RST BPDU with an agreed flag to Port3/Switch 2 and Port3/Switch 3 goes into a forwarding state.

Now, Port2/Switch 3 receives an RST BPDUs that is superior to what it can transmit so that port is given an Alternate port state.

Port4/Switch 3 receives an RST BPDU that is inferior to what it can transmit; therefore, the port retains its Designated port role.

Ports on all the bridges in the topology with Designated port roles that received RST BPDUs with agreed flags go into forwarding states instantly. However, Designated ports that did not receive RST BPDUs with agreed flags must wait until the forward delay timer expires twice on those port. Only then will these port move into forwarding states.

The entire 802.1W topology converges in less than 300 msec and the essential connectivity is established between the designated ports and their connected root ports.

After convergence is complete, the following figure shows the active Layer 2 path of the topology in Figure 65.

FIGURE 66 Active Layer 2 path in complex topology

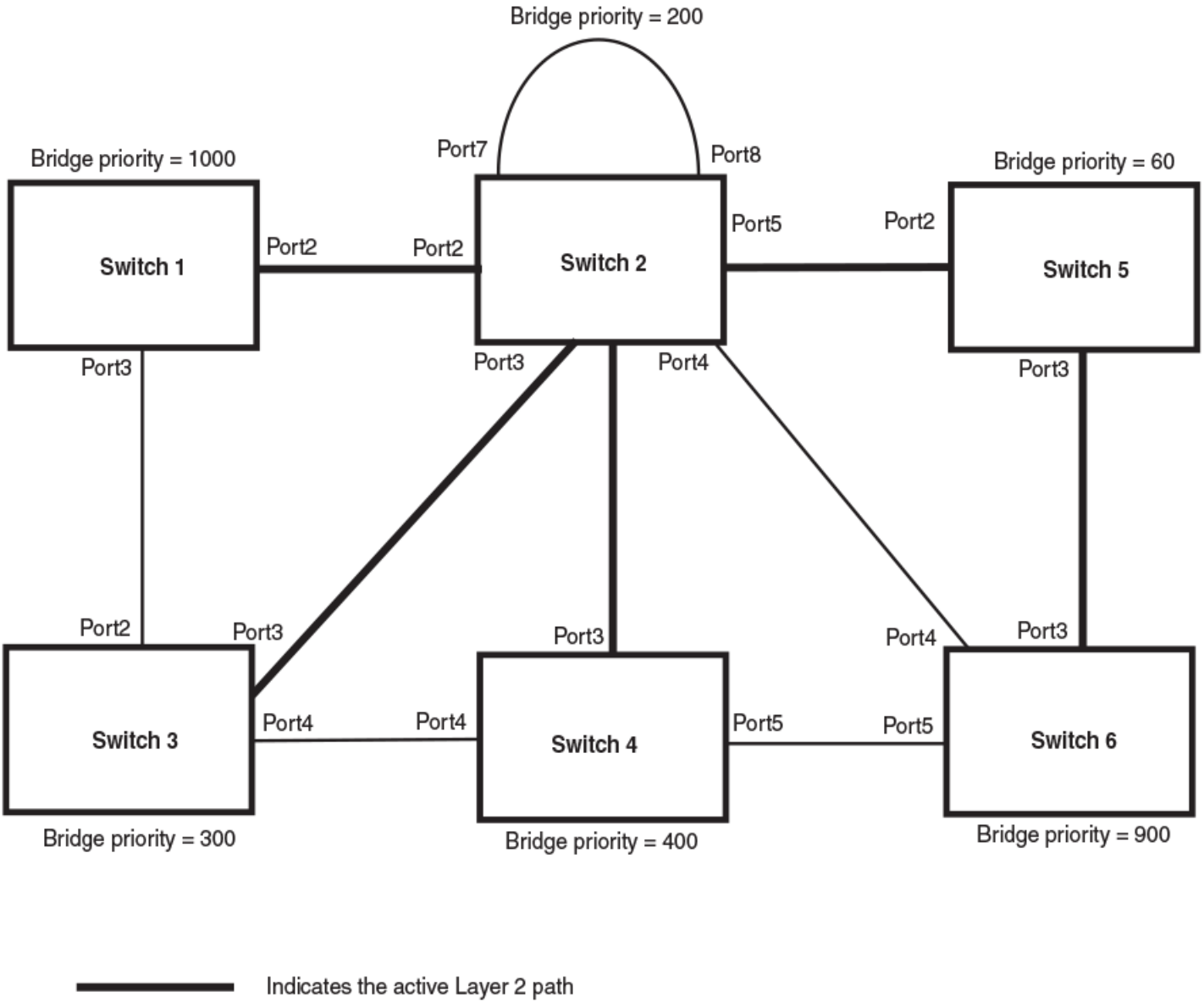

NOTE
Port numbers are simplified.

Propagation of topology change

The Topology Change state machine generates and propagates the topology change notification messages on each port. When a Root port or a Designated port goes into a forwarding state, the Topology Change state machine on those ports send a topology change notice (TCN) to all the bridges in the topology to propagate the topology change.

NOTE
Edge ports, Alternate ports, or Backup ports do not need to propagate a topology change.

The TCN is sent in the RST BPDU that a port sends. Ports on other bridges in the topology then acknowledge the topology change once they receive the RST BPDU, and send the TCN to other bridges until all the bridges are informed of the topology change.

For example, Port3/Switch 2 in the following figure, fails. Port4/Switch 3 becomes the new Root port. Port4/Switch 3 sends an RST BPDU with a TCN to Port4/Switch 4. To propagate the topology change, Port4/Switch 4 then starts a TCN timer on itself, on the bridge Root port, and on other ports on that bridge with a Designated role. Then Port3/Switch 4 sends RST BPDU with the TCN to Port4/Switch 2. (Note the new active Layer 2 path in the following figure.)

FIGURE 67 Beginning of topology change notice

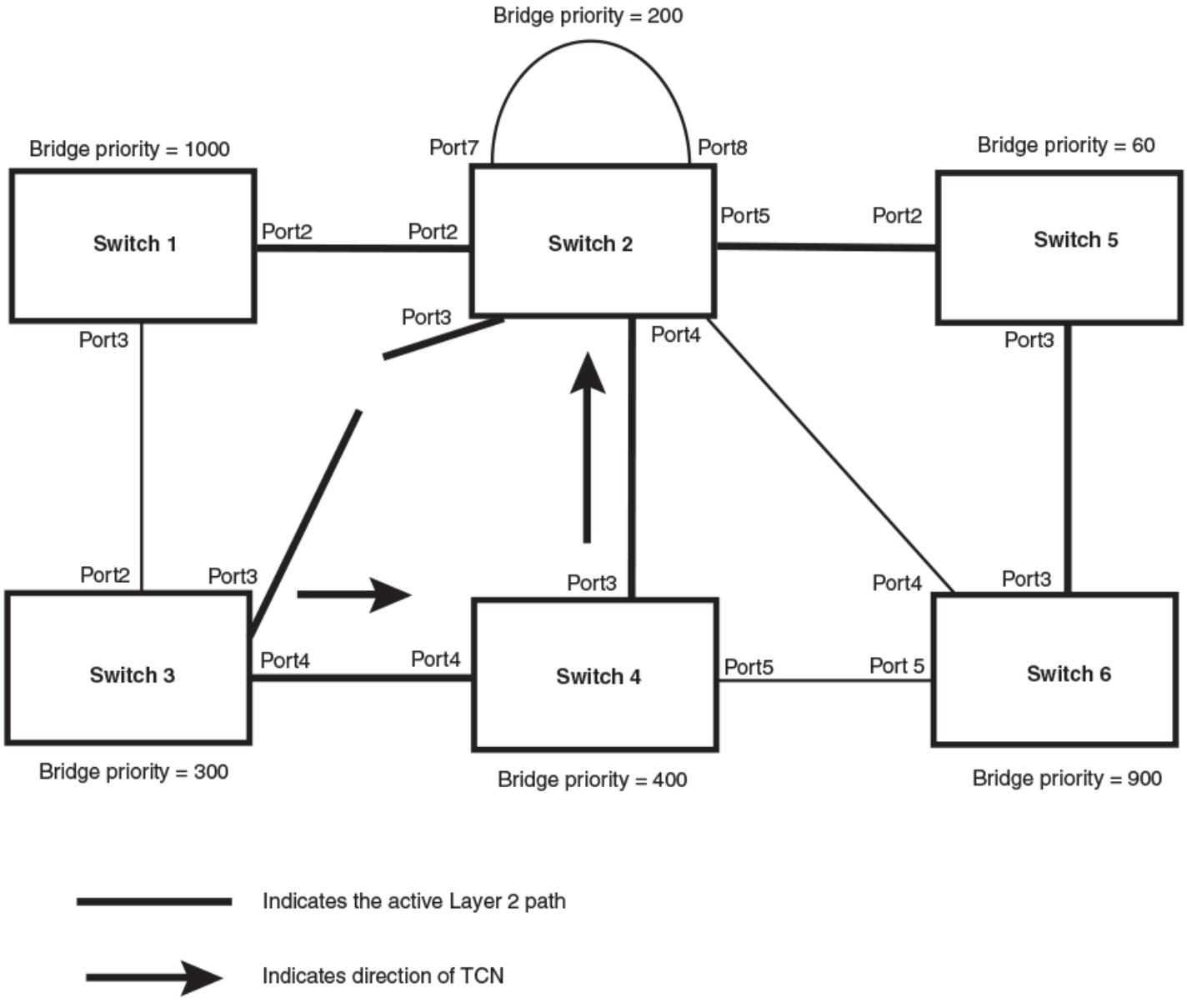

NOTE
Port numbers are simplified.

Switch 2 then starts the TCN timer on the Designated ports and sends RST BPDUs that contain the TCN as follows (Figure 68):

- Port5/Switch 2 sends the TCN to Port2/Switch 5
- Port4/Switch 2 sends the TCN to Port4/Switch 6
- Port2/Switch 2 sends the TCN to Port2/Switch 1

FIGURE 68 Sending TCN to bridges connected to Switch 2

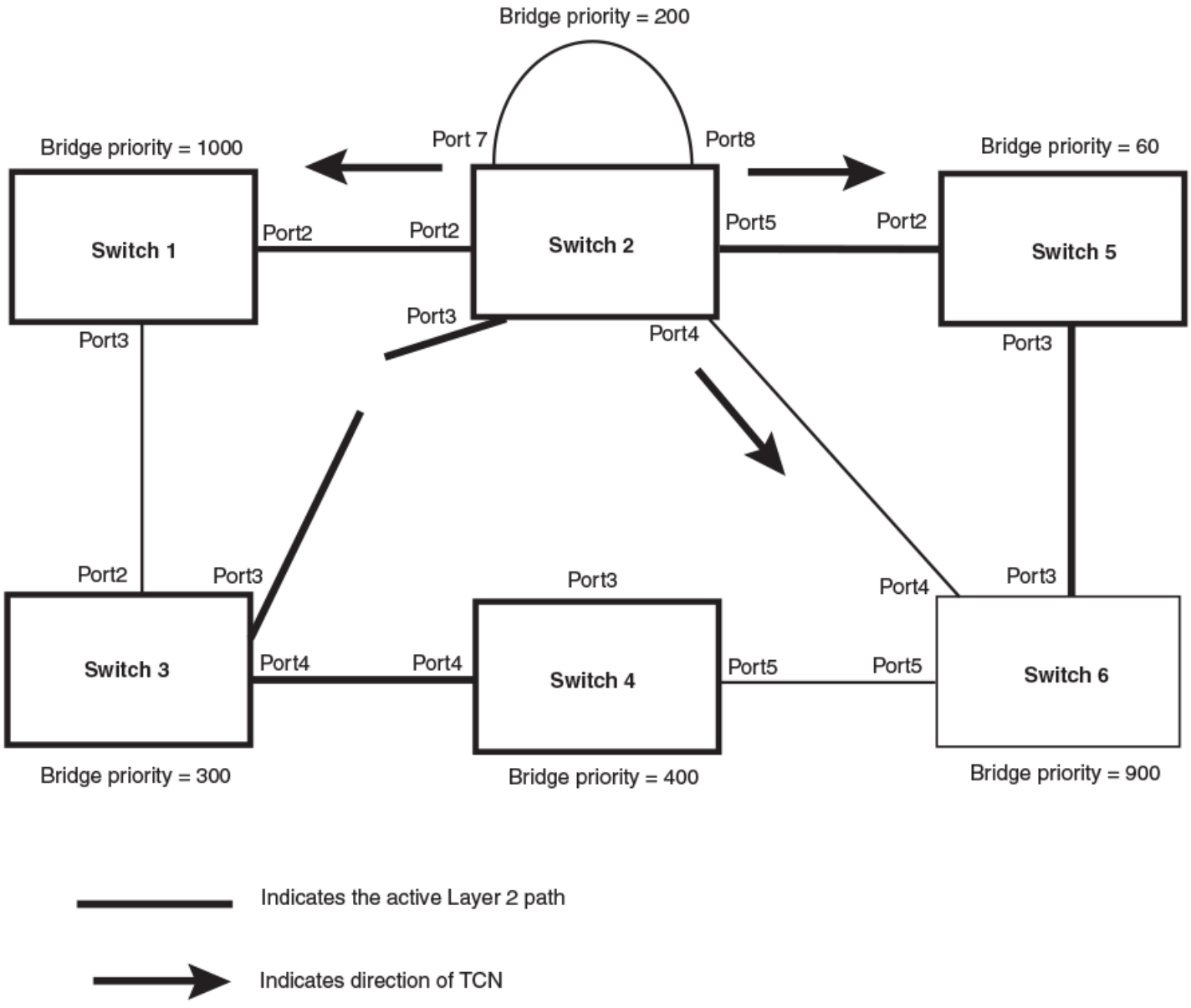

NOTE
Port numbers are simplified.

Then Switch 1, Switch 5, and Switch 6 send RST BPDUs that contain the TCN to Switch 3 and Switch 4 to complete the TCN propagation as shown in the following figure.

FIGURE 69 Completing the TCN propagation

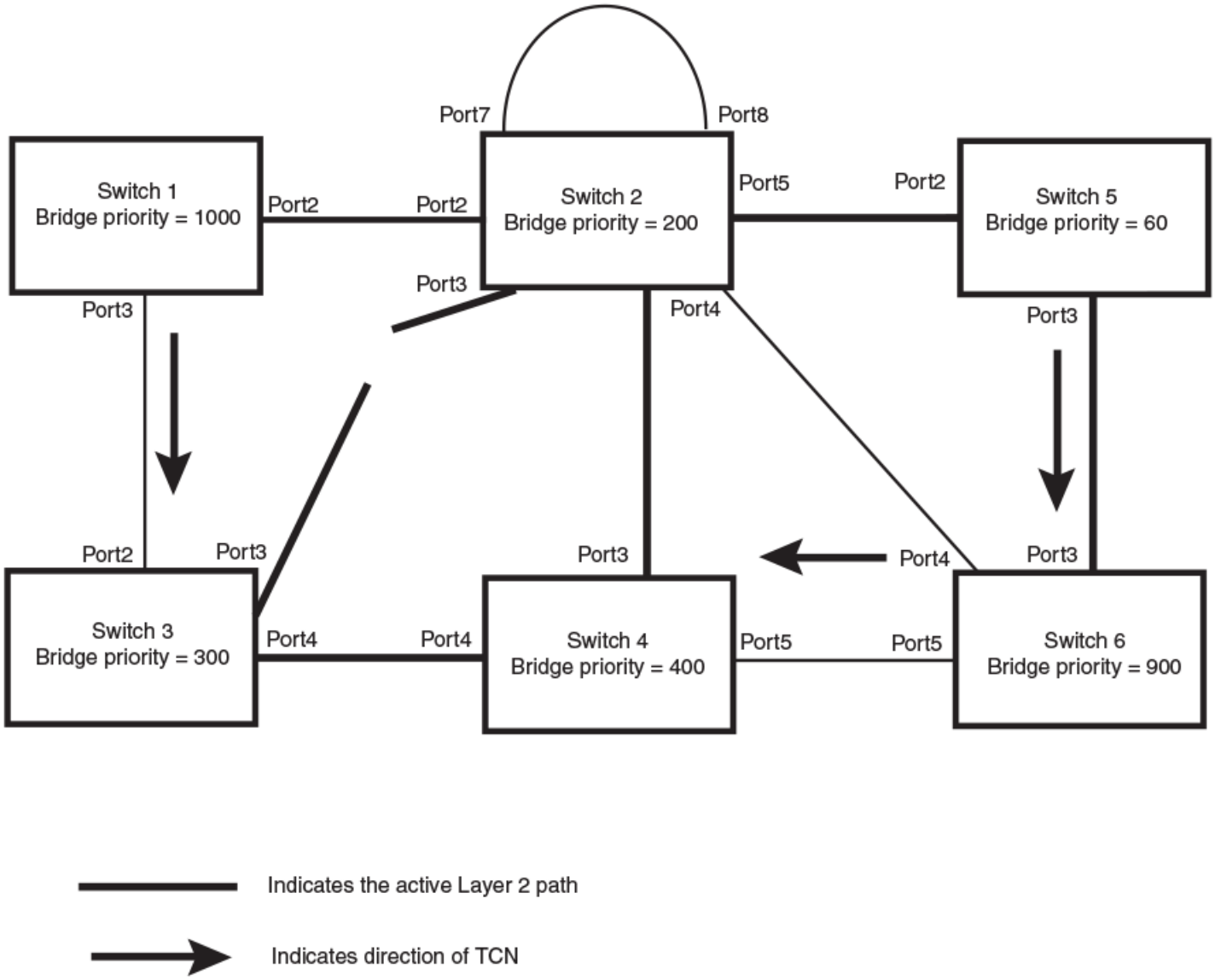

NOTE
Port numbers are simplified.

Compatibility of 802.1W with 802.1D

802.1W-enabled bridges are backward compatible with IEEE 802.1D bridges. This compatibility is managed on a per-port basis by the Port Migration state machine. **However, intermixing the two types of bridges in the network topology is not advisable if you want to take advantage of the rapid convergence feature.**

Compatibility with 802.1D means that an 802.1W-enabled port can send BPDUs in the STP or 802.1D format when one of the following events occur:

- The port receives a legacy BPDU. A legacy BPDU is an STP BPDU or a BPDU in an 802.1D format. The port that receives the legacy BPDU automatically configures itself to behave like a legacy port. It sends and receives legacy BPDUs only.

- The entire bridge is configured to operate in an 802.1D mode when an administrator sets the bridge parameter to zero at the CLI, forcing all ports on the bridge to send legacy BPDUs only.

Once a port operates in the 802.1D mode, 802.1D convergence times are used and rapid convergence is not realized.

For example, in the following figure, Switch 10 and Switch 30 receive legacy BPDUs from Switch 20. Ports on Switch 10 and Switch 30 begin sending BPDUs in STP format to allow them to operate transparently with Switch 20.

FIGURE 70 802.1W bridges with an 802.1D bridge

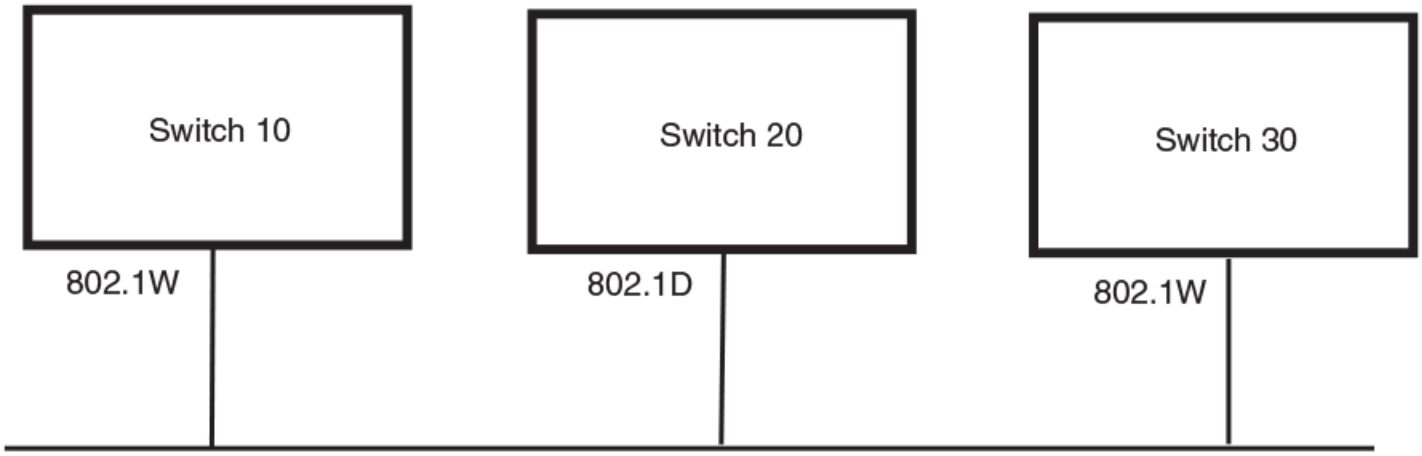

Once Switch 20 is removed from the LAN, Switch 10 and Switch 30 receive and transmit BPDUs in the STP format to and from each other. This state will continue until the administrator enables the **force-migration-check** command to force the bridge to send RSTP BPDU during a migrate time period. If ports on the bridges continue to hear only STP BPDUs after this migrate time period, those ports will return to sending STP BPDUs. However, when the ports receive RST BPDUs during the migrate time period, the ports begin sending RST BPDUs. The migrate time period is non-configurable. It has a value of three seconds.

NOTE
The IEEE standards state that 802.1W bridges need to interoperate with 802.1D bridges. IEEE standards set the path cost of 802.1W bridges to be between 1 and 200,000,000; whereas path cost of 802.1D bridges are set between 1 and 65,535. In order for the two bridge types to be able to interoperate in the same topology, the administrator needs to configure the bridge path cost appropriately. Path costs for either 802.1W bridges or 802.1D bridges need to be changed; in most cases, path costs for 802.1W bridges need to be changed.

Configuring 802.1W parameters on a RUCKUS device

The remaining 802.1W sections explain how to configure the 802.1W protocol in a RUCKUS device.

NOTE
With RSTP running, enabling static trunk on ports that are members of VLAN 4000 will keep the system busy for 20 to 25 seconds.

RUCKUS devices are shipped from the factory with 802.1W disabled. Use the following methods to enable or disable 802.1W. You can enable or disable 802.1W at the following levels:

- Port-based VLAN - Affects all ports within the specified port-based VLAN. When you enable or disable 802.1W within a port-based VLAN, the setting overrides the global setting. Thus, you can enable 802.1W for the ports within a port-based VLAN even when 802.1W is globally disabled, or disable the ports within a port-based VLAN when 802.1W is globally enabled.
- Individual port - Affects only the individual port. However, if you change the 802.1W state of the LAG virtual interface in a LAG, the change affects all ports in the LAG.

Enabling or disabling 802.1W in a port-based VLAN

Use the following procedure to disable or enable 802.1W on a device on which you have configured a port-based VLAN. Changing the 802.1W state in a VLAN affects only that VLAN.

To enable 802.1W for all ports in a port-based VLAN, enter commands such as the following.

```
device(config)#vlan 10
device(config-vlan-10)#spanning-tree 802-1w
```

Note regarding pasting 802.1W settings into the running configuration

If you paste 802.1W settings into the running configuration, and the pasted configuration includes ports that are already up, the ports will initially operate in STP legacy mode before operating in 802.1W RSTP mode. For example, the following pasted configuration will cause ethernet ports 1/1/1 and 1/1/2 to temporarily operate in STP legacy mode, because these ports are already up and running.

```
configure terminal
vlan 120
tag ethernet 1/1/1 to 1/1/2
spanning-tree 802-1w
spanning-tree 802-1w priority 1001
end
```

To avoid this issue, 802.1W commands/settings that are pasted into the configuration should be in the following order.

1. Ports that are not yet connected
2. 802.1W RSTP settings
3. Ports that are already up

Example

```
configure terminal
vlan 120
untag ethernet 2/1/1
spanning-tree 802-1w
spanning-tree 802-1w priority 1001
tag ethernet 1/1/1 to 1/1/2
end
```

In the above configuration, untagged ethernet port 2/1/1 is added to VLAN 120 *before* the 802.1W RSTP settings, and ethernet ports 1/1/1 and 1/1/2 are added *after* the 802.1W RSTP settings. When these commands are pasted into the running configuration, the ports will properly operate in 802.1W RSTP mode.

Enabling or disabling 802.1W on a single spanning tree

To enable 802.1W for all ports of a single spanning tree, enter a command such as the following.

```
device(config-vlan-10)# spanning-tree single 802-1w
```

Disabling or enabling 802.1W on an individual port

The **spanning-tree 802-1w** or **spanning-tree single 802-1w** command must be used to initially enable 802.1W on ports. Both commands enable 802.1W on all ports that belong to the VLAN or to the single spanning tree.

Once 802.1W is enabled on a port, it can be disabled on individual ports. 802.1W that have been disabled on individual ports can then be enabled as required.

NOTE
If you change the 802.1W state of the LAG virtual interface in a LAG, the change affects all ports in that LAG.

To disable or enable 802.1W on an individual port, enter commands such as the following.

```
device(config)# interface ethernet 1/1/1
device(config-if-e1000-1/1/1)# no spanning-tree
```

Changing 802.1W bridge parameters

When you make changes to 802.1W bridge parameters, the changes are applied to individual ports on the bridge. To change 802.1W bridge parameters, use the following methods.

To designate a priority for a bridge, enter a command such as the following.

```
device(config)# spanning-tree 802-1w priority 10
```

The command in this example changes the priority on a device on which you have not configured port-based VLANs. The change applies to the default VLAN. If you have configured a port-based VLAN on the device, you can configure the parameters only at the configuration level for individual VLANs. Enter commands such as the following.

```
device(config)# vlan 20
device(config-vlan-20)# spanning-tree 802-1w priority 0
```

To make this change in the default VLAN, enter the following commands.

```
device(config)# vlan 1
device(config-vlan-1)# spanning-tree 802-1w priority 0
```

Changing port parameters

The 802.1W port commands can be enabled on individual ports or on multiple ports, such as all ports that belong to a VLAN.

The 802.1W port parameters are preconfigured with default values. If the default parameters meet your network requirements, no other action is required.

You can change the following 802.1W port parameters using the following method.

```
device(config)# vlan 10
device(config-vlan-10)# spanning-tree 802-1w ethernet 1/1/5 path-cost 15 priority 64
```

The **path-cost** *value* parameter specifies the cost of the port path to the root bridge. 802.1W prefers the path with the lowest cost. You can specify a value from 1 - 20,000,000. The following table shows the recommended path cost values from the IEEE standards.

TABLE 20 Recommended path cost values of 802.1W

Link speed	Recommended (Default) 802.1W path cost values	Recommended 802.1W patch cost range
Less than 100 kilobits per second	200,000,000	20,000,000 – 200,000,000
1 Megabit per second	20,000,000	2,000,000 – 200,000,000
10 Megabits per second	2,000,000	200,000 – 200,000,000
100 Megabits per second	200,000	20,000 – 200,000,000
1 Gbps per second	20,000	2,000 – 200,000,000
10 Gbps per second	2,000	200 – 20,000
100 Gbps per second	200	20 – 2,000
1 Terabits per second	20	2 – 200
10 Terabits per second	2	1 – 20

Example

Suppose you want to enable 802.1W on a system with no active port-based VLANs and change the hello-time from the default value of 2 to 8 seconds. Additionally, suppose you want to change the path and priority costs for ethernet port 1/1/5 only. To do so, enter the following commands.

```
device(config)# spanning-tree 802-1w hello-time 8
device(config)# spanning-tree 802-1w ethernet 1/1/5 path-cost 15 priority 64
```

Displaying information about 802-1w

To display a summary of 802-1w, use the following command.

```
device# show 802-1w
--- VLAN 1 [ STP Instance owned by VLAN 1 ] ---------------------------
VLAN 1 BPDU cam_index is 2 and the IGC and DMA master Are(HEX) 0 1 2 3
Bridge IEEE 802.1W Parameters:
Bridge            Bridge  Bridge Bridge Force   tx
Identifier        MaxAge  Hello  FwdDly Version Hold
hex               sec     sec    sec            cnt
800000e080541700  20      2      15     Default 3
RootBridge        RootPath   DesignatedBri-    Root  Max  Fwd  Hel
Identifier        Cost       dge Identifier    Port  Age  Dly  lo
hex                          hex                    sec  sec  sec
800000e0804c9c00  200000     800000e0804c9c00  1     20   15   2
Port IEEE 802.1W Parameters:
      <--- Config Params -->|<-------------- Current state ----------------->
Port  Pri PortPath P2P Edge Role       State      Designa- Designated
Num       Cost     Mac Port                      ted cost bridge
1/1/1 128 200000   F   F    ROOT       FORWARDING 0        800000e0804c9c00
1/1/2 128 200000   F   F    DESIGNATED FORWARDING 200000   800000e080541700
1/1/3 128 200000   F   F    DESIGNATED FORWARDING 200000   800000e080541700
1/1/4 128 200000   F   F    BACKUP     DISCARDING 200000   800000e080541700
```

To display detailed information about 802-1W, enter the show 802-1w detail command.

```
device# show 802-1w detail
========================================================================
VLAN 1 - MULTIPLE SPANNING TREE (MSTP - IEEE 802.1W) ACTIVE
========================================================================
BridgeId 800000e080541700, forceVersion 2, txHoldCount 3
Port 1/1/1 - Role: ROOT - State: FORWARDING
  PathCost 200000, Priority 128, AdminOperEdge F, AdminPt2PtMac F
  DesignatedPriority - Root: 0x800000e0804c9c00, Bridge: 0x800000e080541700
  ActiveTimers - rrWhile 4 rcvdInfoWhile 4
  MachineStates - PIM: CURRENT, PRT: ROOT_PORT, PST: FORWARDING
  TCM: ACTIVE, PPM: SENDING_STP, PTX: TRANSMIT_IDLE
  Received - RST BPDUs 0, Config BPDUs 1017, TCN BPDUs 0
Port 1/1/2 - Role: DESIGNATED - State: FORWARDING
  PathCost 200000, Priority 128, AdminOperEdge F, AdminPt2PtMac F
  DesignatedPriority - Root: 0x800000e0804c9c00, Bridge: 0x800000e080541700
  ActiveTimers - helloWhen 0
  MachineStates - PIM: CURRENT, PRT: DESIGNATED_PORT, PST: FORWARDING
  TCM: ACTIVE, PPM: SENDING_RSTP, PTX: TRANSMIT_IDLE
  Received - RST BPDUs 0, Config BPDUs 0, TCN BPDUs 0
```

802.1W Draft 3

As an alternative to full 802.1W, you can configure 802.1W Draft 3. 802.1W Draft 3 provides a subset of the RSTP capabilities described in the 802.1W STP specification.

802.1W Draft 3 support is disabled by default. When the feature is enabled, if a root port on a RUCKUS device that is not the root bridge becomes unavailable, the device can automatically Switch over to an alternate root port, without reconvergence delays. 802.1W Draft 3 does not apply to the root bridge, since all the root bridge ports are always in the forwarding state.

The following figure shows an example of an optimal STP topology. In this topology, all the non-root bridges have at least two paths to the root bridge (Switch 1 in this example). One of the paths is through the root port. The other path is a backup and is through the alternate port. While the root port is in the forwarding state, the alternate port is in the blocking state.

FIGURE 71 802.1W Draft 3 RSTP ready for failover

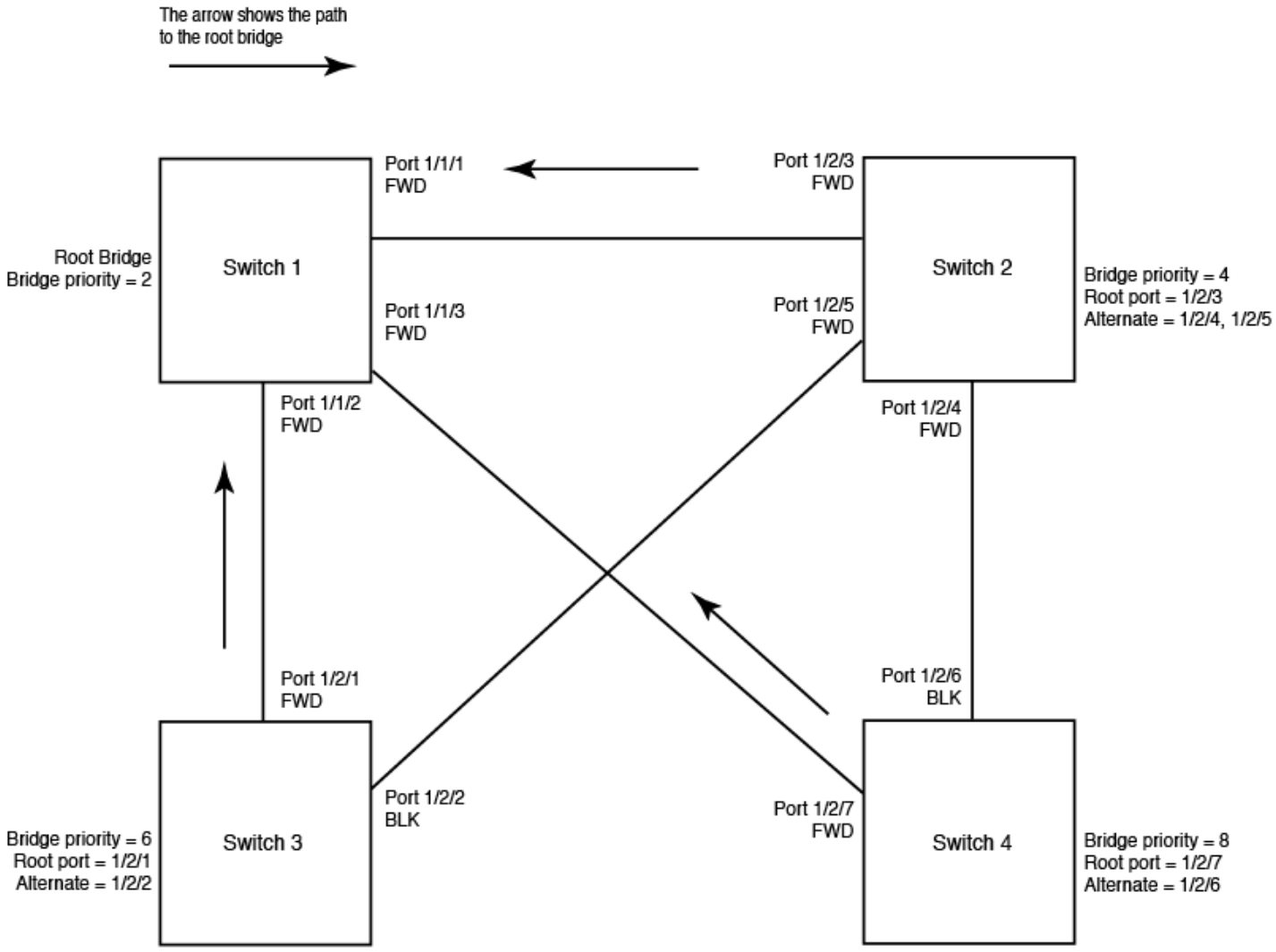

If the root port on a Switch becomes unavailable, 802.1W Draft 3 immediately fails over to the alternate port, as shown in the following figure.

FIGURE 72 802.1W Draft 3 RSTP failover to alternate root port

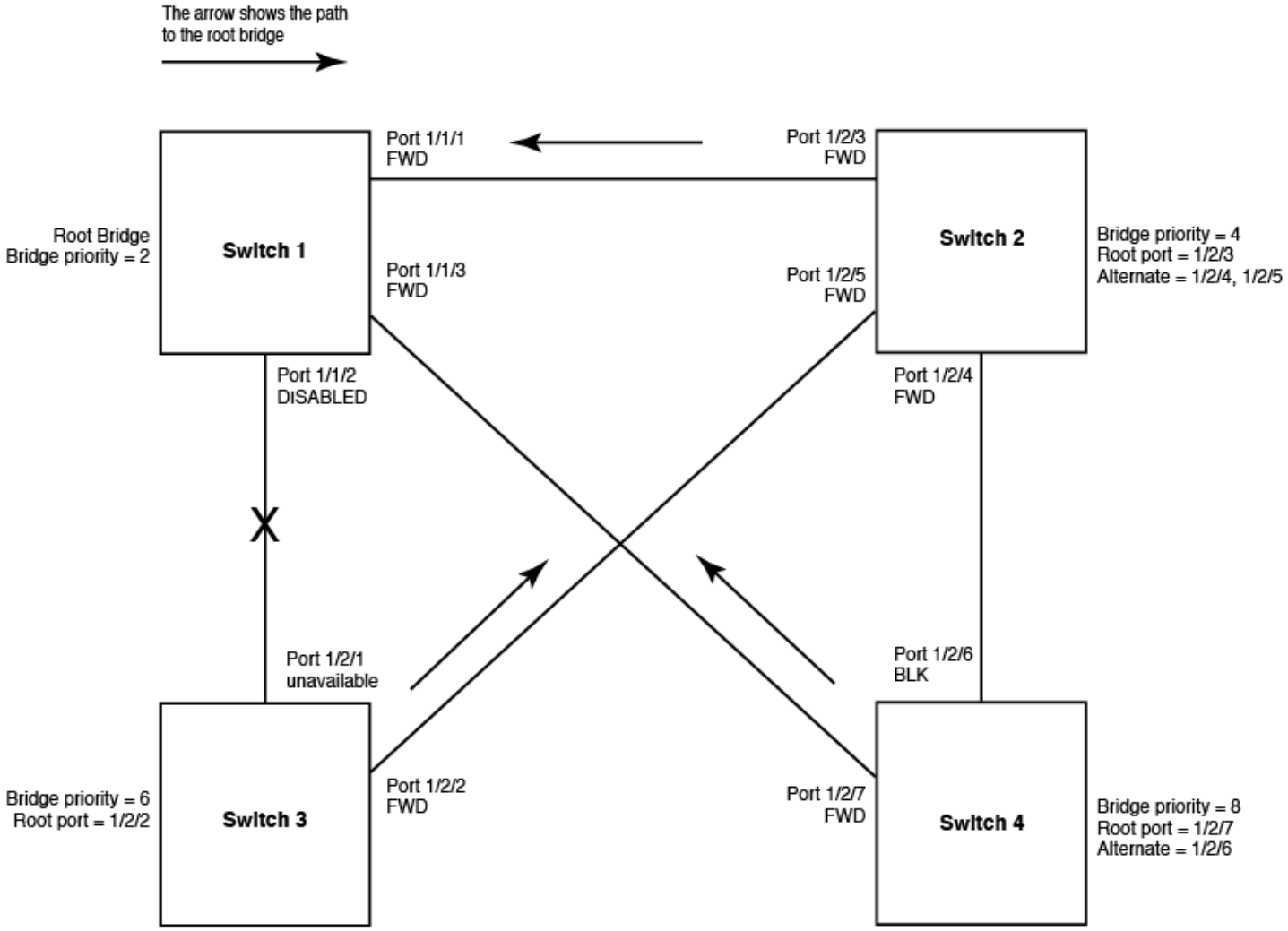

In this example, port 1/2/1 on Switch 3 has become unavailable. In standard STP (802.1D), if the root port becomes unavailable, the Switch must go through the listening and learning stages on the alternate port to reconverge with the spanning tree. Thus, port 1/2/2 must go through the listening and learning states before entering the forwarding state and thus reconverging with the spanning tree.

802.1W Draft 3 avoids the reconvergence delay by calculating an alternate root port, and immediately failing over to the alternate port if the root port becomes unavailable. The alternate port is in the blocking state as long as the root port is in the forwarding state, but moves immediately to the active state if the root port becomes unavailable. Thus, using 802.1W Draft 3, Switch 3 immediately fails over to port 1/2/2, without the delays caused by the listening and learning states.

802.1W Draft 3 selects the port with the next-best cost to the root bridge. For example, on Switch 3, port 1/2/1 has the best cost to the root bridge and thus is selected by STP as the root port. Port 1/2/2 has the next-best cost to the root bridge, and thus is selected by 802.1W Draft 3 as the alternate path to the root bridge.

Once a failover occurs, the Switch no longer has an alternate root port. If the port that was an alternate port but became the root port fails, standard STP is used to reconverge with the network. You can minimize the reconvergence delay in this case by setting the forwarding delay on the

root bridge to a lower value. For example, if the forwarding delay is set to 15 seconds (the default), change the forwarding delay to a value from 3 - 10 seconds.

During failover, 802.1W Draft 3 flushes the MAC addresses leaned on the unavailable root port, selects the alternate port as the new root port, and places that port in the forwarding state. If traffic is flowing in both directions on the new root port, addresses are flushed (moved) in the rest of the spanning tree automatically.

Spanning tree reconvergence time

Spanning tree reconvergence using 802.1W Draft 3 can occur within one second.

After the spanning tree reconverges following the topology change, traffic also must reconverge on all the bridges attached to the spanning tree. This is true regardless of whether 802.1W Draft 3 or standard STP is used to reconverge the spanning tree.

Traffic reconvergence happens after the spanning tree reconvergence, and is achieved by flushing the Layer 2 information on the bridges:

- Following 802.1W Draft 3 reconvergence of the spanning tree, traffic reconvergence occurs in the time it takes for the bridge to detect the link changes plus the STP maximum age set on the bridge.
- If standard STP reconvergence occurs instead, traffic reconvergence takes two times the forward delay plus the maximum age.

  NOTE
  802.1W Draft 3 does not apply when a failed root port comes back up. When this happens, standard STP is used.

802.1w configuration considerations

802.1w Draft 3 is disabled by default. To ensure optimal performance of the feature before you enable it, do the following:

- Configure the bridge priorities so that the root bridge is one that supports 802.1w Draft 3. (Use a RUCKUS device or third-party device that supports 802.1w Draft 3.)
- Change the forwarding delay on the root bridge to a value lower than the default 15 seconds. RUCKUS recommends a value from 3 - 10 seconds. The lower forwarding delay helps reduce reconvergence delays in cases where 802.1w Draft 3 is not applicable, such as when a failed root port comes back up.
- Configure the bridge priorities and root port costs so that each device has an active path to the root bridge if its root port becomes unavailable. For example, port 1/2/2 is connected to port 1/2/5 on Switch 2, which has the second most favorable bridge priority in the spanning tree.

  NOTE
  If reconvergence involves changing the state of a root port on a bridge that supports 802.1d STP but not 802.1w Draft 3, then reconvergence still requires the amount of time it takes for the ports on the 802.1d bridge to change state to forwarding (as needed), and receive BPDUs from the root bridge for the new topology.

Enabling 802.1w Draft 3

802.1w Draft 3 is disabled by default. The procedure for enabling the feature differs depending on whether single STP is enabled on the device.

NOTE
STP must be enabled before you can enable 802.1w Draft 3.

Enabling 802.1w Draft 3 when single STP is not enabled

By default, each port-based VLAN on the device has its own spanning tree. To enable 802.1w Draft 3 in a port-based VLAN, enter commands such as the following.

```
device(config)# vlan 10
device(config-vlan-10)# spanning-tree rstp
```

This command enables 802.1w Draft 3. You must enter the command separately in each port-based VLAN in which you want to run 802.1w Draft 3.

> **NOTE**
> This command does not also enable STP. To enable STP, first enter the **spanning-tree** command without the **rstp** parameter. After you enable STP, enter the **spanning-tree rstp** command to enable 802.1w Draft 3.

To disable 802.1w Draft 3, enter the following command.

```
device(config-vlan-10)# no spanning-tree rstp
```

Enabling 802.1w Draft 3 when single STP is enabled

To enable 802.1w Draft 3 on a device that is running single STP, enter the following command at the global CONFIG level of the CLI.

```
device(config)# spanning-tree single rstp
```

This command enables 802.1w Draft 3 on the whole device.

> **NOTE**
> This command does not also enable single STP. To enable single STP, first enter the **spanning-tree single** command without the **rstp** parameter. After you enable single STP, enter the **spanning-tree single rstp** command to enable 802.1w Draft 3.

To disable 802.1w Draft 3 on a device that is running single STP, enter the following command.

```
device(config)# no spanning-tree single rstp
```

Single Spanning Tree (SSTP)

By default, each port-based VLAN on a RUCKUS device runs a separate spanning tree, which you can enable or disable on an individual VLAN basis.

Alternatively, you can configure a RUCKUS device to run a single spanning tree across all ports and VLANs on the device. The Single STP feature (SSTP) is especially useful for connecting a RUCKUS device to third-party devices that run a single spanning tree in accordance with the 802.1Q specification.

SSTP uses the same parameters, with the same value ranges and defaults, as the default STP support on RUCKUS devices. Refer to STP parameters and defaults on page 153.

SSTP defaults

SSTP is disabled by default. When you enable the feature, all VLANs on which STP is enabled become members of a single spanning tree. All VLANs on which STP is disabled are excluded from the single spanning tree.

To add a VLAN to the single spanning tree, enable STP on that VLAN.To remove a VLAN from the single spanning tree, disable STP on that VLAN.

When you enable SSTP, all the ports that are in port-based VLANs with STP enabled become members of a single spanning tree domain. Thus, the ports share a single BPDU broadcast domain. The RUCKUS device places all the ports in a non-configurable VLAN, 4094, to implement the SSTP domain. However, this VLAN does not affect port membership in the port-based VLANs you have configured. Other broadcast traffic is still contained within the individual port-based VLANs. Therefore, you can use SSTP while still using your existing VLAN configurations without changing

your network. In addition, SSTP does not affect 802.1Q tagging. Tagged and untagged ports alike can be members of the single spanning tree domain.

> **NOTE**
> When SSTP is enabled, the BPDUs on tagged ports go out untagged.

If you disable SSTP, all VLANs that were members of the single spanning tree run MSTP instead. In MSTP, each VLAN has its own spanning tree. VLANs that were not members of the single spanning tree were not enabled for STP. Therefore, STP remains disabled on those VLANs.

Enabling SSTP

To enable SSTP, use one of the following methods.

> **NOTE**
> If the device has only one port-based VLAN (the default VLAN), then the device is already running a single instance of STP. In this case, you do not need to enable SSTP. You need to enable SSTP only if the device contains more than one port-based VLAN and you want all the ports to be in the same STP broadcast domain.

To configure the RUCKUS device to run a single spanning tree, enter the following command at the global CONFIG level.

```
device(config)# spanning-tree single
```

> **NOTE**
> If the device has only one port-based VLAN, the CLI command for enabling SSTP is not listed in the CLI. The command is listed only if you have configured a port-based VLAN.

To change a global STP parameter, enter a command such as the following at the global CONFIG level.

```
device(config)# spanning-tree single priority 2
```

This command changes the STP priority for all ports to 2.

To change an STP parameter for a specific port, enter commands such as the following.

```
device(config)# spanning-tree single ethernet 1/2/1 priority 10
```

The commands shown above override the global setting for STP priority and set the priority to 10 for port 1/2/1.

> **NOTE**
> Both commands listed above are entered in the global configuration mode.

Displaying SSTP information

To verify that SSTP is in effect, enter the following commands at any level of the CLI.

```
device# show span
```

The **detail** parameter and its additional optional parameters display detailed information for individual ports. Refer to Displaying detailed STP information for each interface on page 159.

STP per VLAN group

STP per VLAN group is an STP enhancement that provides scalability while overcoming the limitations of the following scalability alternatives:

- Standard STP - You can configure up to 254 instances of standard STP on a RUCKUS device. However, on RUCKUS ICX 7150 device only 253 STP instances are supported. More instances of STP may be required in large configurations. Using STP per VLAN group, you can aggregate STP instances.
- Single STP - Single STP allows all the VLANs to run STP, but each VLAN runs the same instance of STP, resulting in numerous blocked ports that do not pass any Layer 2 traffic. STP per VLAN group uses all available links by load balancing traffic for different instances of STP on different ports. A port that blocks traffic for one spanning tree forwards traffic for another spanning tree.

STP per VLAN group allows you to group VLANs and apply the same STP parameter settings to all the VLANs in the group. The following figure shows an example of a STP per VLAN group implementation.

FIGURE 73 STP per VLAN group example

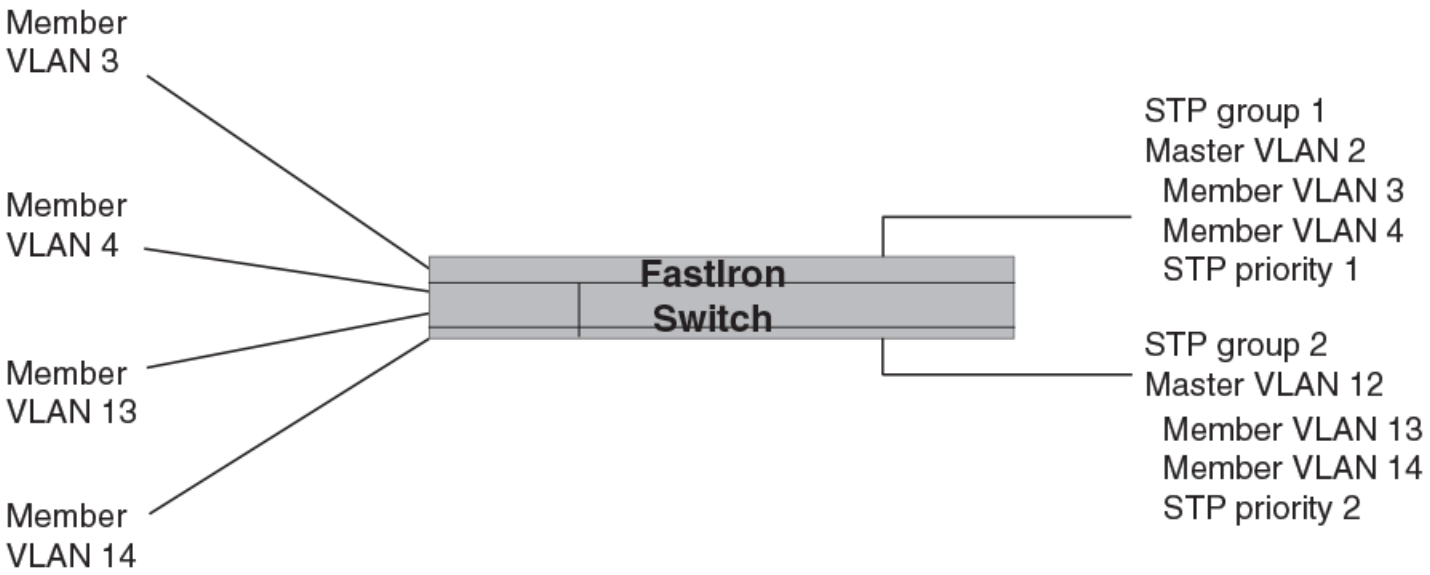

A master VLAN contains one or more member VLANs. Each of the member VLANs in the STP Group runs the same instance of STP and uses the STP parameters configured for the master VLAN. In this example, the FastIron switch is configured with VLANs 3, 4, 13, and 14. VLANs 3 and 4 are grouped in master VLAN 2, which is in STP group 1. VLANs 13 and 14 are grouped in master VLAN 12, which is in STP group 2. The VLANs in STP group 1 all share the same spanning tree. The VLANs in STP group 2 share a different spanning tree.

All the ports are tagged. The ports must be tagged so that they can be in both a member VLAN and the member's master VLAN. For example, ports 1/1/1 - 1/1/4 are in member VLAN 3 and also in master VLAN 2 (since master VLAN 2 contains member VLAN 3).

STP load balancing

Notice that the STP groups each have different STP priorities. In configurations that use the STP groups on multiple devices, you can use the STP priorities to load balance the STP traffic. By setting the STP priorities for the same STP group to different values on each device, you can cause each of the devices to be the root bridge for a different STP group. This type of configuration distributes the traffic evenly across the devices and also ensures that ports that are blocked in one STP group spanning tree are used by another STP group spanning tree for forwarding. Refer to Configuration example for STP load sharing on page 208 for an example using STP load sharing.

Configuring STP per VLAN group

To configure STP per VLAN group, perform the following tasks:

1. Configure the member VLANs.
2. Optionally, configure master VLANs to contain the member VLANs. This is useful when you have a lot of member VLANs and you do not want to individually configure STP on each one. Each of the member VLANs in the STP group uses the STP settings of the master VLAN.
3. Configure the STP groups. Each STP group runs a separate instance of STP.

   The following CLI commands implement the STP per VLAN group configuration shown in Figure 73 on page 207. The following commands configure the member VLANs (3, 4, 13, and 14) and the master VLANs (2 and 12). Notice that changes to STP parameters are made in the master VLANs only, not in the member VLANs.

```
device(config)# vlan 2
device(config-vlan-2)# spanning-tree priority 1
device(config-vlan-2)# tagged ethernet 1/1/1 to 1/1/4
device(config-vlan-2)# vlan 3
device(config-vlan-3)# tagged ethernet 1/1/1 to 1/1/4
device(config-vlan-3)# vlan 4
device(config-vlan-4)# tagged ethernet 1/1/1 to 1/1/4
device(config-vlan-4)# vlan 12
device(config-vlan-12)# spanning-tree priority 2
device(config-vlan-12)# tagged ethernet 1/1/1 to 1/1/4
device(config-vlan-12)# vlan 13
device(config-vlan-13)# tagged ethernet 1/1/1 to 1/1/4
device(config-vlan-13)# vlan 14
device(config-vlan-14)# tagged ethernet 1/1/1 to 1/1/4
device(config-vlan-14)# exit
```

   The following commands configure the STP groups.

```
device(config)# stp-group 1
device(config-stp-group-1)# master-vlan 2
device(config-stp-group-1)# member-vlan 3 to 4
device(config-stp-group-1)# exit
device(config)#stp-group 2
device(config-stp-group-2)# master-vlan 12
device(config-stp-group-2)# member-vlan 13 to 14
```

Configuration example for STP load sharing

The following figure shows another example of a STP per VLAN group implementation.

FIGURE 74 More complex STP per VLAN group example

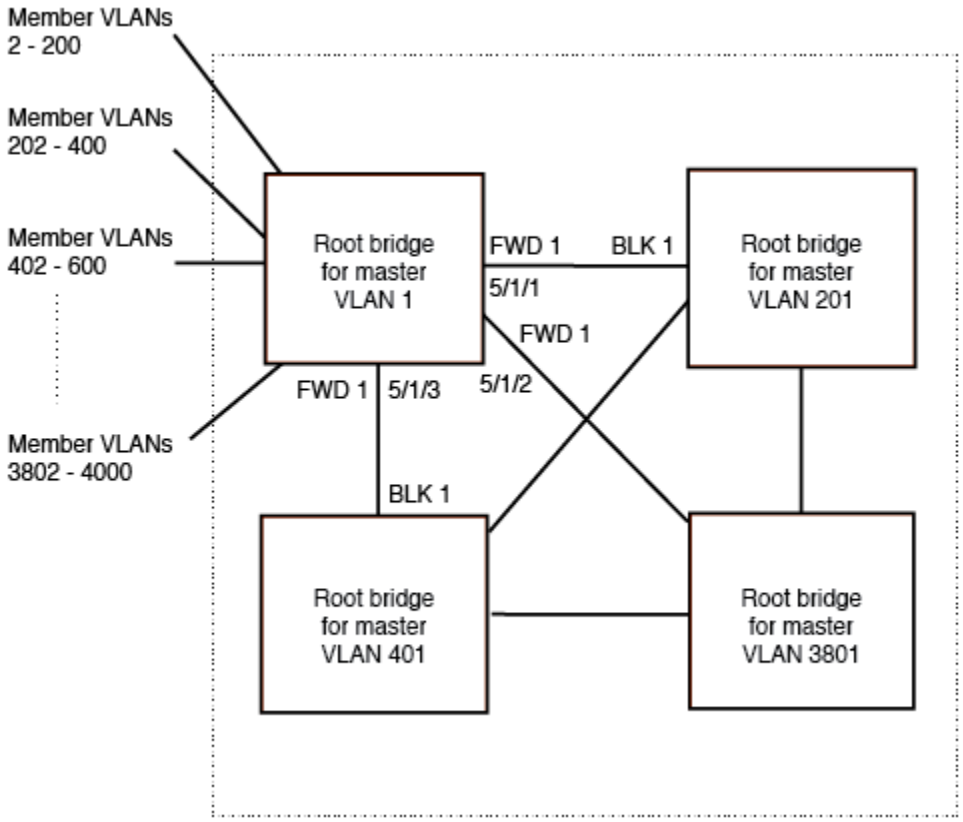

In this example, each of the devices in the core is configured with a common set of master VLANs, each of which contains one or more member VLANs. Each of the member VLANs in an STP group runs the same instance of STP and uses the STP parameters configured for the master VLAN.

The STP group ID identifies the STP instance. All VLANs within an STP group run the same instance of STP. The master VLAN specifies the bridge STP parameters for the STP group, including the bridge priority. In this example, each of the devices in the core is configured to be the default root bridge for a different master VLAN. This configuration ensures that each link can be used for forwarding some traffic. For example, all the ports on the root bridge for master VLAN 1 are configured to forward BPDUs for master VLAN spanning tree. Ports on the other devices block or forward VLAN 1 traffic based on STP convergence. All the ports on the root bridge for VLAN 2 forward VLAN 2 traffic, and so on.

All the ports are tagged. The ports must be tagged so that they can be in both a member VLAN and the member's master VLAN. For example, port 1/1/1 - and ports 5/1/1, 5/1/2, and 5/1/3 are in member VLAN 2 and master VLAN 1 (since master VLAN a contains member VLAN 2).

Here are the commands for configuring the root bridge for master VLAN 1 in figure Figure 73 on page 207 for STP per VLAN group. The first group of commands configures the master VLANs. Notice that the STP priority is set to a different value for each VLAN. In addition, the same VLAN has a different STP priority on each device. This provides load balancing by making each of the devices a root bridge for a different spanning tree.

```
device(config)# vlan 1
device(config-vlan-1)# spanning-tree priority 1
device(config-vlan-1)# tag ethernet 1/1/1 ethernet 5/1/1 to 5/1/3
device(config-vlan-1)# vlan 201
device(config-vlan-201)# spanning-tree priority 2
device(config-vlan-201)# tag ethernet 1/1/2 ethernet 5/1/1 to 5/1/3
device(config-vlan-201)# vlan 401
device(config-vlan-401)# spanning-tree priority 3
device(config-vlan-401)# tag ethernet 1/1/3 ethernet 5/1/1 to 5/1/3
...
device(config-vlan-3601)# vlan 3801
```

```
device(config-vlan-3801)# spanning-tree priority 20
device(config-vlan-3801)# tag ethernet 1/1/20 ethernet 5/1/1 to 5/1/3
device(config-vlan-3801)# exit
```

The next group of commands configures VLAN groups for the member VLANs. Notice that the VLAN groups do not contain the VLAN numbers assigned to the master VLANs. Also notice that no STP parameters are configured for the groups of member VLANs. Each group of member VLANs will inherit its STP settings from its master VLAN.

Set the bridge priority for each master VLAN to the highest priority (1) on one of the devices in the STP per VLAN group configuration. By setting the bridge priority to the highest priority, you make the device the default root bridge for the spanning tree. To ensure STP load balancing, make each of the devices the default root bridge for a different master VLAN.

```
device(config)# vlan-group 1 vlan 2 to 200
device(config-vlan-group-1)# tag ethernet 1/1/1 ethernet 5/1/1 to 5/1/3
device(config-vlan-group-1)# vlan-group 2 vlan 202 to 400
device(config-vlan-group-2)# tag ethernet 1/1/2 ethernet 5/1/1 to 5/1/3
device(config-vlan-group-2)# vlan-group 3 vlan 402 to 600
device(config-vlan-group-2)# tag ethernet 1/1/3 ethernet 5/1/1 to 5/1/3
...
device(config-vlan-group-19)# vlan-group 20 vlan 3082 to 3282
device(config-vlan-group-20)# tag ethernet 1/1/20 ethernet 5/1/1 to 5/1/3
device(config-vlan-group-20)# exit
```

The following group of commands configures the STP groups. Each STP group in this configuration contains one master VLAN, which contains a VLAN group. This example shows that an STP group also can contain additional VLANs (VLANs not configured in a VLAN group).

```
device(config)# stp-group 1
device(config-stp-group-1)# master-vlan 1
device(config-stp-group-1)# member-group 1
device(config-stp-group-1)# member-vlan 4001 4004 to 4010
device(config-stp-group-1)# stp-group 2
device(config-stp-group-2)# master-vlan 201
device(config-stp-group-2)# member-group 2
device(config-stp-group-2)# member-vlan 4002 4003 4011 to 4015
device(config-stp-group-2)# stp-group 3
device(config-stp-group-3)# master-vlan 401
device(config-stp-group-3)  #member-group 3
...
device(config-stp-group-19)# stp-group 20
device(config-stp-group-20)# master-vlan 3081
device(config-stp-group-20)# member-group 20
```

Spanning Tree Path Cost Support for 802.1D 2004

Support for the IEEE 802.1D 2004 defined set of spanning tree path costs can be configured globally for high-speed ports.

To ensure a loop-free topology, Spanning Tree Protocol (STP) determines a single active path between two network nodes by calculating a path cost from various properties, including the bridge ID, bridge priority, network segment cost, and port priority. The original IEEE 802.1D 1998 standard allows for a 16-bit path cost value. The introduction of higher port speeds such as 40 Gbps up to 10 Tbps led to a new IEEE 802.1D 2004 standard that allows a 32-bit path cost value for more granularity in assigning path costs using a redefined path cost formula.

STP Path Cost = 20,000,000,000/Link speed in Kbps

> **NOTE**
> The LAG cost calculation uses the individual port speed, not the LAG speed.

The challenge is to have all bridge devices in the network running the same set of path costs. A command line interface (CLI) command, **spanning-tree path-cost-method** with two keyword options of **long** or **short**, has been created to globally change the STP path cost method for all ports running STP. The 802.1D 1998 set of path cost options is the default setting and is referred to as the **short** option. When configured, the **long** option upgrades all ports running STP to use the 802.1D 2004 defined set of spanning tree path costs. To revert to the 802.1D 1998 set of path cost options, use the **short** option in global configuration mode.

NOTE
Any path cost configured for an individual interface is overwritten when the STP path costs are configured globally.

NOTE
LAG formation follows the legacy rule where aggregation of ports is allowed only for ports with the same default speed and media type.

Configuring Spanning Tree Path Cost Support for 802.1D 2004

Devices running Spanning Tree Protocol (STP) with higher speed ports (above 40 Gbps) can be configured to use more granular path costs as outlined by the 802.1D 2004 standards. To avoid contention with ports running STP path costs using the 802.1D 1998 standards, a CLI command is entered in global configuration mode to force all ports running STP to use the 802.1D 2004 path costs.

1. Enter global configuration mode.

```
device# configure terminal
```

2. Configure all ports running STP globally to use the 802.1D 2004 path costs.

```
device(config)# spanning-tree path-cost-method long
```

The following example configures all ports running STP globally to use the 802.1D 2004 path cost method.

```
device# configure terminal
device(config)# spanning-tree path-cost-method long
```

Displaying Spanning Tree 802.1D 2004 Path Cost Information

After the global configuration of the Spanning Tree 802.1D 2004 path cost method, you can display the defined path cost for high-speed ports.

Before performing this task, you must configure all ports running Spanning Tree Protocol (STP) globally to use the 802.1D 2004 path costs.

Use the **show span** command to display the port path costs after the 802.1D 2004 path cost method is configured globally. The Ethernet 1/1/5 and 1/1/6 port speeds are 1 Gbps.

```
device# show span vlan 100

STP instance owned by VLAN 100

Global STP (IEEE 802.1D) Parameters:

VLAN Root             Root Root      Prio Max He- Ho- Fwd Last    Chg Bridge
 ID   ID              Cost Port      rity Age llo ld  dly Chang   cnt Address
                                     Hex  sec sec sec sec sec
 100 8000cc4e246eb200 0    Root      8000 20  2   1   15  12739   2   cc4e246eb200

Port STP Parameters:

Port      Prio Path      State       Fwd    Design  Designated       Designated
Num       rity Cost                  Trans  Cost    Root             Bridge
          Hex
1/1/5     80   20000     FORWARDING  1      0       8000cc4e246eb200 8000cc4e246eb200
1/1/6     80   20000     FORWARDING  1      0       8000cc4e246eb200 8000cc4e246eb200
```

PVST/PVST+ compatibility

The FastIron family of switches support Cisco's Per VLAN Spanning Tree plus (PVST+), by allowing the device to run multiple spanning trees while also interoperating with IEEE 802.1Q devices[1].

NOTE
RUCKUS ports automatically detect PVST+ BPDUs and enable support for the BPDUs once detected. You do not need to perform any configuration steps to enable PVST+ support.

Support for Cisco's Per VLAN Spanning Tree plus (PVST+), allows a RUCKUS device to run multiple spanning trees while also interoperating with IEEE 802.1Q devices. RUCKUS ports automatically detect PVST+ BPDUs and enable support for the BPDUs once detected. The enhancement allows a port that is in PVST+ compatibility mode due to auto-detection to revert to the default multiple spanning trees mode when one of the following events occurs:

- The link is disconnected or broken
- The link is administratively disabled
- The link is disabled by interaction with the link-keepalive protocol

This enhancement allows a port that was originally interoperating with PVST+ to revert to multiple spanning trees when connected to a RUCKUS device.

1 Cisco user documentation for PVST/PVST+ refers to the IEEE 802.1Q spanning tree as the Common Spanning Tree (CST).

Overview of PVST and PVST+

Per VLAN Spanning Tree (PVST) is a Cisco proprietary protocol that allows a Cisco device to have multiple spanning trees. The Cisco device can interoperate with spanning trees on other PVST devices but cannot interoperate with IEEE 802.1Q devices. An IEEE 802.1Q device has all its ports running a single spanning tree. PVST+ is an extension of PVST that allows a Cisco device to also interoperate with devices that are running a single spanning tree (IEEE 802.1Q).

Enhanced PVST+ support allows a RUCKUS device to interoperate with PVST spanning trees and the IEEE 802.1Q spanning tree at the same time.

IEEE 802.1Q and PVST regions cannot interoperate directly but can interoperate indirectly through PVST+ regions. PVST BPDUs are tunnelled through 802.1Q regions, while PVST BPDUs for VLAN 1 (the IEEE 802.1Q VLAN) are processed by PVST+ regions. The following figure shows the interaction of IEEE 802.1Q, PVST, and PVST+ regions.

FIGURE 75 Interaction of IEEE 802.1Q, PVST, and PVST+ regions

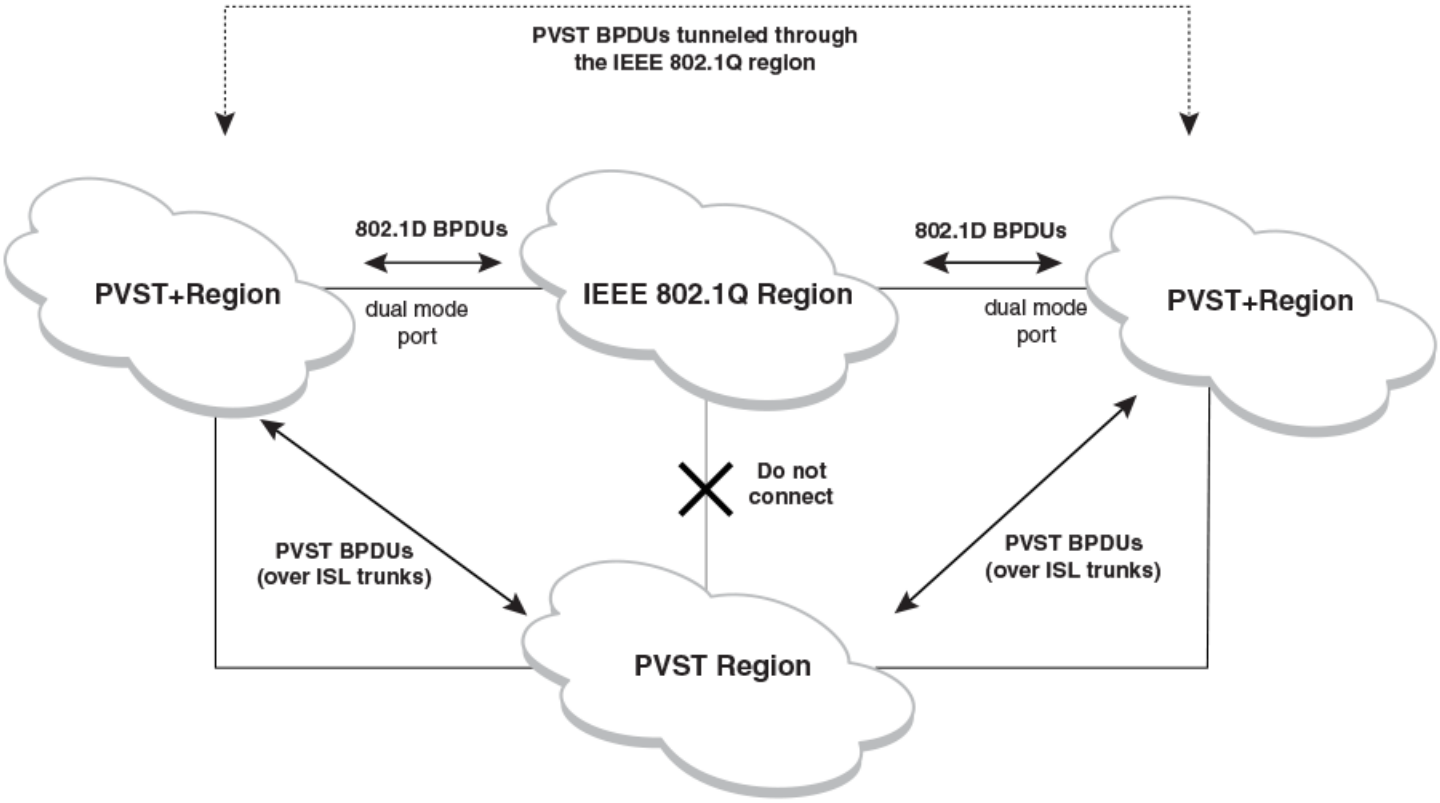

Configuring PVST+ support

PVST+ support is automatically enabled when the port receives a PVST BPDU. You can manually enable the support at any time or disable the support if desired.

A port that is in PVST+ compatibility mode due to auto-detection reverts to the default multiple spanning tree mode when one of the following events occurs:

- The link is disconnected or broken
- The link is administratively disabled
- The link is disabled by interaction with the link-keepalive protocol

This allows a port that was originally interoperating with PVST+ to revert to multiple spanning tree mode when connected to a RUCKUS device.

Enabling PVST+ support manually

To immediately enable PVST+ support on a port, enter commands such as the following.

```
device(config)# interface ethernet 1/1/1
device(config-if-1/1/1)# pvst-mode
```

NOTE

If you disable PVST+ support, the software still automatically enables PVST+ support if the port receives a BPDU with PVST+ format.

NOTE
If 802.1W and pvst-mode (either by auto-detection or by explicit configuration) are enabled on a tagged VLAN port, 802.1W will treat the PVST BPDUs as legacy 802.1D BPDUs.

Displaying PVST+ support information

To display PVST+ information for ports on a RUCKUS device, enter the following command at any level of the CLI.

```
device# show span pvst-mode
PVST+ Enabled on:
Port          Method
1/1/1       Set by configuration
1/1/2       Set by configuration
1/2/10      Set by auto-detect
1/3/12      Set by configuration
1/4/24      Set by auto-detect
```

PVST+ configuration examples

The following examples show configuration examples for two common configurations:

- Untagged IEEE 802.1Q BPDUs on VLAN 1 and tagged PVST+ BPDUs on other VLANs
- Tagged IEEE 802.1Q BPDUs on VLAN 1 and untagged BPDUs on another VLAN

Tagged port using default VLAN 1 as its port native VLAN

The following table shows an example of a PVST+ configuration that uses VLAN 1 as the untagged default VLAN and VLANs 2, 3, and 4 as tagged VLANs.

FIGURE 76 Default VLAN 1 for untagged BPDU

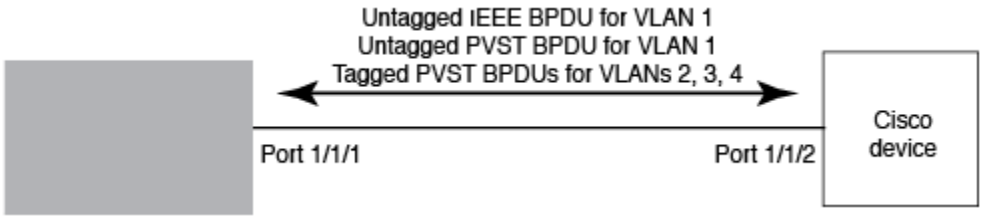

To implement this configuration, enter the following commands.

Commands on the RUCKUS **Device**

```
device(config)# vlan-group 1 vlan 2 to 4
device(config-vlan-group-1)# tagged ethernet 1/1/1
device(config-vlan-group-1)# exit
device(config)# interface ethernet 1/1/1
device(config-if-1/1/1)# pvst-mode
```

These commands configure a VLAN group containing VLANs 2, 3, and 4, add port 1/1/1 as a tagged port to the VLANs, and enable PVST+ support on the port. The implicit dual mode feature allows allows the port to send and receive untagged frames for the default VLAN (VLAN 1 in this case) in addition to tagged frames for VLANs 2, 3, and 4. Enabling the PVST+ support ensures that the port is ready to send and receive PVST+ BPDUs. If you do not manually enable PVST+ support, the support is not enabled until the port receives a PVST+ BPDU. The port can send and receive untagged frames for the default VLAN (VLAN1 in this case) in addition to tagged frames for VLANs 2,3 and 4.

The configuration leaves the default VLAN and the port Port Native VLAN unchanged. The default VLAN is 1 and the port Port Native VLAN also is 1. The implicit dual-mode feature supports untagged frames on the default VLAN only. Thus, port 1/1/1 can send and receive untagged BPDUs for VLAN 1 and can send and receive tagged BPDUs for the other VLANs.

Port 1/1/1 will process BPDUs as follows:

- Process IEEE 802.1Q BPDUs for VLAN 1.
- Process tagged PVST BPDUs for VLANs 2, 3, and 4.
- Drop untagged PVST BPDUs for VLAN 1.

Untagged port using VLAN 2 as port native VLAN

The following figure shows an example in which a port Port Native VLAN is not VLAN 1. In this case, VLAN 1 uses tagged frames and VLAN 2 uses untagged frames.

FIGURE 77 Port Native VLAN 2 for Untagged BPDUs

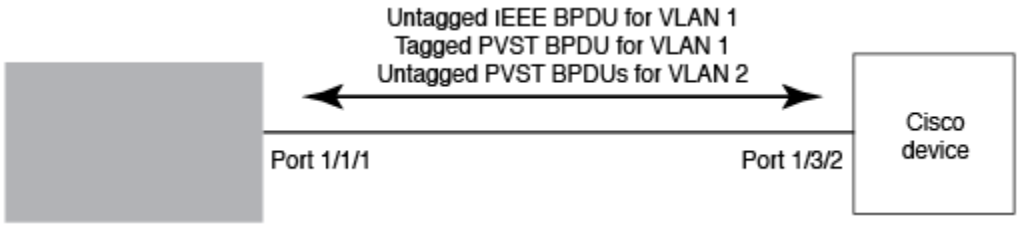

To implement this configuration, enter the following commands.

Commands on the RUCKUS **Device**

```
device(config)#default-vlan-id 4000
device(config)#vlan 1
device(config-vlan-1)#tagged ethernet 1/1/1
device(config-vlan-1)#exit
device(config)#vlan 2
device(config-vlan-2)#untagged ethernet 1/1/1
device(config-vlan-2)#exit
device(config)#interface ethernet 1/1/1
device(config-if-1/1/1)#vlan 2
device(config-vlan-2)#untagged ethernet 1/1/1
device(config-if-1/1/1)#pvst-mode
device(config-if-1/1/1)#exit
```

These commands change the default VLAN ID, configure port 1/1/1 as a tagged member of VLAN 1 and as untagged member of VLAN 2, and enable PVST+ support on port 1/1/1. Since VLAN 1 is tagged in this configuration, the default VLAN ID must be changed from VLAN 1 to another VLAN ID. Changing the default VLAN ID from 1 allows the port to process tagged frames for VLAN 1. Port 1/1/1 is added as untagged member of VLAN 2. As a result, the port processes untagged frames and untagged PVST BPDUs on VLAN 2.

Port 1/1/1 will process BPDUs as follows:

- Process IEEE 802.1Q BPDUs for VLAN 1.
- Process untagged PVST BPDUs for VLAN 2.
- Drop tagged PVST BPDUs for VLAN 1.

The following configuration is correct.

```
device(config)# default-vlan-id 1000
device(config)# vlan 1
device(config-vlan-1)# tagged ethernet 1/1/1 to 1/1/2
```

```
device(config-vlan-1)# exit
device(config)# interface ethernet 1/1/1
device(config-if-1/1/1)# pvst-mode
device(config-if-1/1/1)# exit
device(config)# interface ethernet 1/1/2
device(config-if-1/1/2)# pvst-mode
device(config-if-1/1/2)# exit
```

In the configuration above, all PVST BPDUs associated with VLAN 1 would be discarded. Since IEEE BPDUs associated with VLAN 1 are untagged, they are discarded because the ports in VLAN 1 are tagged. Effectively, the BPDUs are never processed by the Spanning Tree Protocol. STP assumes that there is no better bridge on the network and sets the ports to FORWARDING. This could cause a Layer 2 loop.

PVST+ Protect

If a PVST+ packet is received on a port configured for MSTP, a Ruckus device floods it to all its ports in the VLAN so that it reaches other PVST+ devices across the VLAN. This flooding can sometime cause a port to be blocked on the Cisco side. Use the PVST+ Protect feature to prevent this flooding, blocking the PVST+ BPDU and marking the port as ERR-DISABLED.

The following figure illustrates how a Cisco device running MSTP puts the port in a blocking state.

FIGURE 78 A Cisco device running MSTP putting the port in a blocking state

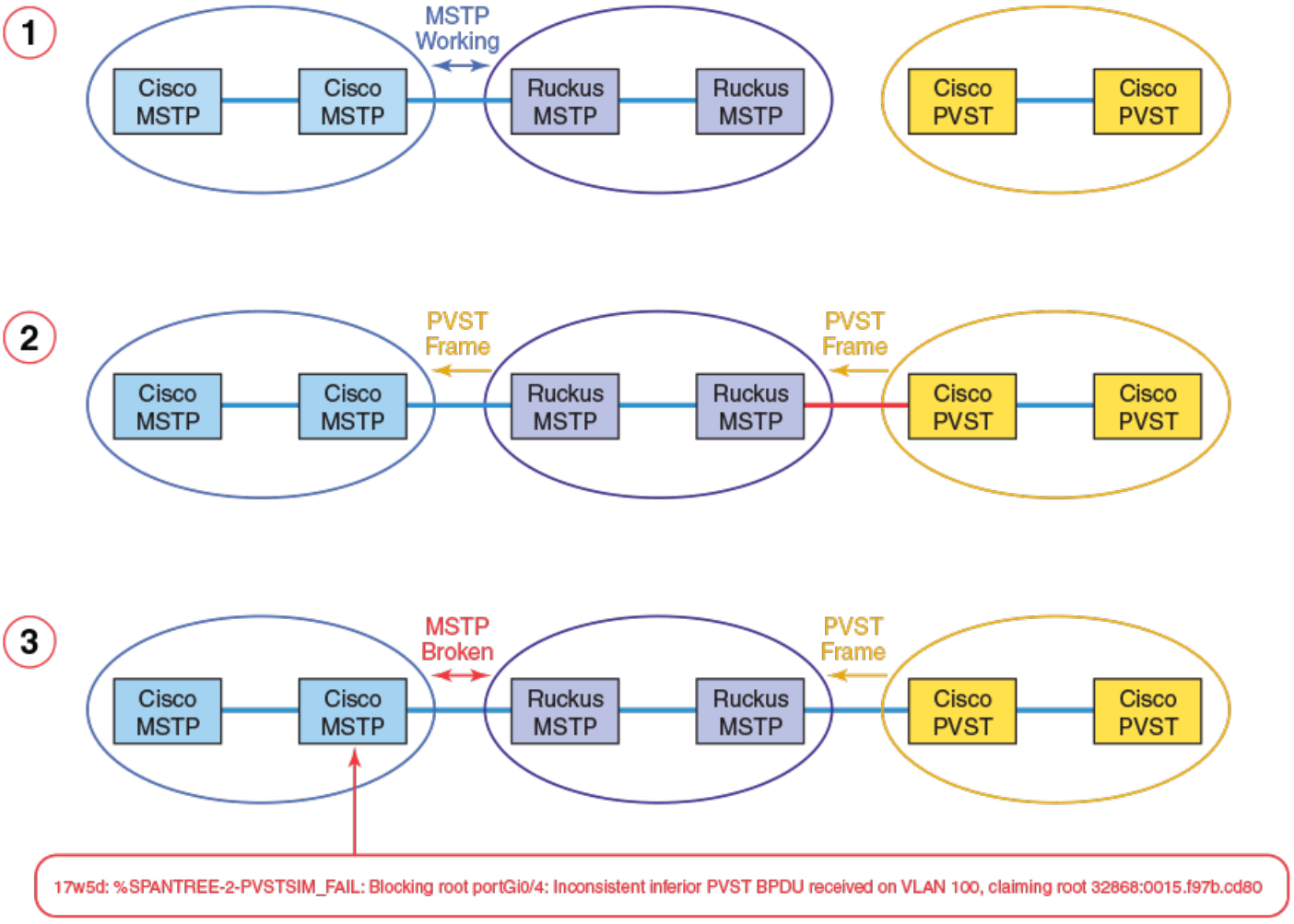

The processes are summarized as follows:

1. Ruckus and Cisco MSTP work correctly together, without any PVST devices in the topology/
2. PVST device is connected. Ruckus MSTP devices flood PVST frames across topology.
3. MSTP between Ruckus and Cisco no longer works correctly, because Cisco assumes legacy PVST device is connected.

To configure PVST+ Protect, complete the following steps in any order:

- In global configuration mode, enter the **errdisable recovery cause** command and specify **pvstplus-protect** as the cause. If you do not enable automatic recovery, blocked ports will remain blocked.
- Optionally, in global configuration mode, enter the **errdisable recovery interval** command and specify a nondefault recovery interval. (The default is 300 seconds.)
- In interface configuration mode, enter the **pvstplus-protect** command on an interface to be protected.

  NOTE
  The **pvstplus-protect** command cannot be issued concurrently with the **pvst-mode** command. The following error message appears:

  ```
  PVST mode not allowed on a PVST+ Protect mode
  ```

To enable error recovery globally:

```
device(config)# errdisable recovery cause pvstplus-protect
```

To change the recovery interval from the default, use the **errdisable recovery interval** command.

```
device(config)# errdisable recovery interval 150
```

To confirm the error recovery status, use the **show errdisable recovery** command.

```
device# show errdisable recovery
ErrDisable Reason                                                    Timer Status
-------------------------------------------------------------------------------
all reason                                                           Disabled
bpduguard                                                            Disabled
loopDetection                                                        Disabled
invalid license                                                      Disabled
packet-inerror                                                       Disabled
loam-critical-event                                                  Disabled
Reload the switch or stack to enable this port in 10G speed          Disabled
stack-port-resiliency                                                Disabled
broadcast traffic threshold exceeded                                 Disabled
multicast traffic threshold exceeded                                 Disabled
unknown unicast traffic threshold exceeded                           Disabled
pvstplus-protect                                                     Enabled
Timeout Value: 60 seconds
Interface that will be enabled at the next timeout:
Interface         Errdisable reason   Time left (sec)
--------------    -----------------   ---------------
Port 1/1/1         pvstplus-protect         31
```

To enable PVST+ Protect on a single port, use the **pvstplus-protect** command.

```
device(config)# interface ethernet 1/1/1
device(config-if-1/1/1)# pvstplus-protect
```

To confirm the running configuration on a specified Ethernet interface, use the **show running-config interface ethernet** command.

```
device# show running-config interface ethernet 1/1/1
interface ethernet 1/1/1
 port-name ToCisco1
 pvstplus-protect
```

To display the status of PVST+ Protect on the Ethernet interface, including the number of dropped PVST+ BPDUs:

```
device# show pvstplus-protect-ports ethernet 1/1/1
Port    PVST Drop Count
        1/1/1  2
```

To enable PVST+ Protect on a range of ports in interface configuration mode, use the **pvstplus-protect** command.

```
device(config)# interface ethernet 1/1/1 to 1/1/4
device(config-mif-1/1/1-1/1/4)# pvstplus-protect
```

To confirm the configuration on a specified Ethernet interface, use the **show interface ethernet** command.

```
device# show interface ethernet 1/1/1
GigabitEthernet1/1/1 is ERR-DISABLED (pvstplus-protect), line protocol is down
  Port down for 3 second(s)
  Hardware is GigabitEthernet, address is cc4e.2407.affe (bia cc4e.2407.affe)
  Configured speed auto, actual unknown, configured duplex fdx, actual unknown
  Configured mdi mode AUTO, actual unknown
  Tagged member of 7 L2 VLANs, untagged in VLAN 1, port state is DISABLED
  BPDU guard is Disabled, ROOT protect is Disabled, Designated protect is Disabl
ed
  Link Error Dampening is Disabled
  STP configured to ON, priority is level0, mac-learning is enabled
  Flow Control is config enabled, oper disabled, negotiation disabled
  Mirror disabled, Monitor disabled
  Mac-notification is disabled
  Not member of any active trunks
  Not member of any configured trunks
  Port name is ToCisco1
  Inter-Packet Gap (IPG) is 96 bit times
  MTU 1500 bytes
  300 second input rate: 0 bits/sec, 0 packets/sec, 0.00% utilization
  300 second output rate: 0 bits/sec, 0 packets/sec, 0.00% utilization
  8027 packets input, 561171 bytes, 0 no buffer
  Received 0 broadcasts, 8022 multicasts, 5 unicasts
  0 input errors, 0 CRC, 0 frame, 0 ignored
  0 runts, 0 giants
  2487 packets output, 420635 bytes, 0 underruns
  Transmitted 0 broadcasts, 2487 multicasts, 0 unicasts
  0 output errors, 0 collisions
  Relay Agent Information option: Disabled
Egress queues:
Queue counters    Queued packets    Dropped Packets
    0                  0                 0
    1                  0                 0
    2                  0                 0
    3                  0                 0
    4                  0                 0
    5                  0                 0
    6                  0                 0
    7                  0                 0
```

To view the logging status, use the **show logging** command.

```
device# show logging
Syslog logging: enabled ( 0 messages dropped, 0 flushes, 226 overruns)
    Buffer logging: level ACDMEINW, 50 messages logged
    level code: A=alert C=critical D=debugging M=emergency E=error
                I=informational N=notification W=warning
Static Log Buffer:
Dec 31 18:00:40:I:System: Stack unit 1 POE  PS 1, Internal Power supply  with 68
000 mwatts capacity is up
Dynamic Log Buffer (50 lines):
Jan  4 13:49:49:I:System: Interface ethernet 1/1/1, state down
Jan  4 13:49:49:I:MSTP: MST 0 Port 1/1/1 - DISCARDING
Jan  4 13:49:49:I:MSTP: MST 2 Port 1/1/1 - DISCARDING
Jan  4 13:49:49:I:MSTP: MST 1 Port 1/1/1 - DISCARDING
Jan  4 13:49:49:I:PVST: Received PVST+ BPDU on PVST+ Protect enabled Port 1/1/1
, Vlan 100. Error Disabling

<---output omitted--->
```

To clear the PVST+ Protect statistics for one or more specified Ethernet ports:

```
device# clear pvstplus-protect-statistics ethernet 1/1/1
```

To clear the PVST+ Protect statistics on a range of Ethernet interfaces:

```
device# clear pvstplus-protect-statistics ethernet 1/1/1 to 1/1/4
```

PVRST compatibility

PVRST, the "rapid" version of per-VLAN spanning tree (PVST), is a Cisco proprietary protocol. PVRST corresponds to the RUCKUS full implementation of IEEE 802.1w (RSTP). Likewise, PVST, also a Cisco proprietary protocol, corresponds to the RUCKUS implementation of IEEE 802.1D (STP). When a RUCKUS device receives PVRST BPDUs on a port configured to run 802.1w, it recognizes and processes these BPDUs and continues to operate in 802.1w mode.

PVRST compatibility is automatically enabled when a port receives a PVRST BPDU.

BPDU guard

In an STP environment, switches, end stations, and other Layer 2 devices use Bridge Protocol Data Units (BPDUs) to exchange information that STP will use to determine the best path for data flow.

The BPDU guard, an enhancement to STP, removes a node that reflects BPDUs back in the network. It enforces the STP domain borders and keeps the active topology predictable by not allowing any network devices behind a BPDU guard-enabled port to participate in STP.

In some instances, it is unnecessary for a connected device, such as an end station, to initiate or participate in an STP topology change. In this case, you can enable the STP BPDU guard feature on the RUCKUS port to which the end station is connected. STP BPDU guard shuts down the port and puts it into an errdisable state. This disables the connected device's ability to initiate or participate in an STP topology. A log message is then generated for a BPDU guard violation, and a CLI message is displayed to warn the network administrator of a severe invalid configuration. The BPDU guard feature provides a secure response to invalid configurations because the administrator must manually put the interface back in service if errdisable recovery is not enabled.

NOTE
BPDU guard is supported on tagged ports as long as it is tagged on both sides to the same VLAN.

Enabling BPDU protection by port

You can enable STP BPDU guard on individual interfaces. The feature is disabled by default.

To enable STP BPDU guard on a specific port, enter a command such as the following.

> **NOTE**
> Spanning tree must be enabled on the corresponding VLAN.

```
device(config) interface ethernet 1/1/2
device(config-if-e1000-1/1/2)# stp-bpdu-guard
```

You can also use the multiple interface command to enable this feature on multiple ports at once.

```
device(config)# interface ethernet 1/1/1 to 1/1/9
device(config-mif-1/1/1-1/1/9)# stp-bpdu-guard
device(config-mif-1/1/1-1/1/9)#
```

This will enable stp-bpdu-guard on ports 1/1/1 to 1/1/9

Re-enabling ports disabled by BPDU guard

When a BPDU Guard-enabled port is disabled by BPDU Guard, the RUCKUS device will place the port in **errdisable** state and display a message on the console indicating that the port is errdisabled (refer to BPDU guard status example console messages on page 221). In addition, the **show interface** command output will indicate that the port is errdisabled.

```
device# show interface ethernet 1/1/2
Gigabit Ethernet1/1/2 is ERR-DISABLED (bpduguard), line protocol is down
```

To re-enable a port that is in **errdisable** state, you must first disable the port then re-enable it. Enter commands such as the following.

```
device(config)# interface ethernet 1/1/2
device(config-if-e1000-1/1/2)# disable
device(config-if-e1000-1/1/2)# enable
```

If you attempt to enable an errdisabled port without first disabling it, the following error message will appear on the console.

```
device(config-if-e1000-1/1/2)# enable
Port 1/1/2 is errdisabled, do disable first and then enable to enable it
```

Displaying the BPDU guard status

To display the BPDU guard state, enter the **show running configuration** or the **show stp-bpdu-guard** command.

For the BPDU status enter the **stp-bpdu-guard** command.

```
device# show stp-bpdu-guard
BPDU Guard Enabled on:
Interface   Violation
Port 1/1/1   No
Port 1/1/2   No
Port 1/1/3   No
Port 1/1/4   No
Port 1/1/5   No
Port 1/1/6   No
Port 1/1/7   No
Port 1/1/8   No
Port 1/1/9   No
Port 1/1/10  No
Port 1/1/11  No
Port 1/1/12  Yes
Port 1/1/13  No
```

BPDU guard status example configurations

The following example shows how to configure BPDU guard at the interface level and to verify the configuration by issuing the **show stp-bpdu-guard** and the **show interface** commands.

```
device(config)# interface ethernet 1/1/1
device(config-if-e1000-1/1/1)# stp-bpdu-guard
device(config-if-e1000-1/1/1)#
device(config-if-e1000-1/1/1)# show stp-bpdu-guard
BPDU Guard Enabled on:
Port
1
device(config-if-e1000-1/1/1)#
device(config-if-e1000-1/1/1)# show interfaces ethernet 1
GigabitEthernet1/1/1 is up, line protocol is up
Port up for 40 seconds
Hardware is GigabitEthernet, address is 0000.00a0.7100 (bia 0000.00a0.7100)
Configured speed auto, actual 100Mbit, configured duplex fdx, actual fdx
Configured mdi mode AUTO, actual MDI
Member of L2 VLAN ID 2, port is untagged, port state is FORWARDING
BPDU guard is Enabled
, ROOT protect is Disabled
STP configured to ON, priority is level0, flow control enabled
mirror disabled, monitor disabled
Not member of any active trunks
Not member of any configured trunks
No port name
Mac-notification is Enabled
IPG MII 96 bits-time, IPG GMII 96 bits-time
IP MTU 1500 bytes
300 second input rate: 8 bits/sec, 0 packets/sec, 0.00% utilization
300 second output rate: 256 bits/sec, 0 packets/sec, 0.00% utilization
88 packets input, 15256 bytes, 0 no buffer
Received 75 broadcasts, 13 multicasts, 0 unicasts
1 input errors, 0 CRC, 0 frame, 0 ignored
0 runts, 0 giants
4799 packets output, 313268 bytes, 0 underruns
Transmitted 90 broadcasts, 4709
```

NOTE

The port up/down time is required only for physical ports and not for loopback/ ve/ tunnel ports.

BPDU guard status example console messages

A console message such as the following is generated after a BPDU guard violation occurs on a system that is running MSTP.

```
device(config-if-e1000-1/2/3)# MSTP: Received BPDU on BPDU guard enabled Port 1/2/3,errdisable Port 1/2/3
```

A console message such as the following is generated after a BPDU guard violation occurs on a system that is running STP.

```
device(config)# STP: Received BPDU on BPDU guard enabled Port 1/2/3 (vlan=1), errdisable Port 1/2/3
```

A console message such as the following is generated after a BPDU guard violation occurs on a system that is running RSTP.

```
device(config-vlan-1)# RSTP: Received BPDU on BPDU guard enabled Port 1/2/3 (vlan=1),errdisable Port 1/2/3
```

Root guard

The standard STP (802.1D), RSTP (802.1W) or 802.1S does not provide any way for a network administrator to securely enforce the topology of a switched Layer 2 network. The forwarding topology of a switched network is calculated on the basis of the root bridge position, along with other parameters. This means any switch can be the root bridge in a network as long as it has the lowest bridge ID. The administrator cannot enforce the position of the root bridge. A better forwarding topology comes with the requirement to place the root bridge at a specific predetermined location. Root guard can be used to predetermine a root bridge location and prevent rogue or unwanted switches from becoming the root bridge.

When root guard is enabled on a port, it keeps the port in a designated role. If the port receives a superior STP Bridge Protocol Data Units (BPDU), it puts the port into a root-inconsistent state and triggers a syslog message and an SNMP trap. The root-inconsistent state is equivalent to the blocking state in 802.1D and to the discarding state in 802.1W. No further traffic is forwarded on this port. This allows the bridge to prevent traffic from being forwarded on ports connected to rogue or misconfigured STP bridges.

Once the port stops receiving superior BPDUs, root guard automatically sets the port back to the learning state, and eventually to a forwarding state through the spanning-tree algorithm.

Configure root guard on all ports where the root bridge should not appear. This establishes a protective network perimeter around the core bridged network, cutting it off from the user network.

NOTE
Root guard may prevent network connectivity if it is improperly configured. Root guard must be configured on the perimeter of the network rather than the core.

NOTE
For the details of MSTP root guard, see "MSTP root guard on page 238".

Enabling STP root guard

An STP root guard is configured on an interface by entering commands similar to the following.

```
device(config)# interface ethernet 1/1/5
device(config-if-e10000-1/1/5)# spanning-tree root-protect
```

Enter the **no** form of the command to disable STP root guard on the port.

Displaying the STP root guard

To display the STP root guard state, enter the **show running configuration** or the **show span root-protect** command.

```
device# show span root-protect
Root Protection Enabled on:
Port 1/1/2
```

Displaying the root guard by VLAN

You can display root guard information for all VLANs or for a specific VLAN. For example, to display root guard violation information for VLAN 7.

If you do not specify a *vlan-id* , information for all VLANs is displayed.

To display root guard violation information for VLAN 7.

```
device# show spanning-tree vlan 7
STP instance owned by VLAN 7
Global STP (IEEE 802.1D) Parameters:
VLAN Root Root Root Prio Max He- Ho- Fwd Last Chg Bridge
ID ID Cost Port rity Age llo ld dly Chang cnt Address
```

```
Hex sec sec sec sec sec
7 a000000011112220 0 Root a000 20 2 1 15 4 4 000011112220
Port STP Parameters:
Port Prio Path State Fwd Design Designated Designated
Num rity Cost Trans Cost Root Bridge
Hex
1 80 19 ROOT-INCONS 2 0 a000000011112220 a000000011112220
```

Designated Protection

Designated Protection ensures that a port cannot go to the designated forwarding state in STP 802.1d or RSTP 802.1w.

You can enable Designated Protection on the port to ensure that it does not go to the designated forwarding state. For example, a fast uplink port should never become a designated port to avoid loops in a network topology. It should either be a root port in any STP state or a non-root port in a blocking state. If STP tries to put this port into the designated forwarding state, the device puts this port into a designated inconsistent STP state. This is effectively equivalent to the listening state in STP in which a port cannot transfer any user traffic. When STP no longer marks this port as a designated port, the port is automatically removed from the designated inconsistent state.

Designation Protection is a port-level feature, while the designated inconsistent state is a per-STP-instance, per-port state. In PVST, a port can belong to several VLANs where each VLAN runs a separate spanning tree instance. The designated inconsistent state in one spanning tree instance does not affect the traffic in other spanning tree instances.

For example, consider an interface eth 1 that is in VLAN 20 and VLAN 50. VLAN 20 runs one instance of STP and VLAN 50 runs another instance. Interface eth1 can be in the designated inconsistent state for VLAN 50 and block the VLAN 50 traffic while it is in root forwarding state for VLAN 20 and allow VLAN 20 traffic.

You can view the status of the Designated Protection feature on a port with the **show interface ethernet** command for that port.

NOTE
You cannot enable Designated Protection and Root Guard on the same port.
Designated Protection does not work with Multiple Spanning Tree Protocol (MSTP) 802.1s.

Enabling Designated Protection on a port

To disallow the designated forwarding state on a port in STP (802.1d or 802.1w), run the **spanning-tree designated-protect** command in interface configuration mode for that port.

The following example shows that the designated forwarding state is disallowed on Ethernet interface 1/1/1.

```
device(config)# ethernet interface 1/1/1
device(config-if-e1000-1/1/1)# spanning-tree designated-protect
```

Syslog message for a port in designated inconsistent state

The following syslog message is generated when a port is put in the designated inconsistent state.

```
5d19h00m12s:I:STP: VLAN 100 Designated-protect port 2/1/7, inconsistent, Put into Listening state
```

Packet InError Detection

Packet InError Detection identifies links that receive more number of bad frames than configured threshold and disables them to avoid instability in the network. For instance, if a network has redundant uplinks, usually only one link is in forwarding state and the rest are redundant and blocked. If one of the redundant links becomes faulty, it may drop the PDUs and become a forwarding link. This can cause loops in the network. Packet InError Detection detects the faults in the link and disables the link to prevent loops in the network.

Packet InError Detection counts an ingress frame that has one or more of the following errors as an inError packet:

- Alignment error
- CRC error
- Oversized frame error
- Internal received MAC address error (Errors that do not fall in the above 3 types)
- Symbol error (includes the fragmented, short, or undersized frames)

You can configure the number of inError packets allowed per port in a specified sampling interval. If the port receives more than the configured number of inError packets in two consecutive sampling intervals, then the port becomes error-disabled. The output of the **show interface ethernet** command for the affected port will show the status of the port as "ERR-DISABLED (packet-inerror)".

NOTE
It is recommended to use Packet InError Detection only on required ports. If you enable this on a large number of ports in a device and use a very short sampling interval, it may lead to heavy CPU usage.

NOTE
The inError count configured on the LAG virtual interface of a LAG is inherited by other member ports of the LAG. However, the LAG ports are individually sampled for inError packets. Therefore, inError packets on a port disable only that port and not the entire LAG.

NOTE
Executing commands that clear the packet counters, such as the **clear statistics** command may interfere with the proper functioning of Packet InError Detection because these commands reset the inError packet count.

Configuring Packet InError Detection

Perform the following steps to configure Packet InError Detection:

1. Run the **errdisable packet-inerror-detect** command in global configuration mode to enable the feature and to define the sampling time interval.
2. Run the **packet-inerror-detect** command in interface configuration mode of the port that you want to monitor for inError packets.
3. *(Optional)* If you want the ports to automatically recover from the error-disabled state after the expiry of a configured recovery timer, run the **errdisable recovery cause** and **errdisable recovery interval** commands in global configuration mode. For more details, see "Enabling an error-disabled port automatically" on page 15 on page 225 and Setting the recovery interval on page 225.

The following example shows the configuration of Packet InError Detection on a device and its Ethernet interface 1/1/1.

```
device(config)# errdisable packet-inerror-detect interval 3
device(config)# errdisable recovery cause packet-inerror-detect
device(config)# errdisable recovery interval 20
device(config)# interface ethernet 1/1/1
device(config-if-e1000-1/1/1)# packet-inerror-detect 10
```

The ethernet interface 1/1/1 becomes disabled if more than 10 inError packets are received in each of two consecutive 3-second intervals. After the interface is disabled, it automatically recovers to the enabled state after 20 seconds.

Syslog message for error-disabled port due to inError packets

The following syslog message is generated when a port is error-disabled because of inError packets.

```
0d01h38m44s:I:PORT: 1/1/37 is ERR-DISABLED due to number of packet inErrors exceeded the threshold
```

Error disable recovery

If a BPDU Guard violation or loop detection violation occurs, or the number of inError packets exceeds the configured threshold, or if an EFM-OAM enabled interface receives a critical event from the remote device, a port is placed into an error-disabled state, which is functionally equivalent to a disable state. Once in an error-disabled state, the port remains in that state until it is enabled either automatically or manually.

Enabling an error-disabled port automatically

To enable a port to recover automatically from the error-disabled state after the expiry of a configured error recovery timer, run the **errdisable recovery cause** command in global configuration mode.

For example, to enable error-disable recovery for BPDU guard, enter the following command:

```
device(config)# errdisable recovery cause bpduguard
```

NOTE

When automatic recovery re-enables the port, the port is not in the error-disabled state, but it can remain down for other reasons, such as the Tx/Rx of the fibre optic not being seated properly. Thus, the port is not able to receive the signal from the other side. In this case, after the optic is inserted correctly, you should manually disable the port and then enable it.

Enabling an error-disabled port manually

To enable an error-disabled port manually, you must first run the **disable** command and then the **enable** command in interface configuration mode to disable the port and then enable the port respectively.

Setting the recovery interval

The **errdisable recovery interval** command allows you to configure a timeout for ports in the error-disabled state, after which the ports are re-enabled automatically. To set the error-disabled recovery timeout interval, enter the following command:

```
device(config)# errdisable recovery interval 20
```

Displaying the error disable recovery state by interface

The port status of errdisabled displays in the output of the **show interface** and the **show interface brief** commands. In this example, errdisable is enabled on interface ethernet 1 and errdisable is enabled because of a BPDU guard violation.

```
device# show interfaces ethernet 1/1/1
GigabitEthernet1/1/1 is ERR-DISABLED (bpduguard),
 line protocol is down
    BPDU guard is Enabled, ROOT protect is Disabled
    Port down for 2 hours 45 minutes 10 seconds
    Hardware is GigabitEthernet, address is 0000.00a0.7100 (bia 0000.00a0.7100)
    Configured speed auto, actual unknown, configured duplex fdx, actual unknown
    Configured mdi mode AUTO, actual unknown
    Member of L2 VLAN ID 2, port is untagged, port state is DISABLED
    STP configured to ON, priority is level0, flow control enabled
```

```
mirror disabled, monitor disabled
Not member of any active trunks
Not member of any configured trunks
No port name
IPG MII 96 bits-time, IPG GMII 96 bits-time
IP MTU 1500 bytes
300 second input rate: 0 bits/sec, 0 packets/sec, 0.00% utilization
300 second output rate: 0 bits/sec, 0 packets/sec, 0.00% utilization
145 packets input, 23561 bytes, 0 no buffer
Received 124 broadcasts, 21 multicasts, 0 unicasts
1 input errors, 0 CRC, 0 frame, 0 ignored
0 runts, 0 giants
5067 packets output, 330420 bytes, 0 underruns
Transmitted 90 broadcasts, 4977 multicasts, 0 unicasts
0 output errors, 0 collisions
```

Displaying the recovery state for all conditions

Use the **show errdisable recovery** command to display all the default error disable recovery state for all possible conditions. In this example, port 6 is undergoing a recovery.

```
device# show errdisable recovery
ErrDisable Reason Timer Status
-------------------------------------
all reason Disabled
bpduguard Enabled
Timeout Value: 300 seconds
Interface that will be enabled at the next timeout:
Interface Errdisable reason Time left (sec)
------------- ----------------- ---------------
Port 1/2/3 bpduguard 297
```

Displaying the recovery state by port number and cause

To see which ports are under an errdisabled state, use the **show errdisable summary** command. This command not only shows the port number, but also displays the reason why the port is in an errdisable state and the method used to recover the port. In this example, port 1/2/6 is errdisabled for a BPDU guard violation.

```
device# show errdisable summary
Port 1/2/6 ERR_DiSABLED for bpduguard
```

Errdisable Syslog messages

When the system places a port into an errdisabled state for BPDU guard, a log message is generated. When the errdisable recovery timer expires, a log message is also generated.

A Syslog message such as the following is generated after a port is placed into an errdisable state for BPDU guard.

```
STP: VLAN 50 BPDU-guard port 1/6/3 detect (Received BPDU), putting into err-disable state
```

A Syslog message such as the following is generated after the recovery timer expires.

```
ERR_DISABLE: Interface ethernet 1/6/3, err-disable recovery timeout
```

802.1s Multiple Spanning Tree Protocol

Multiple Spanning Tree Protocol (MSTP), as defined in IEEE 802.1s, allows multiple VLANs to be managed by a single STP instance and supports per-VLAN STP. As a result, several VLANs can be mapped to a reduced number of spanning-tree instances. This ensures loop-free topology for one or more VLANs that have the similar layer-2 topology. The RUCKUS implementation supports up to 16 spanning tree instances in an MSTP enabled bridge which means that it can support up to 16 different Layer 2 topologies. The spanning tree algorithm used by MSTP is RSTP which provides quick convergence.

Multiple spanning-tree regions

Using MSTP, the entire network runs a common instance of RSTP. Within that common instance, one or more VLANs can be individually configured into distinct regions. The entire network runs the common spanning tree instance (CST) and the regions run a local instance. The local instance is known as Internal Spanning Tree (IST). The CST treats each instance of IST as a single bridge. Consequently, ports are blocked to prevent loops that might occur within an IST and also throughout the CST. With the exception of the provisions for multiple instances, MSTP operates exactly like RSTP.

For example, in Figure 79 a network is configured with two regions: Region 1 and Region 2. The entire network is running an instance of CST. Each of the regions is running an instance of IST. In addition, this network contains Switch 1 running MSTP that is not configured in a region and consequently is running in the CIST instance. In this configuration, the regions are each regarded as a single bridge to the rest of the network, as is Switch 1. The CST prevents loops from occurring across the network. Consequently, a port is blocked at port 1/1/2 of switch 4.

Additionally, loops must be prevented in each of the IST instances. Within the IST Region 1, a port is blocked at port 1/1/2 of switch 4 to prevent a loop in that region. Within Region 2, a port is blocked at port 1/3/2 of switch 3 to prevent a loop in that region.

FIGURE 79 MSTP configured network

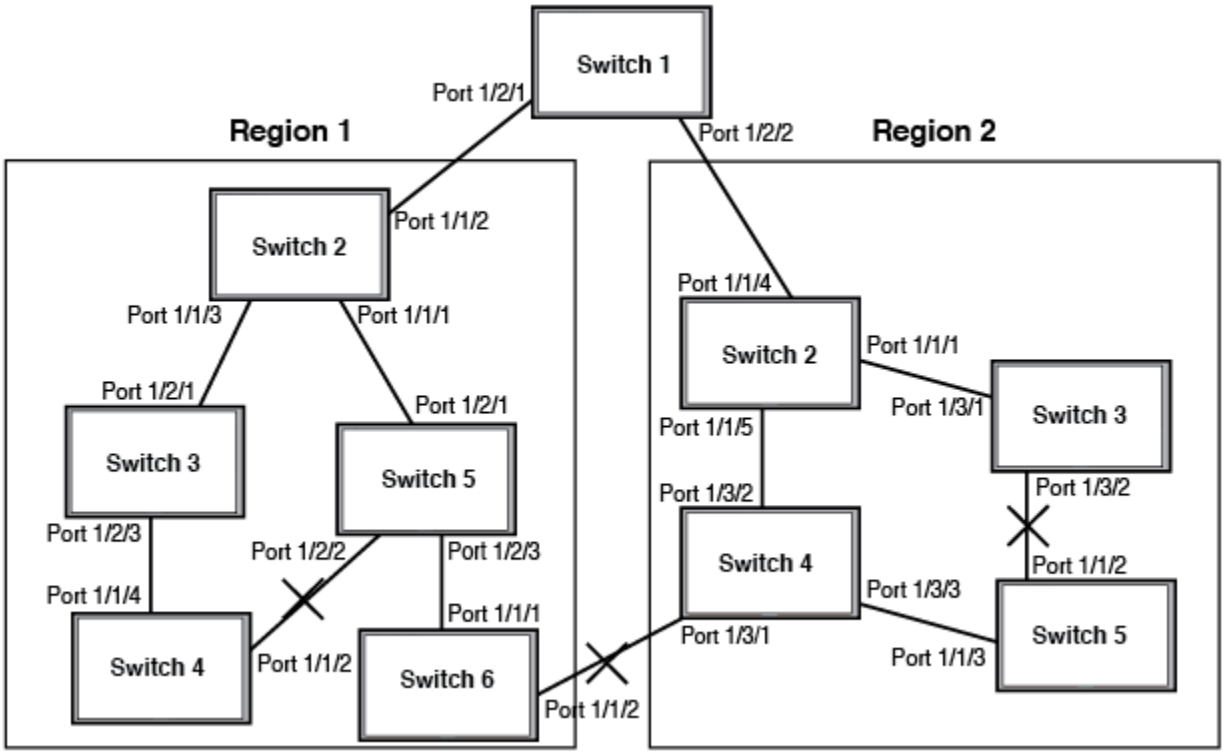

The following definitions describe the STP instances that define an MSTP configuration.

Common Spanning (CST) - CST is defined in 802.1q and assumes one spanning-tree instance for the entire bridged network regardless of the number of VLANs. In MSTP, an MSTP region appears as a virtual bridge that runs CST.

Internal Spanning Tree (IST) - IST is a new terminology introduced in 802.1s. An MSTP bridge must handle at least these two instances: one IST and one or more MSTIs (Multiple Spanning Tree Instances). Within each MST region, the MSTP maintains multiple spanning-tree instances. Instance 0 is a special instance known as IST, which extends CST inside the MST region. IST always exists if the switch runs MSTP. Besides IST, this implementation supports up to 15 MSTIs, numbered from 1 to 4094.

Common and Internal Spanning Trees (CIST) - CIST is a collection of the ISTs in each MST region and the CST that interconnects the MST regions and single spanning trees.

Multiple Spanning Tree Instance (MSTI) - The MSTI is identified by an MST identifier (MSTid) value between 1 and 4094.

MSTP Region - These are clusters of bridges that run multiple instances of the MSTP protocol. Multiple bridges detect that they are in the same region by exchanging their configuration (instance to VLAN mapping), name, and revision-level. Therefore, if you need to have two bridges in the same region, the two bridges must have identical configurations, names, and revision-levels. Also, one or more VLANs can be mapped to one MSTP instance (IST or MSTI) but a VLAN cannot be mapped to multiple MSTP instances.

> **NOTE**
> One or more VLANs can be mapped to one MSTP instance (IST or MSTI) but a VLAN cannot be mapped to multiple MSTP instances.

Configuration notes

When configuring MSTP, note the following:

- With MSTP running, enabling static trunk on ports that are members of many VLANs (4000 or more VLANs) will keep the system busy for 20 to 25 seconds.
- PVST BPDUs are tunnelled through 802.1s regions.

Configuring MSTP mode and scope

With the introduction of MSTP, a system can be either under MSTP mode or not under MSTP mode. The default state is to not be under MSTP mode. MSTP configuration can only be performed in a system under MSTP mode.

With a system configured under MSTP mode, there is a concept called MSTP scope. MSTP scope defines the VLANs that are under direct MSTP control. You cannot run 802.1D or 802.1w on any VLAN (even outside of MSTP scope) and you cannot create topology groups when a system is under MSTP mode. While a VLAN group will still be supported when a system is under MSTP mode, the member VLAN should either be all in the MSTP scope or all out of the MSTP scope.

When a system is configured from non-MSTP mode to MSTP mode, the following changes are made to the system configuration:

- All 802.1D and 802.1w STP instances are deleted regardless of whether the VLAN is inside the MSTP scope or not.
- All topology groups are deleted.
- Any VSRP configuration is deleted.
- Single-span (if configured) is deleted.
- MRP running on a VLAN inside MSTP scope is deleted.
- The common and internal spanning trees (CIST) collection is created and all VLANS inside the MSTP scope are attached with the CIST.

Make sure that no physical Layer 2 loops exist prior to switching from non-MSTP mode to MSTP mode. If, for example, you have a Layer 2 loop topology configured as a redundancy mechanism before you perform the switch, a Layer 2 storm should be expected.

To configure a system into MSTP mode, use the following command at the Global Configuration level.

```
device(config)# mstp scope all
```

NOTE
When the **mstp scope all** command is issued, the ports associated to VLANs in which any STP is configured transition to the blocking state. You must enter the **mstp start** command to re-converge the ports, VLANs, and VEs.

Once the system is configured into MSTP mode, CIST (sometimes referred to as “instance 0”) is created and all existing VLANs inside the MSTP scope are controlled by CIST. In addition, whenever you create a new VLAN inside MSTP scope, it is put under CIST control by default. In the RUCKUS ICX MSTP implementation however, a VLAN ID can be pre-mapped to another MSTI as described in the “Configuring an MSTP instance” section. A VLAN whose ID is pre-mapped, will attach to the specified MSTI instead of to the CIST when created.

NOTE
Once under MSTP mode, CIST always controls all ports in the system. If you do not want a port to run MSTP, configure the **no spanning-tree** command under the specified interface configuration.

Configuring **no spanning-tree** command on a system that is configured for MSTP mode changes the system to non-MSTP mode. When this switch is made, all MSTP instances are deleted together with all MSTP configurations. ALL VLANs inside the original MSTP scope will not run any Layer 2 protocols after the switch.

Reduced occurrences of MSTP reconvergence

When a VLAN is deleted, the RUCKUS device retains the associated VLAN to MSTI mapping instead of deleting it from the configuration. This way, a VLAN can be pre-mapped to an MSTI and MSTP reconvergence may not be necessary when a VLAN is added to or deleted from the configuration. As long as the VLAN being created or deleted is pre-mapped to an MSTI, and the VLAN to MSTI mapping has not changed, MSTP reconvergence will not occur.

NOTE
MSTP reconvergence occurs when the VLAN to MSTI mapping is changed using the **mstp instance** command.

You can optionally remove VLAN to MSTI mappings from the configuration. Refer to Deleting a VLAN to MSTI mapping on page 230.

The following shows an example application.

Example application of MSTP reconvergence

The following example shows the running configuration file before and after deleting a VLAN from the configuration. The VLAN to MSTI mapping is retained in the running configuration, even after the VLAN is deleted.

```
device(config-vlan-20)#show run

Current configuration:
!
ver 04.2.00bT3e1
!
!
vlan 1 name DEFAULT-VLAN by port
 no spanning-tree
!
vlan 10 by port
 tagged ethe 1/1/1 to 1/1/2
 no spanning tree
!
vlan 20 by port                        <----- VLAN 20 configuration

 tagged ethe 1/1/1 to 1/1/2
 no spanning-tree
!
mstp scope all
mstp instance 0 vlan 1
mstp instance 1 vlan 20
```

```
mstp start
some lines omitted for brevity...
device(config-vlan-20)#no vlan 20   <----- VLAN 20 deleted
device(config-vlan-20)#show run

Current configuration:
!
ver 04.2.00bT3e1
!
!
vlan 1 name DEFAULT-VLAN by port
 no spanning-tree
!
vlan 10 by port
 tagged ethe 1/1/1 to 1/1/2
 no spanning-tree
!
mstp scope all
mstp instance 0 vlan 1
mstp instance 1 vlan 10
mstp instance 1 vlan 20               <----- VLAN to MSTI mapping kept in
mstp start                                   running configuration, even though
                                             VLAN 20 was deleted

some lines omitted for brevity...
```

Deleting a VLAN to MSTI mapping

You can optionally remove a VLAN to MSTI mapping using the **no mstp instance** command. To do so, enter a command such as the following.

```
device(config)# no mstp instance 7 vlan 4 to 7
```

This command deletes the VLAN to MSTI mapping from the running configuration and triggers an MSTP reconvergence.

Viewing the MSTP configuration digest

The MSTP Configuration Digest indicates the occurrence of an MSTP reconvergence. The Configuration Digest is recalculated whenever an MSTP reconvergence occurs. To view the Configuration Digest, use the **show mstp config** command. The following shows an example output.

```
device(config-vlan-20)# show mstp config
MSTP CONFIGURATION
------------------
Scope         : all system
Name          :
Revision      : 0
Version       : 3 (MSTP mode)
Config Digest: 0x9bbda9c70d91f633e1e145fbcbf8d321
Status    : Started
Instance VLANs
-------- ----------------------------------------------------
0        1
1        10 20
```

Configuring additional MSTP parameters

To configure a switch for MSTP, you could configure the name and the revision on each switch that is being configured for MSTP. You must then create an MSTP Instance and assign an ID. VLANs are then assigned to MSTP instances. These instances must be configured on all switches that interoperate with the same VLAN assignments. Port cost, priority and global parameters can then be configured for individual ports and instances. In addition, operational edge ports and point-to-point links can be created and MSTP can be disabled on individual ports.

Each of the commands used to configure and operate MSTP are described in the following:

- Setting the MSTP name on page 231

- Setting the MSTP revision number on page 231
- Configuring an MSTP instance on page 231
- Configuring bridge priority for an MSTP instance on page 231
- Setting the MSTP global parameters on page 232
- Setting ports to be operational edge ports on page 232
- Setting automatic operational edge ports on page 232
- Setting point-to-point link on page 232
- Disabling MSTP on a port on page 234
- Forcing ports to transmit an MSTP BPDU on page 235
- Forcing ports to transmit an MSTP BPDU on page 235

Setting the MSTP name

Each switch that is running MSTP is configured with a name. It applies to the switch which can have many different VLANs that can belong to many different MSTP regions.

To configure an MSTP name, use a command such as the following at the Global Configuration level.

```
device(config)# mstp name RUCKUS
```

Setting the MSTP revision number

Each switch that is running MSTP is configured with a revision number. It applies to the switch which can have many different VLANs that can belong to many different MSTP regions.

To configure an MSTP revision number, use a command such as the following at the Global Configuration level.

```
device(config)# mstp revision 4
```

Configuring an MSTP instance

An MSTP instance is configured with an MSTP ID for each region. Each region can contain one or more VLANs. The RUCKUS implementation of MSTP allows you to assign VLANS or ranges of VLANs to an MSTP instance before or after they have been defined. If pre-defined, a VLAN will be placed in the MSTI that it was assigned to immediately when the VLAN is created. Otherwise, the default operation is to condition of assign all new VLANs to the CIST. VLANs assigned to the CIST by default can be moved later to a specified MSTI.

To configure an MSTP instance and map one or more VLANs to that MSTI, use a command such as the following at the Global Configuration level.

```
device(config)# mstp instance 7 vlan 4 to 7
```

NOTE
The system does not allow an MSTI without any VLANs mapped to it. Consequently, removing all VLANs from an MSTI, deletes the MSTI from the system. The CIST by contrast will exist regardless of whether or not any VLANs are assigned to it or not. Consequently, if all VLANs are moved out of a CIST, the CIST will still exist and functional.

Configuring bridge priority for an MSTP instance

Priority can be configured for a specified instance. To configure priority for an MSTP instance, use a command such as the following at the Global Configuration level.

```
device(config)# mstp instance 1 priority 8192
```

You can set a **priority** to the instance that gives it forwarding preference over lower priority instances within a VLAN or on the switch. A higher number for the priority variable means a lower forwarding priority.

Setting the MSTP global parameters

MSTP has many of the options available in RSTP as well as some unique options. To configure MSTP Global parameters for all instances on a switch.

```
device(config)# mstp force-version 0 forward-delay 10 hello-time 4 max-age 12 max-hops 9
```

Setting ports to be operational edge ports

You can define specific ports as edge ports for the region in which they are configured to connect to devices (such as a host) that are not running STP, RSTP, or MSTP. If a port is connected to an end device such as a PC, the port can be configured as an edge port. To configure ports as operational edge ports enter a command such as the following.

```
device(config)# mstp admin-edge-port ethernet 3/1/1
```

Setting automatic operational edge ports

You can configure a Layer 3 switch to automatically set a port as an operational edge port if the port does not receive any BPDUs since link-up. If the port receives a BPDU later, it is automatically reset to become an operational non-edge port. This feature is set globally to apply to all ports on a router where it is configured. This feature is configured as shown in the following.

```
device(config)# mstp edge-port-auto-detect
```

NOTE
If this feature is enabled, it takes the port about 3 seconds longer to come to the enable state.

Setting point-to-point link

You can set a point-to-point link between ports to increase the speed of convergence. To create a point-to-point link between ports, use a command such as the following at the Global Configuration level.

```
device(config)# mstp admin-pt2pt-mac ethernet 1/2/5 ethernet 1/4/5
```

MSTP+ overview

The MSTP+ feature allows you to selectively include VLANs in the MSTP scope.

In the standard IEEE 802.1s MSTP all VLANs are automatically placed under CIST control so that the entire switch is controlled by the MSTP. The MSTP+ feature is an enhancement that allows you to exclude one or more VLANs from the MSTP scope and configure them in a non-MSTP topology. These VLANs are considered free VLANs and can run any Layer 2 protocols such as PVST/PVRST, MRP, VSRP, or any pure Layer 3 protocols.

You must ensure all the connected devices are properly configured, create the MSTP instances, and assign the VLANs to those instances. These instances must be configured on all devices that interoperate with the same VLAN assignments.

NOTE
In a system running MSTP+, the point-to-point links in the VLAN that wants to run per-vlan STP/RSTP should always be ‘tagged’. Only edge-ports can be ‘untagged’ in that VLAN.

The following table lists the protocols that can run under free VLANs along with the MSTP+.

Protocol	Compatible with MSTP+
Spanning tree single (802.1D)	No

Rapid spanning tree single (802.1w)	No
MCT	No
Per-VLAN spanning tree (STP, RSTP)	Yes
VSRP	Yes
MRP	Yes
All Layer 3 protocols (pure Layer 3 network)	Yes

This means that you can create an independent Layer 3 topology even when on a switch that is configured with MSTP. The MSTP convergence does not affect the Layer 3 topology.

You can switch between non-MSTP, MSTP, and MSTP+ modes.

NOTE
Systems configured with MSTP+ may not interoperate properly with the systems on which standard MSTP is configured. It is recommended that you configure MSTP+ on both sides.

NOTE
Free VLANs must have their own means to break Layer 2 loops; MSTP+ cannot be relied on to do so.

Configuring MSTP+

Use the **mstp scope** command with the **pvst** keyword to configure MSTP+.

MSTP+ is not operational until you configure at least one MSTP instance and configure the **mstp start** command. You can create MSTP+ instances the same way you configure MSTP instances. See the “Configuring an MSTP instance” section for information on configuring MSTP.

1. Configure MSTP+.

```
Device(config)# mstp scope pvst
Enabling MSTP+ scope. MSTP instances need to be configured and 'mstp start'
need to be entered in order to activate this MSTP+ feature
```

   Configures MSTP+. CIST is not automatically created and VLANs are not under MSTP scope unless you explicitly configure the MSTP instances and attach the VLANs to them.

2. Create an MSTP instance.

```
Device(config)# mstp instance 1 vlan 4 to 7
```

   Creates an MSTP instance on VLANs 4 to 7.

3. Start the MSTP+ protocol.

```
Device(config)# mstp start
```

   Creates an MSTP instance on VLANs 4 to 7.

4. Remove the MSTP+ configuration.

```
Device(config)# no mstp scope pvst
```

   Removes the MSTP+ configuration. The VLANs that were attached to MSTP+ are out of MSTP+ scope and there is no PVST under those VLANs. The non-MSTP VLANs are not affected.

Switching between non-MSTP, MSTP, and MSTP+ modes

Use the **mstp scope** command to switch between non-MSTP, MSTP, and MSTP+ modes. This allows you to move between modes without explicitly removing the current mode and reconfiguring the new mode.

When an MSTP instance is enabled, you can configure the **pvst** and **all** keywords to switch between modes.

1. When the **mstp scope all** command is configured and MSTP mode is active, change to MSTP+ mode.

   ```
   Device(config)# mstp scope pvst
   ```

   The mode is changed to MSTP+. You can remove the VLANs from MSTP+ instances. VLANs that are removed from MSTP+ scope become free and other supported protocols can be configured.
2. When the **mstp scope pvst** command is configured and MSTP+ mode is active, change to MSTP mode.

   ```
   Device(config)# mstp scope all
   ```

   The mode is changed to MSTP. The VLANs that are already attached to MSTP+ are kept as is and all the free VLANs are attached to a CIST instance. Any protocols configured under the free VLANs are removed.

Disabling MSTP on a port

To disable MSTP on a specific port, use a command such as the following at the Global Configuration level.

```
device(config)# mstp disable ethernet 2/1/1
```

When a port is disabled for MSTP, it behaves as blocking for all the VLAN traffic that is controlled by MSTIs and the CIST.

Changing MSTP port parameters

The path cost for a port comes from the speed of that port if there is no path cost configuration.

If you do not want the link speed to influence the path cost and affect the network topology, then configure the path cost for the port. You can configure a single port, multiple port, or a port range.

1. Enter the following command in global configuration mode level to configure a system into MSTP mode.

   ```
   device(config)# mstp scope all
   ```
2. Enter a command such as the following to configure the path cost configuration and the priority together.

   ```
   device(config)# mstp instance 0 ethernet 1/1/4 ethernet 1/1/5 ethernet 1/1/15 to 1/1/17 path-cost
   20000 priority 192
   ```

   You can configure path cost and priority separately.
3. Enter the following command to enable MSTP in global configuration mode level.

   ```
   device(config)# mstp start
   ```
4. Verify the running configuration.

   ```
   device(config)# show run | include mstp

   mstp scope all
   mstp instance 0 vlan 1
   mstp instance 0 ethe 1/1/4 to 1/1/5 ethe 1/1/15 to 1/1/17 path-cost 20000
   mstp instance 0 ethe 1/1/4 to 1/1/5 ethe 1/1/15 to 1/1/17 priority 64
   mstp start
   ```

Forcing ports to transmit an MSTP BPDU

To force a port to transmit an MSTP BPDU, use a command such as the following at the Global configuration mode.

```
device(config)# mstp force-migration-check ethernet 3/1/1
```

Enabling MSTP on a device

You must enable MSTP on the device.

MSTP scope must be enabled on the switch as described in Configuring MSTP mode and scope on page 228 before MSTP can be enabled.

To enable MSTP on your switch, use the following at the Global Configuration level.

```
device(config)# mstp start
```

Examples of an MSTP configuration

In the following figure, four RUCKUS device routers are configured in two regions. There are four VLANs in four instances in Region 2. Region 1 is in the CIST.

FIGURE 80 Sample MSTP configuration

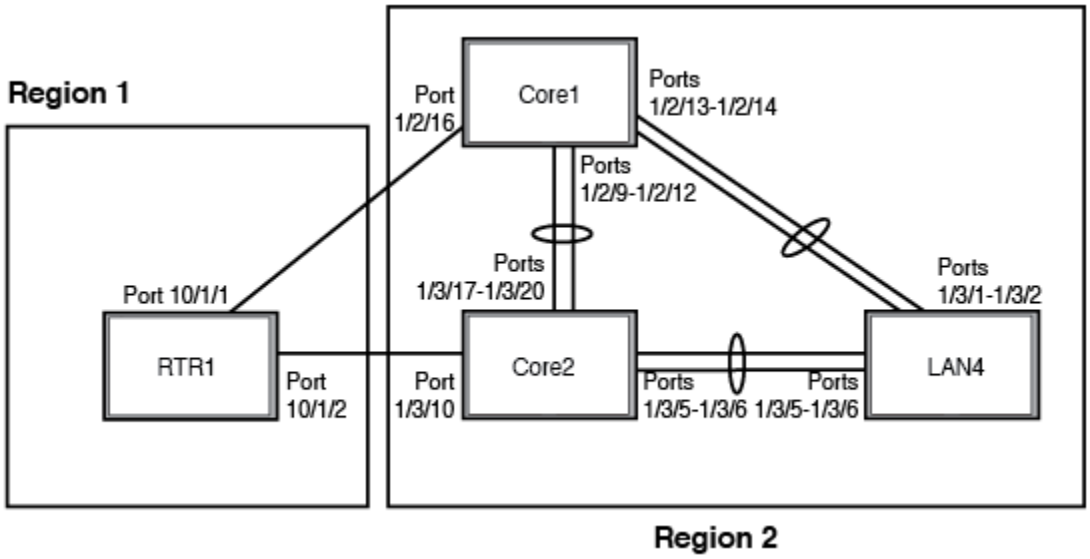

RTR1 on MSTP configuration

```
device(config-vlan-4093)# tagged ethernet 10/1/1 to 10/1/2
device(config-vlan-4093)# exit
device(config)# mstp scope all
device(config)# mstp name Reg1
device(config)# mstp revision 1
device(config)# mstp admin-pt2pt-mac ethernet 10/1/1 to 10/1/2
device(config)# mstp start
device(config)# hostname RTR1
```

Core 1 on MSTP configuration

```
device(config)# trunk ethernet 1/2/9 to 1/2/12 ethernet 1/2/13 to 1/2/14
device(config-vlan-1)# name DEFAULT-VLAN by port
device(config-vlan-1)# exit
```

```
device(config)# vlan 20 by port
device(config-vlan-20)# tagged ethernet 1/2/9 to 1/2/14 ethernet 1/2/16
device(config-vlan-20)# exit
device(config)# vlan 21 by port
device(config-vlan-21)# tagged ethernet 1/2/9 to 1/2/14 ethernet 1/2/16
device(config-vlan-21)# exit
device(config)# vlan 22 by port
device(config-vlan-22)# tagged ethernet 1/2/9 to 1/2/14 ethernet 1/2/16
device(config-vlan-22)# exit
device(config)# vlan 23 by port
device(config)# mstp scope all
device(config)# mstp name HR
device(config)# mstp revision 2
device(config)# mstp instance 20 vlan 20
device(config)# mstp instance 21 vlan 21
device(config)# mstp instance 22 vlan 22
device(config)# mstp instance 0 priority 8192
device(config)# mstp admin-pt2pt-mac ethernet 1/2/9 to 1/2/14
device(config)# mstp admin-pt2pt-mac ethernet 1/2/16
device(config)# mstp disable ethernet 2/240.
device(config)# mstp start
device(config)# hostname CORE1
```

Core2 on MSTP configuration

```
device(config)# trunk ethernet 1/3/5 to 1/3/6 ethernet 1/3/17 to 1/3/20
device(config)# vlan 1 name DEFAULT-VLAN by port
device(config-vlan-1)# exit
device(config)# vlan 20 by port
device(config-vlan-20)# tagged ethernet 1/3/5 to 1/3/6 ethernet 1/3/17 to 1/3/20
device(config-vlan-20)# exit
device(config)# vlan 21 by port
device(config-vlan-21)# tagged ethernet 1/3/5 to 1/3/6 ethernet 1/3/17 to 1/3/20
device(config-vlan-21)# exit
device(config)# vlan 22 by port
device(config-vlan-22)# tagged ethernet 1/3/5 to 1/3/6 ethernet 1/3/17 to 1/3/20
device(config-vlan-22)# exit
device(config)# mstp scope all
device(config)# mstp name HR
device(config)# mstp revision 2
device(config)# mstp instance 20 vlan 20
device(config)# mstp instance 21 vlan 21
device(config)# mstp instance 22 vlan 22
device(config)# mstp admin-pt2pt-mac ethernet 1/3/17 to 1/3/20 ethernet 1/3/5 to 1/3/6
device(config)# mstp admin-pt2pt-mac ethernet 1/3/10
device(config)# mstp disable ethernet 1/3/7 ethernet 1/3/24
device(config)# mstp start
device(config)# hostname CORE2
```

LAN 4 on MSTP configuration

```
device(config)# trunk ethernet 1/3/5 to 1/3/6 ethernet 3/1/1 to 3/1/2
device(config)# vlan 1 name DEFAULT-VLAN by port
device(config-vlan-1)# exit
device(config)# vlan 20 by port
device(config-vlan-20)# tagged ethernet 3/1/1 to 3/1/2 ethernet 3/1/5 to 3/1/6
device(config)# exit
device(config)# vlan 21 by port
device(config-vlan-21)# tagged ethernet 3/1/1 to 3/1/2 ethernet 3/1/5 to 3/1/6
device(config-vlan-21)# exit
device(config)# vlan 22 by port
device(config-vlan-22)# tagged ethernet 3/1/1 to 3/1/2 ethernet 3/1/5 to 3/1/6
device(config)# mstp scope all
device(config)# mstp config name HR
device(config)# mstp revision 2
device(config)# mstp instance 20 vlan 20
device(config)# mstp instance 21 vlan 21
device(config)# mstp instance 22 vlan 22
```

```
device(config)# mstp admin-pt2pt-mac ethernet 3/1/5 to 3/1/6 ethernet 3/1/1 to 3/1/2
device(config)# mstp start
device(config)# hostname LAN4
```

Displaying MSTP statistics

MSTP statistics can be displayed using the commands shown below.

To display all general MSTP information, enter the following command.

```
device# show mstp
MSTP Instance 0 (CIST) - VLANs: 1
--------------------------------------------------------------------------------
Bridge           Bridge Bridge Bridge Bridge Root   Root  Root   Root
Identifier       MaxAge Hello  FwdDly Hop    MaxAge Hello FwdDly Hop
hex              sec    sec    sec    cnt    sec    sec   sec    cnt
8000000cdb80af01 20     2      15     20     20     2     15     19
Root             ExtPath   RegionalRoot     IntPath   Designated       Root
Bridge           Cost      Bridge           Cost      Bridge           Port
hex                        hex                        hex
8000000480bb9876 2000      8000000cdb80af01 0         8000000480bb9876 3/1/1
Port  Pri PortPath  P2P Edge Role       State      Designa-  Designated
Num       Cost      Mac Port                      ted cost  bridge
3/1/1   128 2000      T   F    ROOT       FORWARDING 0         8000000480bb9876
MSTP Instance 1 - VLANs: 2
--------------------------------------------------------------------------------
Bridge           Max RegionalRoot     IntPath   Designated       Root  Root
Identifier       Hop Bridge           Cost      Bridge           Port  Hop
hex              cnt hex                        hex                    cnt
8001000cdb80af01 20  8001000cdb80af01 0         8001000cdb80af01 Root  20
Port  Pri PortPath  Role       State      Designa-  Designated
Num       Cost                          ted cost  bridge
3/1/1   128 2000      MASTER     FORWARDING 0         8001000cdb80af01
```

Displaying MSTP information for a specified instance

The following example displays MSTP information specified for an MSTP instance.

```
device# show mstp 1
MSTP Instance 1 - VLANs: 2
--------------------------------------------------------------------------------
Bridge           Max RegionalRoot     IntPath   Designated       Root  Root
Identifier       Hop Bridge           Cost      Bridge           Port  Hop
hex              cnt hex                        hex                    cnt
8001000cdb80af01 20  8001000cdb80af01 0         8001000cdb80af01 Root  20
Port    Pri    PortPath  Role       State       Designa-    Designated
Num            Cost                           ted cost    bridge
1/3/1   128    2000      MASTER     FORWARDING  0           8001000cdb80af01
```

Displaying MSTP information for CIST instance 0

Instance 0 is the Common and Internal Spanning Tree Instance (CIST). When you display information for this instance there are some differences with displaying other instances. The following example displays MSTP information for CIST Instance 0.

```
device# show mstp 0
MSTP Instance 0 (CIST) - VLANs: 1
--------------------------------------------------------------------------------
Bridge           Bridge Bridge Bridge Bridge Root   Root  Root   Root
Identifier       MaxAge Hello  FwdDly Hop    MaxAge Hello FwdDly Hop
hex              sec    sec    sec    cnt    sec    sec   sec    cnt
8000000cdb80af01 20     2      15     20     20     2     15     19
Root             ExtPath   RegionalRoot     IntPath   Designated       Root
Bridge           Cost      Bridge           Cost      Bridge           Port
hex                        hex                        hex
8000000480bb9876 2000      8000000cdb80af01 0         8000000480bb9876 3/1/1
Port    Pri PortPath  P2P Edge Role       State      Designa-  Designated
```

```
Num         Cost      Mac Port                      ted cost  bridge
3/1/1   128 2000      T   F    ROOT       FORWARDING 0         8000000480bb9876
```

To display details about the MSTP configuration, enter the following command.

```
device# show mstp conf
MSTP CONFIGURATION
------------------
Name     : Reg1
Revision : 1
Version  : 3 (MSTP mode)
Status   : Started
Instance VLANs
-------- ----------------------------------------------------
0        4093
```

To display details about the MSTP that is configured on the device, enter the following command.

```
device# show mstp detail
MSTP Instance 0 (CIST) - VLANs: 4093
-------------------------------------------------------------------------------
Bridge: 800000b000c00000 [Priority 32768, SysId 0, Mac 00b000c00000]
FwdDelay 15, HelloTime 2, MaxHops 20, TxHoldCount 6
Port 1/1/4 - Role: DESIGNATED - State: FORWARDING
PathCost 20000, Priority 128, OperEdge T, OperPt2PtMac F, Boundary T
Designated - Root 800000b000c00000, RegionalRoot 800000b000c00000,
Bridge 800000b000c00000, ExtCost 0, IntCost 0
ActiveTimers - helloWhen 1
MachineState - PRX-DISCARD, PTX-IDLE, PPM-SENDING_RSTP, PIM-CURRENT
PRT-ACTIVE_PORT, PST-FORWARDING, TCM-INACTIVE
BPDUs - Rcvd MST 0, RST 0, Config 0, TCN 0
Sent MST 6, RST 0, Config 0, TCN 0
```

MSTP root guard

Root guard is supported for MSTP at the port level, to ensure that the port is in the designated state all the time. The timeout value for root protection is user-configurable.

> **NOTE**
> For details of root guard, see Root guard on page 222.

The MSTP root guard feature ensures that the port on which root guard is enabled is the designated port. A MSTP BPDU normally contains multiple instances of information, including CIST and any MSTIs of which the sending port is member. If an MSTP BPDU is received on a root-guard-enabled port with either CIST or any MSTI information considered to be "superior," the switch puts that port in a "root inconsistent" STP state in that CIST or MSTI instance, which is effectively equal to a discarding state in 802.1S, to make sure that no traffic is forwarded across this port in that CIST or MSTI instance.

For example, root-guard-configured port 1/1/5 belongs to CIST, MSTI 1, 3, 5, 6. If the MSTP BPDU received by port 1/1/5 has superior information for CIST and MSTI 5, 6 but inferior information for MSTI 1, 3, the port 1/1/5 is put into "root inconsistent" state in CIST and MSTI 5, 6.

The recovery from the root-inconsistent state is made automatic through the MSTP root guard timer, which is a per-port per MSTP instance timer. The timeout value for this timer can be configured globally. If the configured MSTP root guard timeout is 60 seconds, any superior information received on the port for an MSTP instance ensures that the port stays in the root-inconsistent state and resets the timer back to 60 seconds. If no superior information is received on that port during that interval, the port is put into the root-consistent state (the normal state) for that MSTP instance. This triggers the entire port to re-initialize (the port is re-initialize in all MSTP instances of which that port is member, including CIST and any MSTIs of which the port is a member).

Regarding previous root guard support for 802.1D/802.1W, when root guard is configured on a root port/alternate/backup port, the port is put into the designated blocking state immediately. The MSTP root guard operates differently. It depends on the next superior BPDU to bring the port into the root-inconsistent state. Until that time, the port may still be in the alternative/root/backup role.

When the system moves a port into or out of the root-inconsistent state, a syslog message is generated as in the following example. The log message format is the same for both 802.1D and 802.1W.

```
 0d00h14m50s:I:MSTP: Root-protect port 3/1/5, MSTP Index 16 (CIST) inconsistent (Received superior BPDU)

0d00h14m35s:I:MSTP: Root-protect port 3/1/5, MSTP index 16 (CIST) consistent (Timeout)
```

NOTE
This feature works on the switch that locally enabled MSTP. If only have 802.1D/802.1W is enabled on the device, even sending MSTP BPDUs with bridge ID 0 does not trigger anything.

Do the following to enable MSTP root guard.

- Use the **spanning-tree root-protect** command to enable MSTP root guard on an interface. This command is used to set the port on root guard for all spanning tree protocols.
- Use the global **mstp root-protect timeout** command to configure root protection timeout value for MSTP root guard.
- Use the **show mstp root-protect** command to verify the configuration.

Enabling MSTP root guard on a port

To enable MSTP root guard on a port, use the **spanning-tree root-protect** command on the interface as in the following example.

```
device# configure terminal
dcevice(config)# interface ethernet 1/1/5
device(config-if-e10000-1/1/5)# spanning-tree root-protect
```

Setting MSTP root guard timeout value

To configure root protection timeout value for MSTP root guard at the global level, use the **mstp root-protect timeout** command as in the following example.

```
device# configure terminal
device(config)# mstp root-protect timeout 60
```

Disabling MSTP root guard on a port

To disable MSTP root guard on the port, use the **no spanning-tree root-protect** command on the interface as in the following example.

```
device# configure terminal
dcevice(config)# interface ethernet 1/1/5
device(config-if-e10000-1/1/5)# no spanning-tree root-protect
```

Verifying the MSTP root guard configuration

To verify the MSTP root guard configuration, use the **show mstp** command as in the following examples. A root-inconsistent port is indicated by **RT-INCO**.

```
device# show mstp
MSTP Instance 0 (CIST) - VLANs:
1
--------------------------------------------------------------------------------
Bridge           Bridge Bridge Bridge Bridge Root   Root  Root   Root
Identifier       MaxAge Hello  FwdDly Hop    MaxAge Hello FwdDly Hop
hex              sec    sec    sec    cnt    sec    sec   sec    cnt
200000000000000a 20     2      15     20     20     2     15     20

Root             ExtPath   RegionalRoot     IntPath   Designated       Root
Bridge           Cost      Bridge           Cost      Bridge           Port
hex                        hex                        hex
200000000000000a 0         200000000000000a 0         200000000000000a Root

Port      Pri Port  PortPath  P2P Edge Role      State   Designa-  Designated
Num           Id    Cost      Mac Port                   ted cost  bridge
1/1/5     128 193   1400      F   F    DESIGNATE RT-INCO 0         200000000000000a

MSTP Instance 1 - VLANs:
20
--------------------------------------------------------------------------------
Bridge           Max RegionalRoot     IntPath   Designated       Root      Root
Identifier       Hop Bridge           Cost      Bridge           Port      Hop
hex              cnt hex                        hex                        cnt
200100000000000a 20  200100000000000a 0         200100000000000a Root      20

Port      Pri Port  PortPath  Role      State   Designa-  Designated
Num           Id    Cost                      ted cost  bridge
1/1/5     128 193   1400      DESIGNATE FORWARD 0         200100000000000a

1/1/5   CIST     Inconsistent state (59 seconds left on timer)
```

To verify whether MSTP instances are in consistent state or in Inconsistent state, use the **show mstp root-protect** command.

```
device# show mstp root-protect
Port    MSTI     Current State
1/1/5    MSTI 1 Consistent state

1/1/5   CIST     Inconsistent state (59 seconds left on timer)
```

xSTP Syslog for BPDU Threshold

The xSTP syslog messages for BPDUs are created when CPU utilization is more than the ISSU threshold value and also, when the system receives more than a certain amount of xSTP BPDUs.

If the received xSTP BPDU count goes higher than a threshold value and also, if the CPU utilization is higher, we will log the syslog. Later, when this condition gets cleared, another syslog message is generated. These syslog messages are not generated immediately after the control bridge is UP. The system will wait for some time to reach the steady state before creating the syslog.

Syslog messages for xSTP are logged into the system to inform that the CPU utilization rate is higher than the normal value and the BPDU processing rate for a minute is higher than the threshold limit. Scalability can be a challenge for Campus Fabric (SPX) system having thousands of ports. Syslog messages are generated depending upon the received STP or PVST BPDUs. If the CPU utilization exceeds a threshold value, ISSU cannot be performed on a Campus Fabric (SPX system. Even if xSTP is not enabled, the system may still receive xSTP BPDUs and these BPDUs are forwarded to other ports in the system.

Syslog messages are also created when a switch gets connected to Campus Fabric (SPX) system through a Port Extender. If the BPDU received from a switch has a Bridge ID that belongs to another switch, a syslog is created to indicate the presence of a switch on the Port Extender port. Also, if no other BPDU messages are received within the next minute, a corresponding clear syslog will be generated. Based on the Campus Fabric (SPX) scale setup, the high threshold value is 1000 BPDUs per second and the low threshold will be 10% less than the high threshold. But, if the low threshold is

reached, a clear condition syslog is created. The xSTP syslog messages will be logged in again if the high threshold and the CPU rate condition reappears. The following are some of the examples of syslog messages.

The syslog message for BPDU threshold crossing and clearing looks like the following:

SYSLOG: <#> xSTP BPDU Threshold (1000 pps) reached

The following syslog is created when the condition gets cleared

SYSLOG: <#> xSTP BPDU Threshold condition cleared

When a switch gets detected on the port extender port:

SYSLOG: <#> External Switch detected on PE User Port

The following syslog is created when the condition gets cleared

SYSLOG: <#> No External Switch detected on any PE User Port

SYSLOG: <#> xSTP BPDU Threshold (1000 pps) reached

The clear syslog message is:

SYSLOG: <#> xSTP BPDU Threshold condition cleared

Displaying xSTP statistics

To display the information about the packets that are being processed by CPU.

The high CPU utilization rate may not be because of the received xSTP BPDUs. Therefore, need to check the changes in Campus Fabric (SPX) system configuration, and the network topology to bring down the CPU utilization.

Enter the **show statistics cpu-pkt** command to get the statistic information.

```
device# show statistics cpu-pkt
PDU Statistics
Rx xSTP PDUs              995(0 pps)       Tx xSTP PDUs              69551(268 pps)
Rx Link Agg PDUs          0(0 pps)         Tx Link Agg PDUs          0(0 pps)
Rx lldp PDUs              4484(18 pps)     Tx lldp PDUs              0(0 pps)
Rx cdp PDUs               0(0 pps)         Tx cdp PDUs               0(0 pps)
BPDU Tunnel MAC           0
***STP Threshold reached
***Peer Switch detected
```

The command **clear statistics cpu-pkt** can be used to clear the above statistics.

VLANs

- VLAN overview 243
- Routing between VLANs 260
- Enabling Port-Based VLANs and Tagging a Port to the VLAN 264
- Routing between VLANs using virtual routing interfaces (Layer 3 Switches only) 264
- VLAN and VE pre-provisioning 269
- VLAN-based static MAC entries configuration 270
- IP subnet address on multiple port-based VLAN configuration 271
- VLAN groups and virtual routing interface group 273
- Topology groups 277
- Super-aggregated VLAN configuration 280
- 802.1ad Tagging Configuration 288
- Simultaneous support for tagged and untagged VLANs 298
- VLAN Mapping 299
- Private VLAN configuration 301
- Displaying VLAN Information 312

VLAN overview

The following sections provide details about the VLAN types and features supported on the FastIron family of switches.

VLAN support on FastIron devices

You can configure the following type of VLAN on FastIron devices:

- Layer 2 port-based VLAN - a set of physical ports that share a common, exclusive Layer 2 broadcast domain

When a FastIron device receives a packet on a port that is a member of a VLAN, the device forwards the packet based on the following VLAN hierarchy:

- When the packet can be forwarded at Layer 2, the device forwards the packet on all the ports within the receiving port-based VLAN.

Layer 2 Port-based VLANs

On all RUCKUS devices, you can configure port-based VLANs. A port-based VLAN is a subset of ports on a RUCKUS device that constitutes a Layer 2 broadcast domain.

By default, all the ports on a RUCKUS device are members of the default VLAN. Thus, all the ports on the device constitute a single Layer 2 broadcast domain.

You can configure multiple port-based VLANs. You can configure up to 4094 port-based VLANs on a Layer 2 Switch or Layer 3 Switch. On both device types, valid VLAN IDs are 1 - 4095. You can configure up to the maximum number of VLANs within that ID range.

NOTE

VLAN IDs 4087 and 4090 are reserved for RUCKUS internal use only. VLAN 4094 is reserved for use by Single STP. If you want to use VLANs 4091 and 4092 as configurable VLANs, you can assign them to different VLAN IDs. For more information, refer to Assigning a Different VLAN ID to Default and Reserved VLANs on page 261.

NOTE
RUCKUS ICX 7000 series switches can parse up to two VLAN tags.

The following behaviors apply to VLANs:

- All interfaces will be untagged members of the default VLAN or any non-default VLAN, unless you explicitly remove this untagged interface from the default VLAN.

  NOTE
  There is no need to explicitly run the **dual-mode** command. Hence, the **dual-mode** command is no longer supported.

- When you configure an interface as untagged member of a non-default VLAN, that interface will be moved from the default VLAN to the configured VLAN.
- When you configure an interface as a tagged member of a non-default VLAN, the untagged VLAN membership of the interface will not be modified, be it default-VLAN or non-default VLAN. You can configure default VLAN port membership.
- You can remove untagged membership of an interface using the **no untagged ethernet** command within the default VLAN node.
- An interface should be a member of at least one VLAN at any given time.
- An interface will be moved to the default VLAN when the last non-default VLAN is removed on that interface (tagged or untagged).
- When an untagged membership of an interface is removed from a non-default VLAN, the interface will be added back to the default VLAN as an untagged interface.

  NOTE
  An untagged interface can be configured as tagged in other user VLANs, and a tagged interface can be configured as untagged in a default VLAN or in non-default VLANs.

NOTE
In FastIron release 08.0.90 and later releases, there will no longer be any link flap when a port is being added as a tagged member to a VLAN for the first time or when a port is removed from the last tagged VLAN. External devices that may have relied on this link flap in the past for any kind of renegotiation must be reconfigured appropriately, or the user must manually flap the interface.

Because each port-based VLAN is a separate Layer 2 broadcast domain, each VLAN can be configured to run a separate instance of the Spanning Tree Protocol (STP). Layer 2 traffic is bridged within a port-based VLAN, and Layer 2 broadcasts are sent to all the ports within the VLAN.

Configuring Port-based VLANs

Port-based VLANs allow you to provide separate spanning tree protocol (STP) domains or broadcast domains on a port-by-port basis.

This section describes how to perform the following tasks for port-based VLANs using the CLI:

- Create a VLAN
- Delete a VLAN
- Modify a VLAN
- Change a VLAN priority
- Enable or disable STP on the VLAN

1--Simple port-based VLAN configuration

The following figure shows a simple port-based VLAN configuration using a single RUCKUS Layer 2 switch. All ports within each VLAN are untagged. One untagged port within each VLAN is used to connect the Layer 2 switch to a Layer 3 switch for Layer 3 connectivity between the two port-based VLANs.

FIGURE 81 Port-based VLANs 222 and 333

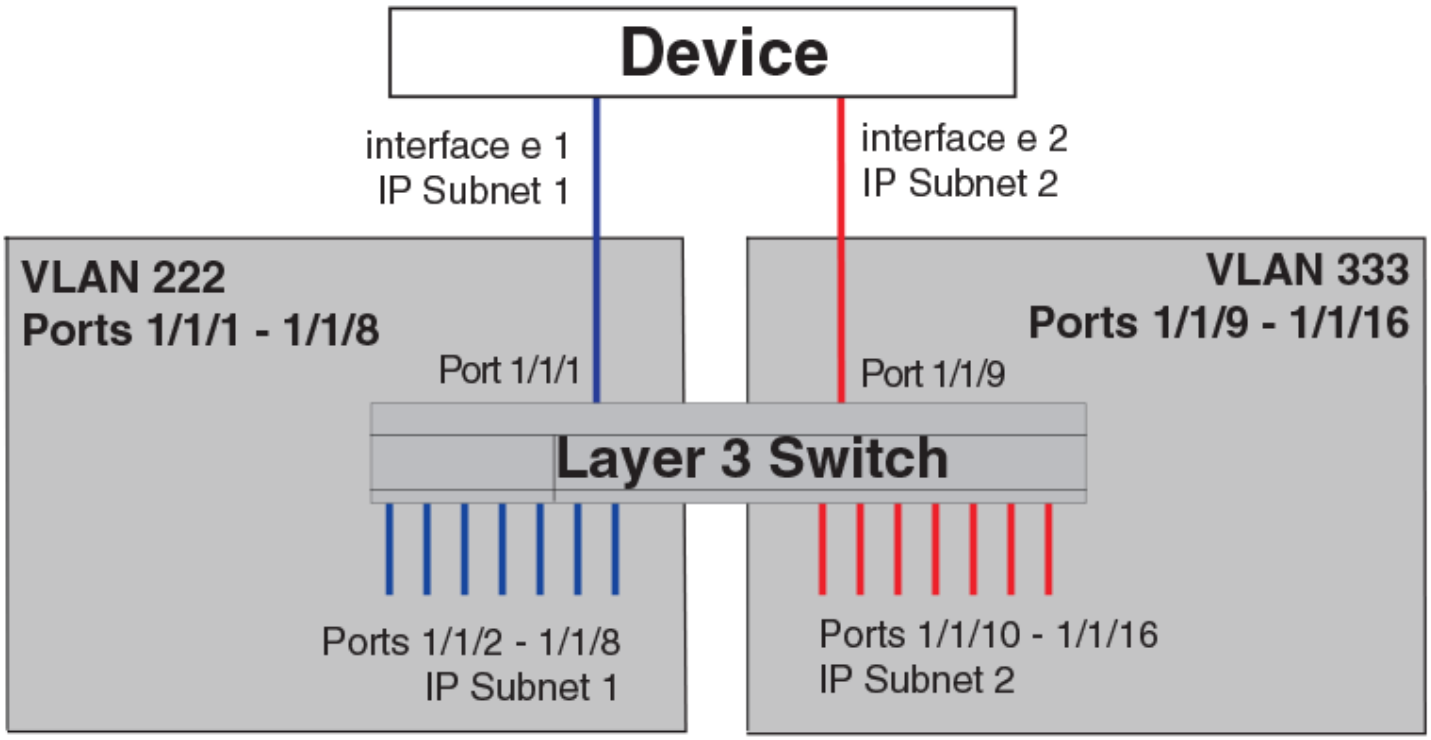

To create the two port-based VLANs shown in the above figure, enter the following commands.

```
device(config)# vlan 222 by port
device(config-vlan-222)# untagged ethernet 1/1/1 to 1/1/8
device(config-vlan-222)# vlan 333 by port
device(config-vlan-333)# untagged ethernet 1/1/9 to 1/1/16
```

2--More complex port-based VLAN configuration

The following figure shows a more complex port-based VLAN configuration using multiple Layer 2 switches and IEEE 802.1Q VLAN tagging. The backbone link connecting the three Layer 2 switches remains untagged. One untagged port within each port-based VLAN on Device-A connects each separate network wide Layer 2 broadcast domain to the router for Layer 3 forwarding between broadcast domains. The STP priority is configured to force Device-A to be the root bridge for VLANs RED and BLUE. The STP priority on Device-B is configured so that Device-B is the root bridge for VLANs GREEN and BROWN.

FIGURE 82 More Complex Port-based VLAN

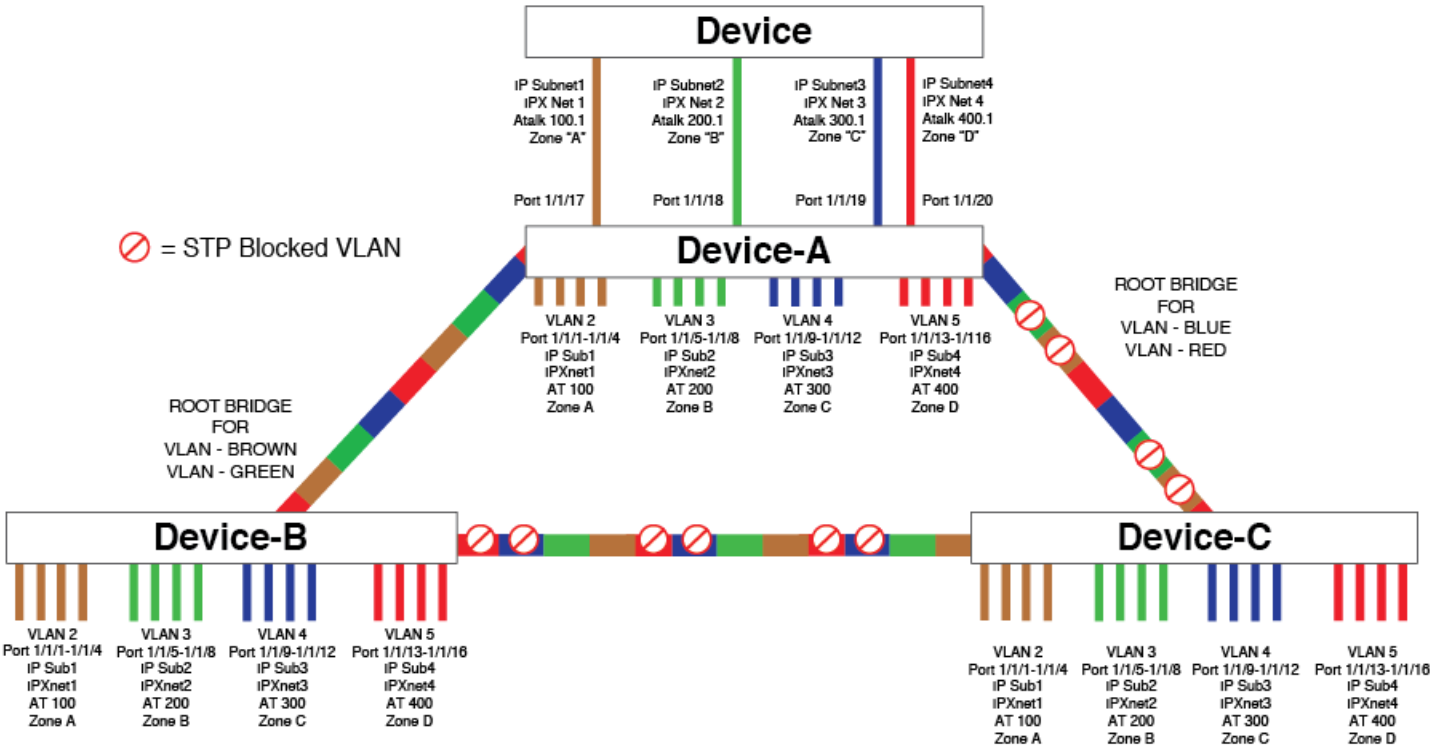

To configure the Port-based VLANs on the Layer 2 switches in the previous figure, use the following method.

Configuring port-based VLANs on Device-A

Enter the following commands to configure Device-A.

1. Enable the privileged EXEC mode and enter the global configuration command.

```
device> enable
device# configure terminal
```

2. Enter the device name.

```
device(config)# hostname device-A
```

3. Configure a VLAN by assigning an ID to the VLAN and name it.

```
device-A(config)# vlan 2 name BROWN
```

4. Configure the following ports as untagged member of VLAN 2.

```
device-A(config-vlan-2)# untagged ethernet 1/1/1 to 1/1/4 ethernet 1/1/17
```

5. If ports are not a member of the above specified VLAN, then add the ports as a tagged member of that VLAN.

```
device-A(config-vlan-2)# tagged ethernet 1/1/25 to 1/1/26
```

6. Enable STP using the **spanning-tree** command.

```
device-A(config-vlan-2)# spanning-tree
```

7. Follow the same steps for other VLANs with the addition of changing the port priority for VLAN 4 and VLAN 5.

```
device-A(config-vlan-2)# vlan 3 name GREEN
device-A(config-vlan-3)# untagged ethernet 1/1/5 to 1/1/8 ethernet 1/1/18
device-A(config-vlan-3)# tagged ethernet 1/1/25 to 1/1/26
device-A(config-vlan-3)# spanning-tree
device-A(config-vlan-3)# vlan 4 name BLUE
device-A(config-vlan-4)# untagged ethernet 1/1/9 to 1/1/12 ethernet 1/1/19
device-A(config-vlan-4)# tagged ethernet 1/1/25 to 1/1/26
device-A(config-vlan-4)# spanning-tree
device-A(config-vlan-4)# spanning-tree priority 500
device-A(config-vlan-4)# vlan 5 name RED
device-A(config-vlan-5)# untagged ethernet 1/1/13 to 1/1/16 ethernet 1/1/20
device-A(config-vlan-5)# tagged ethernet 1/1/25 to 1/1/26
device-A(config-vlan-5)# spanning-tree
device-A(config-vlan-5)# spanning-tree priority 500
device-A(config-vlan-5)# end
device-A# write memory
```

Follow the above same method for Device-B and Device-C.

Configuring port-based VLANs on Device-B

Enter the following commands to configure Device-B.

```
device> enable
device# configure terminal
device(config)# hostname Device-B
device-B(config)# vlan 2 name BROWN
device-B(config-vlan-2)# untagged ethernet 1/1/1 to 1/1/4
device-B(config-vlan-2)# tagged ethernet 1/1/25 to 1/1/26
device-B(config-vlan-2)# spanning-tree
device-B(config-vlan-2)# spanning-tree priority 500
device-B(config-vlan-2)# vlan 3 name GREEN
device-B(config-vlan-3)# untagged ethernet 1/1/5 to 1/1/8
device-B(config-vlan-3)# tagged ethernet 1/1/25 to 1/1/26
device-B(config-vlan-3)# spanning-tree
device-B(config-vlan-3)# spanning-tree priority 500
device-B(config-vlan-3)# vlan 4 name BLUE
device-B(config-vlan-4)# untagged ethernet 1/1/9 to 1/1/12
device-B(config-vlan-4)# tagged ethernet 1/1/25 to 1/1/26
device-B(config-vlan-4)# vlan 5 name RED
device-B(config-vlan-5)# untagged ethernet 1/1/13 to 1/1/16
device-B(config-vlan-5)# tagged ethernet 1/1/25 to 1/1/26
device-B(config-vlan-5)# end
device-B# write memory
```

Configuring port-based VLANs on Device-C

Enter the following commands to configure Device-C.

```
device> enable
device# configure terminal
device(config)# hostname Device-C
device-C(config)# vlan 2 name BROWN
device-C(config-vlan-2)# untagged ethernet 1/1/1 to 1/1/4
device-C(config-vlan-2)# tagged ethernet 1/1/25 to 1/1/26
device-C(config-vlan-2)# vlan 3 name GREEN
device-C(config-vlan-3)# untagged ethernet 1/1/5 to 1/1/8
device-C(config-vlan-3)# tagged ethernet 1/1/25 to 1/1/26
device-C(config-vlan-3)# vlan 4 name BLUE
```

```
device-C(config-vlan-4)# untagged ethernet 1/1/9 to 1/1/12
device-C(config-vlan-4)# tagged ethernet 1/1/25 to 1/1/26
device-C(config-vlan-4)# vlan 5 name RED
device-C(config-vlan-5)# untagged ethernet 1/1/13 to 1/1/16
device-C(config-vlan-5)# tagged ethernet 1/1/25 to 1/1/26
device-C(config-vlan-5)# end
device-C# write memory
```

Modifying a port-based VLAN

You can make the following modifications to a port-based VLAN:

- Add or delete a VLAN port.
- Enable or disable STP.

Removing a port-based VLAN

Suppose you want to remove VLAN 5 from the example in Figure 82 on page 246. To do so, use the following procedure.

1. Access the global configuration mode on Device-A by entering the following commands.

```
device-A> enable
No password has been assigned yet...

device-A# configure terminal
device-A(config)#
```

2. Enter the following command to remove the port VLAN 5.

```
device-A(config)# no vlan 5
```

3. Enter the following commands to exit the global configuration mode and save the configuration to the system-config file on flash memory.

```
device-A(config)# end
device-A# write memory
```

4. Repeat step 1 through step 3 on Device-B and Device-C.

Moving untagged port membership from one non-default VLAN to another

You can move untagged ports from one VLAN to another, using the wrapper CLI **vlan-config move untagged**. This CLI can be used to modify untagged VLAN membership of a port. Beginning with FastIron 08.0.80 release, support for dual-mode port is removed.

NOTE
This wrapper CLI performs several CLI calls internally. If any internal CLI fails to execute, corresponding message will be displayed.

1. Access the global configuration mode on entering the following commands.

```
deviceenable
No password has been assigned yet...

device# configure terminal
device(config)#
```

2. Access the level of the CLI for configuring port-based VLAN, by entering the following commands.

```
device(config)#vlan 20
device(config-vlan-20)#untagg e 1/1/2
Added untagged port(s) ethe 1/1/2 to port-vlan 20.
device(config-vlan-20)#
device(config-vlan-20)#
device(config-vlan-20)#inter e 1/1/2
device(config-if-e1000-1/1/2)#
```

3. Enter the following command to remove the untagged port and add it to another VLAN.

```
device(config-if-e40000-1/1/2)#vlan-config move untagged 100
```

4. Enter the following commands to exit the VLAN configuration mode and save the configuration to the system-config file on flash memory.

```
device(config-if-e40000-1/1/2)# end
devicewrite memory
```

If the new VLAN is not yet configured, the command will create it and the port will be added to it.

NOTE
The **vlan-config move untagged** is a non-savable command. It can be applicable to multiple interfaces. This port should belong to a non-default VLAN before moving to another VLAN. The command does not work if the port belongs to a member of default vlan only. The maximum number of allowed VLANs for a PE port is based on available global pool PE-VLAN entries.

Removing VLANs from physical ports

You can remove VLANs from an Ethernet port, and the port will be added back to the default VLAN as an untagged member port.

The **vlan-config remove all** feature is used to remove all VLANs from physical ports (except the default VLAN and reserved VLANs). The untagged ports will be moved to the default VLAN after removing the ports from this VLAN and the tagged ports will be moved to the default VLAN if they are not members of any other VLAN.

NOTE
The **vlan-config remove all** feature is supported on all ICX devices.

Removing VLANs from a physical port

To remove VLANs from a physical port, complete the following steps.

1. From global configuration mode, enter interface Ethernet configuration mode.

```
device(config)# interface ethernet 1/1/1
```

2. Enter the **vlan-config remove all** command to remove all VLANs from the Ethernet port.
   - Enter the **vlan-config remove all** command to remove the VLANs from the Ethernet port.

   The following examples indicate how the command can be used.

```
device(config-if-e40000-1/1/1)# vlan-config remove all
(port(s) will be removed from 300 VLANs in single execution)

device(config-if-e40000-1/1/1)# vlan-config remove all  2000 to 2005
(port(s) will be removed from 300 VLANs using this command)
```

To remove all VLANs from a physical port, enter commands such as the following.

```
device(config)# interface ethernet 1/1/1
device(config-if-e40000-1/1/1)# vlan-config remove all
```

NOTE

VLAN groups cannot be removed from the ports using this command.

The following is an example to show that vlan-groups cannot be removed from the ports.

```
device(config)# vlan-group 1 vlan 1001 to 1005
device(config-vlan-group-1)# tag ethernet 1/1/1
Added tagged port(s) ethernet 1/1/1 to vlan-group 1.
device(config-vlan-group-1)# exit
device(config)#
device(config)# interface ethernet 1/1/1
device(config-if-e4000-1/1/1)# vlan-config remove all
Port(s) ethernet 1/1/1 cannot be removed from VLANs 1 1001 to 1005
```

To remove all VLANs from more than one physical port, enter commands such as the following.

```
device(config)# interface ethernet 1/1/1 ethernet 1/1/5
device(config-mif-1/1/1,1/1/5)# vlan-config remove all
```

Add and remove all tagged VLANs

A new wrapper is introduced to add and remove selective VLAN at the interface level.

To enable addition and deletion of a tagged port selectively to VLAN, the existing commands **vlan-config add** and **vlan-config remove** is upgraded to support selective VLANs and VLAN range. The **vlan-config add** command is modified to accept optional parameter of VLAN or VLAN range. The **vlan-config remove** command is modified to accept optional parameter of VLAN.

NOTE

The **vlan-config add** and **vlan-config remove** commands are not supported on the PE ports.

Adding selective VLAN

The command will create a new VLAN and add the interface to it, if interface being added is the first interface. The command can add port to non-active non-configured VLAN. The command is available in MIF mode. The maximum VLAN or VLAN range supported in a single input is 1024.

```
device(config)# Interface e 1/1/1
device(config-if-e40000-1/1/1)#vlan-config add
      all-tagged    Add interface to all VLAN(s)
  tagged-vlan   Add interface to VLAN(s)
  <cr>
device(config-if-e40000-1/1/1)#vlan-config add tagged-vlan
      DECIMAL   VLAN number
  <cr>
device(config-if-e40000-1/1/1)#vlan-config add tagged-vlan 101 102 103
INFO : Command may take approximately 0 Seconds
device(config-if-e40000-1/1/1)#
Port(s) ethe 1/1/1  add to 1 vlan(s) complete.....
device(config-if-e40000-1/1/1)#
device(config-if-e40000-1/1/1)#vlan-config add tagged-vlan 1001 to 1005
INFO : Command may take approximately 0 Seconds
device(config-if-e40000-1/1/1)#
```

NOTE

The CLI prompt will not be available for next command until port is added to all VLANs in the system

Removing selective VLAN

The max VLAN or VLAN Range supported in single input will be 1024.

```
device(config-if-e40000-1/1/1)#vlan-config remove
      all    remove all VLANs from physical port
      vlan   setup vlan list
      <cr>
device(config-if-e40000-1/1/1)#vlan-config remove vlan 107 108 109 110
device(config-if-e40000-1/1/1)#
```

NOTE
The command is a non-savable command, which removes the interface as a tagged member of all configured and active VLAN. The command is available in MIF mode. The command line interface prompt will not be available for next command until the port is added to all the VLANs in the system.

Multi-Range VLANs

The multi-range VLAN feature allows users to use a single command to create and configure multiple VLANs. These VLANs can be continuous, for example, from 2 to 7, or discontinuous, for example, 2 4 7.

Creating and Configuring a Multi-Range VLAN

You can create and configure multi-range VLANs using various VLAN parameters. These VLANs can be continuous or discontinous or a combination of continuous and discontinous VLANs.

1. Enter global configuration mode.

   ```
   device# configure terminal
   ```

2. Create a multi-range VLAN using one of the following methods.
   - Create a continuous range of VLANs.

     ```
     device(config)# vlan 2 to 7
     ```

   - Create discontinuous VLANs.

     ```
     device(config)# vlan 2 4 7
     ```

   - Create continuous and discontinuous VLANS.

     ```
     device(config)# vlan 16 17 20 to 24
     ```

     NOTE
     You can create or configure a maximum number of 1024 VLANs with a single command.

3. Add tagged port or a range of ports to multi-range VLANs.

   ```
   device(config-mvlan-2-7)# tagged ethernet 1/1/3 to 1/1/4
   device(config-mvlan-16*24)# tagged ethernet 1/1/1
   ```

   In the first example, the tagged Ethernet ports 1/1/3 and 1/1/4 are added to VLANs, 2 through 7. In the second example, the tagged Ethernet port 1/1/1 is added to VLANs 16, 17, 20, 21, 22, 23, and 24.

4. Configure a static MAC address on a range of Ethernet ports for multi-range VLANs.

   ```
   device(config-mvlan-2-7)# static-mac-address 0000.0063.67ff ethernet 1/1/3 to 1/1/4
   ```

5. Monitor a mirrored port on multi-range VLANs.

```
device(config-mvlan-2-7)# monitor ethernet 1/1/1
```

6. Set IGMP snooping for multi-range VLANs.

```
device(config-mvlan-2-7)# multicast active
device(config-mvlan-2-7)# multicast6 passive
```

7. Enable IP source guard for multi-range VLANs.
   - Enable IP source guard on all ports of multiple VLANs.

     ```
     device(config-mvlan-2-7)# source-guard enable
     ```

   - Enable IP source guard on a range of ports of multiple VLANs.

     ```
     device(config-mvlan-2-7)# source-guard enable ethernet 1/1/3 to 1/1/4
     ```

8. Enable 802.1W spanning tree on multi-range VLANs.

```
device(config-mvlan-2-7)# spanning-tree 802-1w
```

9. Exit MVLAN configuration mode.

```
device(config-mvlan-2-7)# exit
```

10. (Optional) Delete a multi-range VLAN using one of the following methods.
    - Delete a continuous range of VLANs.

      ```
      device(config)# no vlan 2 to 7
      ```

    - Delete discontinuous VLANs.

      ```
      device(config)# no vlan 2 4 7
      ```

    - Delete continuous and discontinuous VLANS.

      ```
      device(config)# no vlan 16 17 20 to 24
      ```

The following example shows how to configure multi-range VLANs using various VLAN parameters.

```
device# configure terminal
device(config)# vlan 2 to 7
device(config-mvlan-2-7)# tagged ethernet 1/1/3 to 1/1/4
device(config-mvlan-2-7)# static-mac-address 0000.0063.67ff ethernet 1/1/3 to 1/1/4
device(config-mvlan-2-7)# monitor ethernet 1/1/1
device(config-mvlan-2-7)# multicast active
device(config-mvlan-2-7)# source-guard enable
device(config-mvlan-2-7)# spanning-tree 802-1w
device(config-mvlan-2-7)# exit
device(config)# no vlan 2 to 7
```

Displaying Multi-Range VLAN Information

You can display the mutli-range VLAN information from the multi-range VLAN configuration mode.

The following example displays the STP information for mutiple VLANs (VLANs 4, 5, and 6).

```
device(config)# vlan 4 to 6
device(config-mvlan-4-6)# show 802-1w
```

```
--- VLAN 4 [ STP Instance owned by VLAN 4 ] ----------------------------
Bridge IEEE 802.1W Parameters:
Bridge Bridge Bridge Bridge Force tx
Identifier MaxAge Hello FwdDly Version Hold
hex sec sec sec cnt
8000002022227700 20 2 15 Default 3
RootBridge RootPath DesignatedBri- Root Max Fwd Hel
Identifier Cost dge Identifier Port Age Dly lo
hex hex sec sec sec
8000002022227700 0 8000002022227700 Root 20 15 2
Port IEEE 802.1W Parameters:
<--- Config Params --><-------------- Current state ----------------->
Port Pri PortPath P2P Edge Role State Designa- Designated
Num Cost Mac Port ted cost bridge
1/1/1 128 20000 F F DESIGNATED FORWARDING 0 8000002022227700
--- VLAN 5 [ STP Instance owned by VLAN 5 ] ----------------------------
Bridge IEEE 802.1W Parameters:
Bridge Bridge Bridge Bridge Force tx
Identifier MaxAge Hello FwdDly Version Hold
hex sec sec sec cnt
8000002022227700 20 2 15 Default 3
RootBridge RootPath DesignatedBri- Root Max Fwd Hel
Identifier Cost dge Identifier Port Age Dly lo
hex hex sec sec sec
8000002022227700 0 8000002022227700 Root 20 15 2
Port IEEE 802.1W Parameters:
<--- Config Params --><-------------- Current state ----------------->
Port Pri PortPath P2P Edge Role State Designa- Designated
Num Cost Mac Port ted cost bridge
1/1/1 128 20000 F F DESIGNATED FORWARDING 0 8000002022227700
--- VLAN 6 [ STP Instance owned by VLAN 6 ] ----------------------------
Bridge IEEE 802.1W Parameters:
Bridge Bridge Bridge Bridge Force tx
Identifier MaxAge Hello FwdDly Version Hold
hex sec sec sec cnt
8000002022227700 20 2 15 Default 3
RootBridge RootPath DesignatedBri- Root Max Fwd Hel
Identifier Cost dge Identifier Port Age Dly lo
hex hex sec sec sec
8000002022227700 0 8000002022227700 Root 20 15 2
Port IEEE 802.1W Parameters:
<--- Config Params --><-------------- Current state ----------------->
Port Pri PortPath P2P Edge Role State Designa- Designated
Num Cost Mac Port ted cost bridge
1/1/1 128 20000 F F DESIGNATED FORWARDING 0 8000002022227700
```

You can use various **show** parameters for the specified VLAN range from the multi-range VLAN configuration mode. The output of these **show** commands display information about the specified VLANs only.

The following example displays the MAC address table for a specific VLAN.

```
device# show mac-address vlan 1 0000.0000.0001

Total active entries from all ports = 16
MAC-Address Port Type Index
0000.0000.0001 1/1/1 Dynamic NA
Present in following devices (at hw index) :-
0 (8196 ) 4 (8196 )
```

The following example displays the STP information for a specific VLAN.

```
device# show span vlan 100

STP instance owned by VLAN 100
Global STP (IEEE 802.1D) Parameters:
VLAN Root Root Root Prio Max He- Ho- Fwd Last Chg Bridge
ID ID Cost Port rity Age llo ld dly Chang cnt Address
Hex sec sec sec sec sec
100 8000cc4e24b46fcc 0 Root 8000 20 2 1 15 11 1 cc4e24b46fcc
Port STP Parameters:
```

```
Port Prio Path State Fwd Design Designated Designated
Num rity Cost Trans Cost Root Bridge
Hex
1/1/1 80 4 FORWARDING 1 0 8000cc4e24b46fcc 8000cc4e24b46fcc
1/1/2 80 4 FORWARDING 1 0 8000cc4e24b46fcc 8000cc4e24b46fcc
1/1/3 80 4 FORWARDING 1 0 8000cc4e24b46fcc 8000cc4e24b46fcc
1/1/4 80 4 FORWARDING 1 0 8000cc4e24b46fcc 8000cc4e24b46fcc
1/1/5 80 4 FORWARDING 1 0 8000cc4e24b46fcc 8000cc4e24b46fcc
1/1/6 80 4 FORWARDING 1 0 8000cc4e24b46fcc 8000cc4e24b46fcc
1/1/7 80 4 FORWARDING 1 0 8000cc4e24b46fcc 8000cc4e24b46fcc
1/1/8 80 4 FORWARDING 1 0 8000cc4e24b46fcc 8000cc4e24b46fcc
lg1 80 4 FORWARDING 1 0 8000cc4e24b46fcc 8000cc4e24b46fcc
lg256 80 4 FORWARDING 1 0 8000cc4e24b46fcc 8000cc4e24b46fcc
```

The following example displays the VLAN information.

```
device# show vlan

Maximum PORT-VLAN entries: 4060
Legend: [Stk=Stack-Unit, S=Slot]
PORT-VLAN 1, Name DEFAULT-VLAN, Priority level0, Spanning tree On
Untagged Ports: (Stk0/S1) 3 4 5 6 7 8 9 10 11 12 13 14
Untagged Ports: (Stk0/S1) 15 16 17 18 19 20 21 22 23 24 25 26
Untagged Ports: (Stk0/S1) 27 28 29 30 31 32 33 34 35 36 37 38
Untagged Ports: (Stk0/S1) 39 40 41 42 43 44 45 46 47 48
Untagged Ports: (Stk0/S2) 1 2
Tagged Ports: None
Mac-Vlan Ports: None
Monitoring: Disabled
PORT-VLAN 10, Name [None], Priority level0, Spanning tree On
Untagged Ports: (Stk0/S1) 1
Tagged Ports: None
Mac-Vlan Ports: None
Monitoring: Enabled
PORT-VLAN 20, Name [None], Priority level0, Spanning tree On
Untagged Ports: (Stk0/S1) 2
Tagged Ports: None
Mac-Vlan Ports: None
Monitoring: Disabled
```

The following example displays the VSRP commands for a specific VLAN.

```
device# show vsrp vlan 100 vrid 100

VLAN 100
auth-type no authentication
VRID 100
========
State Administrative-status Advertise-backup Preempt-mode save-current
master enabled disabled true false
Parameter Configured Current Unit/Formula
priority 100 50 (100-0)*(2.0/4.0)
hello-interval 1 1 sec/1
dead-interval 3 3 sec/1
hold-interval 3 3 sec/1
initial-ttl 2 2 hops
next hello sent in 00:00:00.3
Member ports: ethe 1/2/5 to 1/2/8
Operational ports: ethe 1/2/5 ethe 1/2/8
Forwarding ports: ethe 1/2/5 ethe 1/2/8
Restart ports: 1/2/5(1) 1/2/6(1) 1/2/7(1) 1/2/8(1)
```

Default VLAN

By default, all the ports on a RUCKUS device are in a single port-based VLAN. This VLAN is called the DEFAULT-VLAN and is VLAN number 1. RUCKUS devices do not contain any protocol VLANs or IP subnet VLANs by default.

The following figure shows an example of the default Layer 2 port-based VLAN.

FIGURE 83 Default Layer 2 port-based VLAN

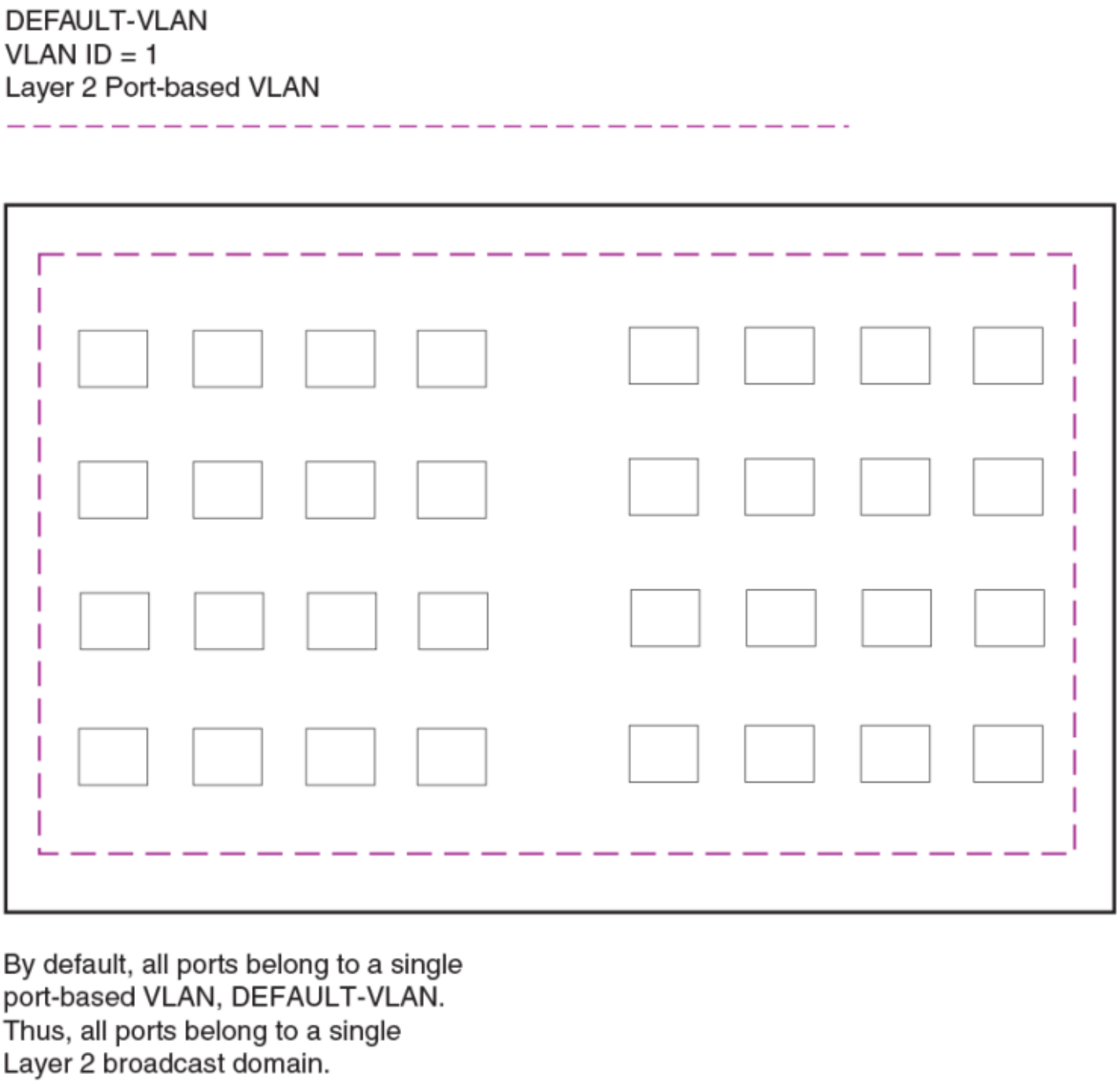

When you configure a port-based VLAN, one of the configuration items you provide is the ports that are in the VLAN. When you configure the VLAN, the RUCKUS device removes only untagged ports from default VLAN. Tagged ports remains in default VLAN (if they are members of default VLAN). By removing the ports from the default VLAN, the RUCKUS device ensures that each port resides in only one Layer 2 broadcast domain.

NOTE
Information for the default VLAN is available only after you define another VLAN.

Some network configurations may require that a port be able to reside in two or more Layer 2 broadcast domains (port-based VLANs). In this case, you can enable a port to reside in multiple port-based VLANs by tagging the port. Refer to the following section.

If your network requires that you use VLAN ID 1 for a user-configured VLAN, you can reassign the default VLAN to another valid VLAN ID. Refer to Assigning a Different VLAN ID to Default and Reserved VLANs on page 261.

802.1Q tagging

802.1Q tagging is an IEEE standard that allows a networking device to add information to a Layer 2 packet in order to identify the VLAN membership of the packet. RUCKUS devices tag a packet by adding a four-byte tag to the packet. The tag contains the tag value, which identifies the data as a tag, and also contains the VLAN ID of the VLAN from which the packet is sent.

- The default tag value is 8100 (hexadecimal). This value comes from the 802.1Q specification. You can change this tag value on a global basis on RUCKUS devices if needed to be compatible with other vendors' equipment.
- The VLAN ID is determined by the VLAN on which the packet is being forwarded.

The following figure shows the format of packets with and without the 802.1Q tag. The tag format is vendor-specific. To use the tag for VLANs configured across multiple devices, make sure all the devices support the same tag format.

FIGURE 84 Packet containing a RUCKUS 802.1Q VLAN tag

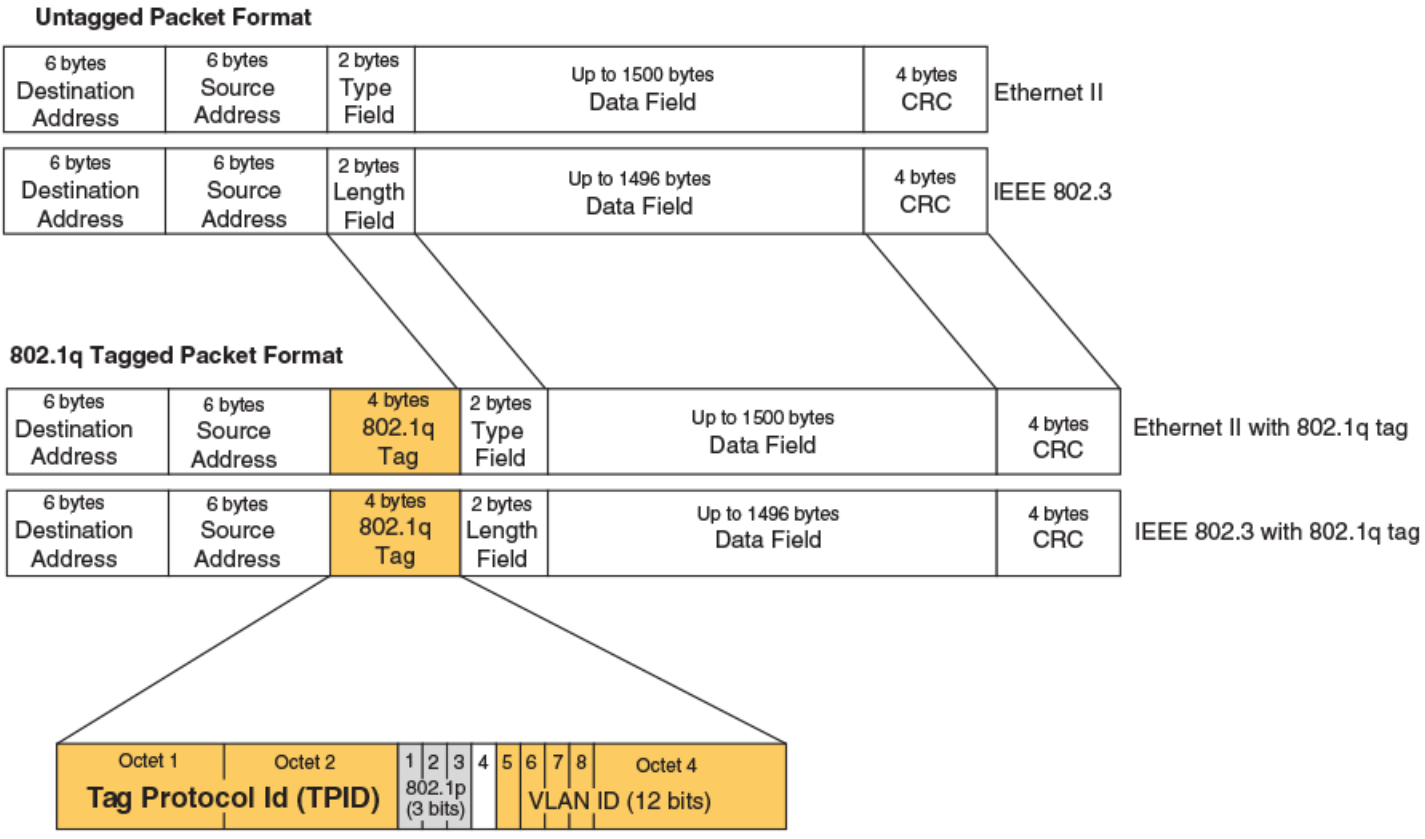

If you configure a VLAN that spans multiple devices, you need to use tagging only if a port connecting one of the devices to the other is a member of more than one port-based VLAN. If a port connecting one device to the other is a member of only a single port-based VLAN, tagging is not required.

If you use tagging on multiple devices, each device must be configured for tagging and must use the same tag value. In addition, the implementation of tagging must be compatible on the devices. The tagging on all RUCKUS devices is compatible with other RUCKUS devices.

The following figure shows an example of two devices that have the same Layer 2 port-based VLANs configured across them. Notice that only one of the VLANs requires tagging.

FIGURE 85 VLANs configured across multiple devices

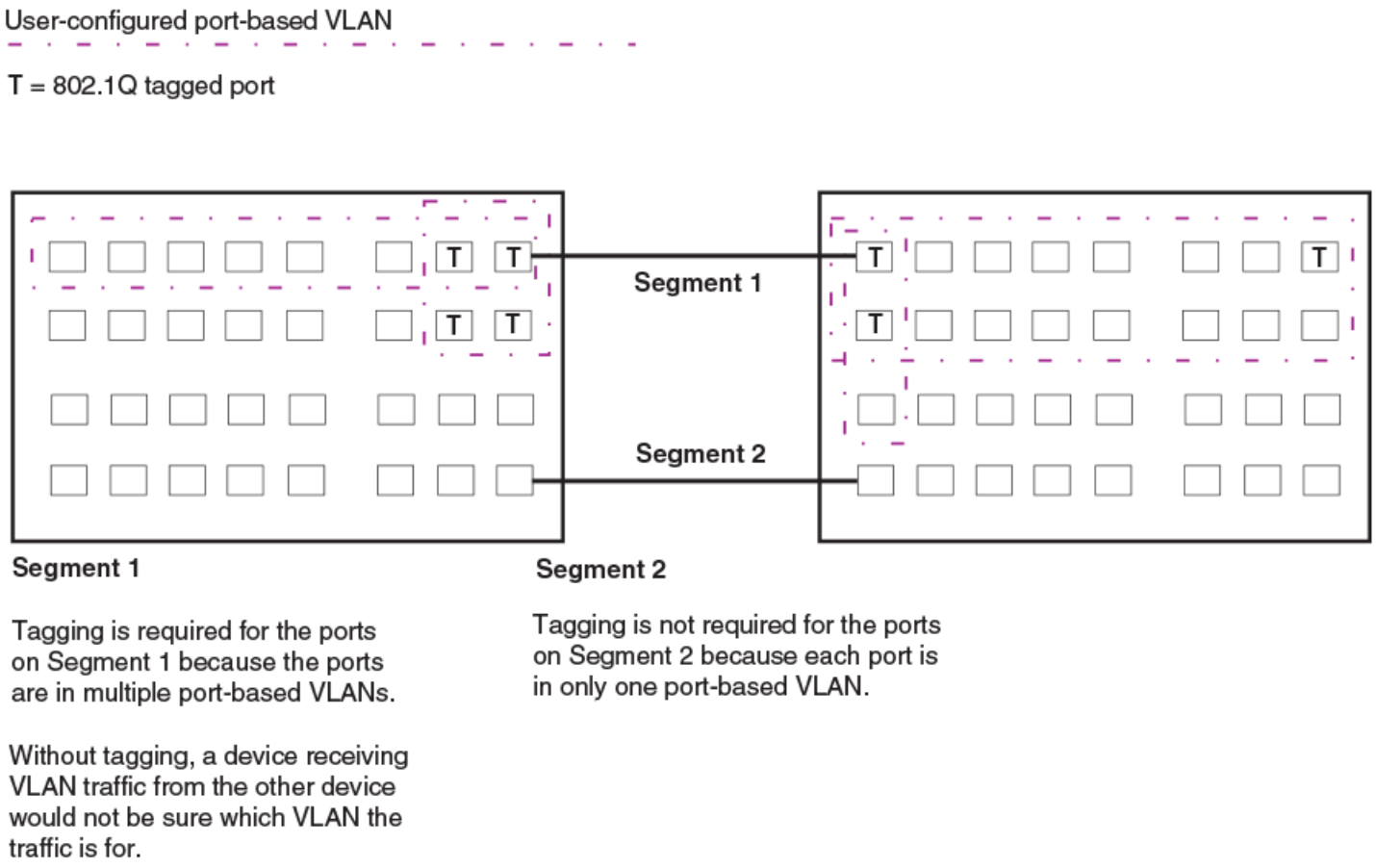

Support for 802.1ad (Q-in-Q) tagging

RUCKUS devices provide finer granularity for configuring 802.1Q tagging, enabling you to configure 802.1Q tag-profiles on a group of ports, thereby enabling the creation of two identical 802.1Q tags (802.1ad tagging) on a single device. This enhancement improves SAV interoperability between RUCKUS devices and other vendors' devices that support the 802.1Q tag-profiles, but are not very flexible with the tag-profiles they accept.

802.1ad Tagging for ICX 7xxx Devices

The following enhancement allows the ICX 7xxx devices to use Q-in-Q and SAV, by allowing the changing of a tag profile for ports:

- Tag profiles on a single port or a group of ports can be configured to point to the global tag profile.

For example applications and configuration details, refer to 802.1ad Tagging Configuration on page 288.

To configure a global tag profile, enter the following command in configuration mode.

```
device(config)# tag-profile 9500
```

To direct individual ports or a range of ports to this tag profile, enter commands similar to the following example.

```
device(config)# interface ethernet 1/1/1
device(config-if-e1000-1/1/1)# tag-profile enable
device(config-mif-1/1/1,1/2/1)# tag-profile enable
```

Spanning Tree Protocol (STP)

The default state of STP depends on the device type:

- STP is disabled by default on RUCKUS Layer 3 Switches.
- STP is enabled by default on RUCKUS Layer 2 Switches.

Also by default, each port-based VLAN has a separate instance of STP. Thus, when STP is globally enabled, each port-based VLAN on the device runs a separate spanning tree.

You can enable or disable STP on the following levels:

- **Globally** - Affects all ports on the device.

  NOTE
  If you configure a port-based VLAN on the device, the VLAN has the same STP state as the default STP state on the device. Thus, on Layer 2 Switches, new VLANs have STP enabled by default. On Layer 3 Switches, new VLANs have STP disabled by default. You can enable or disable STP in each VLAN separately. In addition, you can enable or disable STP on individual ports.

- **Port-based VLAN** - Affects all ports within the specified port-based VLAN.

STP is a Layer 2 protocol. Thus, you cannot enable or disable STP for individual protocol VLANs or for IP subnet VLANs. The STP state of a port-based VLAN containing these other types of VLANs determines the STP state for all the Layer 2 broadcasts within the port-based VLAN. This is true even though Layer 3 protocol broadcasts are sent on Layer 2 within the VLAN.

It is possible that STP will block one or more ports in a protocol VLAN that uses a virtual routing interface to route to other VLANs. For IP protocol and IP subnet VLANs, even though some of the physical ports of the virtual routing interface are blocked, the virtual routing interface can still route so long as at least one port in the virtual routing interface protocol VLAN is not blocked by STP.

If you enable Single STP (SSTP) on the device, the ports in all VLANs on which STP is enabled become members of a single spanning tree. The ports in VLANs on which STP is disabled are excluded from the single spanning tree.

For more information, refer to Spanning Tree Protocol on page 153.

Virtual routing interfaces

A virtual routing interface is a logical routing interface that RUCKUS Layer 3 Switches use to route Layer 3 protocol traffic between protocol VLANs.

RUCKUS devices send Layer 3 traffic at Layer 2 within a protocol VLAN. However, Layer 3 traffic from one protocol VLAN to another must be routed.

If you want the device to be able to send Layer 3 traffic from one protocol VLAN to another, you must configure a virtual routing interface on each protocol VLAN, then configure routing parameters on the virtual routing interfaces. For example, to enable a Layer 3 Switch to route IP traffic from one IP subnet VLAN to another, you must configure a virtual routing interface on each IP subnet VLAN, then configure the appropriate IP routing parameters on each of the virtual routing interfaces.

The following figure shows an example of Layer 3 protocol VLANs that use virtual routing interfaces for routing.

FIGURE 86 Use virtual routing interfaces for routing between Layer 3 protocol VLANs

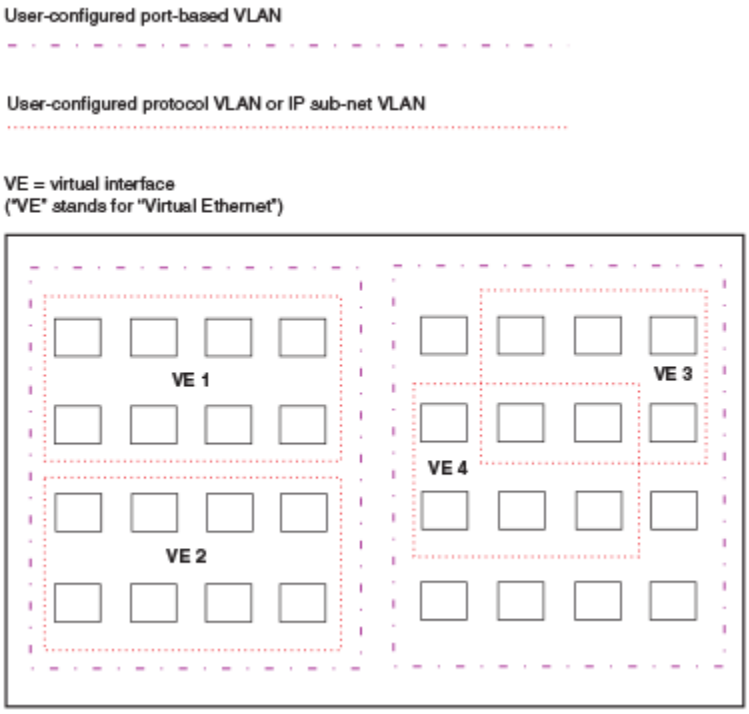

VLAN and virtual routing interface groups

RUCKUS ICX FastIron devices support the configuration of VLAN groups. To simplify configuration, you can configure VLAN groups and virtual routing interface groups. When you create a VLAN group, the VLAN parameters you configure for the group apply to all the VLANs within the group. Additionally, you can easily associate the same IP subnet interface with all the VLANs in a group by configuring a virtual routing interface group with the same ID as the VLAN group.

For configuration information, refer to VLAN groups and virtual routing interface group on page 273.

Super aggregated VLANs

RUCKUS ICX devices support Super Aggregated VLANs. You can aggregate multiple VLANs within another VLAN. This feature allows you to construct Layer 2 paths and channels. This feature is particularly useful for Virtual Private Network (VPN) applications in which you need to provide a private, dedicated Ethernet connection for an individual client to transparently reach its subnet across multiple networks.

For an application example and configuration information, refer to Super-aggregated VLAN configuration on page 280.

Trunk group ports and VLAN membership

A trunk group is a set of physical ports that are configured to act as a single physical interface. Each trunk group port configuration is based on the configuration of the lead port, which is the lowest numbered port in the group.

If you add a trunk group lead port to a VLAN, all of the ports in the trunk group become members of that VLAN.

Summary of VLAN configuration rules

A hierarchy of VLANs exists between the Layer 2 and Layer 3 protocol-based VLANs:

- Port-based VLANs are at the lowest level of the hierarchy.
- Layer 3 protocol-based VLANs, IP, IPv6, Decnet, and NetBIOS are at the middle level of the hierarchy.
- IP subnet VLANs are at the top of the hierarchy.

  NOTE
  You cannot have a protocol-based VLAN and a subnet or network VLAN of the same protocol type in the same port-based VLAN.

As a RUCKUS device receives packets, the VLAN classification starts from the highest level VLAN first. Therefore, if an interface is configured as a member of both a port-based VLAN and an IP protocol VLAN, IP packets coming into the interface are classified as members of the IP protocol VLAN because that VLAN is higher in the VLAN hierarchy.

Multiple VLAN membership rules

- A port can belong to multiple, unique, overlapping Layer 3 protocol-based VLANs without VLAN tagging.
- A port can belong to multiple, overlapping Layer 2 port-based VLANs only if the port is a tagged port. Packets sent out of a tagged port use an 802.1Q-tagged frame.
- When both port and protocol-based VLANs are configured on a given device, all protocol VLANs must be strictly contained within a port-based VLAN. A protocol VLAN cannot include ports from multiple port-based VLANs. This rule is required to ensure that port-based VLANs remain loop-free Layer 2 broadcast domains.
- IP protocol VLANs and IP subnet VLANs cannot operate concurrently on the system or within the same port-based VLAN.
- One of each type of protocol VLAN is configurable within each port-based VLAN on the Layer 2 Switch.
- Multiple IP subnet VLANs are configurable within each port-based VLAN on the Layer 2 Switch.
- Removing a configured port-based VLAN from a Ruckus Networks Layer 2 Switch or Layer 3 Switch automatically removes any protocol-based VLAN, IP subnet VLAN, or any Virtual Ethernet router interfaces defined within the Port-based VLAN.

Routing between VLANs

RUCKUS Layer 3 Switches can locally route IP between VLANs defined within a single router. All other routable protocols or protocol VLANs (for example, DecNet) must be routed by another external router capable of routing the protocol.

Virtual routing interfaces (Layer 2 Switches only)

You need to configure virtual routing interfaces if an IP VLAN, IP subnet VLAN needs to route protocols to another port-based VLAN on the same router. A virtual routing interface can be associated with the ports in only a single port-based VLAN. Virtual router interfaces must be defined at the highest level of the VLAN hierarchy.

If you do not need to further partition the port-based VLAN by defining separate Layer 3 VLANs, you can define a single virtual routing interface at the port-based VLAN level and enable IP routing on a single virtual routing interface.

Some configurations may require simultaneous switching and routing of the same single protocol across different sets of ports on the same router. When IP routing is enabled on a RUCKUS Layer 3 Switch, you can route these protocols on specific interfaces while bridging them on other interfaces. In this scenario, you can create two separate backbones for the same protocol, one bridged and one routed.

To bridge IP protocols, you need to configure an IP protocol, IP subnet VLAN and not assign a virtual routing interface to the VLAN. Packets for these protocols are bridged or switched at Layer 2 across ports on the router that are included in the Layer 3 VLAN. If these VLANs are built within port-

based VLANs, they can be tagged across a single set of backbone fibers to create separate Layer 2 switched and Layer 3 routed backbones for the same protocol on a single physical backbone.

Routing between VLANs using virtual routing interfaces (Layer 3 Switches only)

RUCKUS calls the ability to route between VLANs with virtual routing interfaces Integrated Switch Routing (ISR) . There are some important concepts to understand before designing an ISR backbone.

Virtual router interfaces can be defined on port-based, IP protocol, IP subnet VLANs.

To create any type of VLAN on a RUCKUS Layer 3 Switch, Layer 2 forwarding must be enabled. When Layer 2 forwarding is enabled, the Layer 3 Switch becomes a Switch on all ports for all non-routable protocols.

If the router interfaces for IP is configured on physical ports, then routing occurs independent of the Spanning Tree Protocol (STP). However, if the router interfaces are defined for any type VLAN, they are virtual routing interfaces and are subject to the rules of STP.

If your backbone consists of virtual routing interfaces all within the same STP domain, it is a bridged backbone, not a routed one. This means that the set of backbone interfaces that are blocked by STP will be blocked for routed protocols as well. The routed protocols will be able to cross these paths only when the STP state of the link is FORWARDING. This problem is easily avoided by proper network design.

When designing an ISR network, pay attention to your use of virtual routing interfaces and the spanning-tree domain. If Layer 2 switching of your routed protocols (IP) is not required across the backbone, then the use of virtual routing interfaces can be limited to edge switch ports within each router. Full backbone routing can be achieved by configuring routing on each physical interface that connects to the backbone. Routing is independent of STP when configured on a physical interface.

If your ISR design requires that you switch IP at Layer 2 while simultaneously routing the same protocols over a single backbone, then create multiple port-based VLANs and use VLAN tagging on the backbone links to separate your Layer 2 switched and Layer 3 routed networks.

There is a separate STP domain for each port-based VLAN. Routing occurs independently across port-based VLANs or STP domains. You can define each end of each backbone link as a separate tagged port-based VLAN. Routing will occur independently across the port-based VLANs. Because each port-based VLAN STP domain is a single point-to-point backbone connection, you are guaranteed to never have an STP loop. STP will never block the virtual router interfaces within the tagged port-based VLAN, and you will have a fully routed backbone.

Dynamic port assignment (Layer 2 Switches and Layer 3 Switches)

All Switch ports are dynamically assigned to any Layer 3 VLAN on RUCKUS Layer 2 Switches and any non-routable VLAN on RUCKUS Layer 3 Switches. To maintain explicit control of the VLAN, you can explicitly exclude ports when configuring any Layer 3 VLAN on a RUCKUS Layer 2 Switch or any non-routable Layer 3 VLAN on a RUCKUS Layer 3 Switch.

If you do not want the ports to have dynamic membership, you can add them statically. This eliminates the need to explicitly exclude the ports that you do not want to participate in a particular Layer 3 VLAN.

Assigning a Different VLAN ID to Default and Reserved VLANs

You can assign a different VLAN ID to default VLAN and to reserved VLANs. When you enable port-based VLANs, all ports in the system are added to the default VLAN. By default, the default VLAN ID is "VLAN 1".

The default VLAN is not configurable. If you want to use the VLAN ID "VLAN 1" as a configurable VLAN, you can assign a different VLAN ID to the default VLAN. You must specify a valid VLAN ID that is not already in use.

1. Enter global configuration mode.

```
device# configure terminal
```

2. Assign a different VLAN ID to the VLAN.
   - Assign a different VLAN ID to the default VLAN.

     ```
     device(config)# default-vlan-id 4095
     ```

     Reassigning a different VLAN ID to the default VLAN does not change the properties of the default VLAN, but allows you to use the VLAN ID "1" as a configurable VLAN.
   - Assign different VLAN IDs to reserved VLANs 4091 and 4092.

     ```
     device(config)# reserved-vlan-map vlan 4091 new-vlan 10
     device(config)# write memory
     device(config)# exit
     device# reload
     ```

     NOTE
     You must save and reload the configuration.

     In the example, the configuration changes the VLAN ID of 4091 to 10.

The following example shows how to assign VLAN ID to the default VLAN.

```
device# configure terminal
device(config)# default-vlan-id 4095
```

The following example shows how to assign VLAN ID to reserved VLANs.

```
device(config)# reserved-vlan-map vlan 4091 new-vlan 10
device(config)# write memory
device(config)# exit
device# reload
```

Viewing reassigned VLAN IDs for reserved VLANs 4091 and 4092

To view the assigned VLAN IDs for reserved VLANs 4091 and 4092, use the **show reserved-vlan-map** command. The reassigned VLAN IDs also display in the output of the **show running-config** and **show config** commands.

The following shows example output for the **show reserved-vlan-map** command.

```
device # show reserved-vlan-map
Reserved Purpose             Default        Re-assign        Current
  CPU VLAN                    4091             10              10
  All Ports VLAN              4092             33              33
```

The following table defines the fields in the output of the **show reserved-vlan-map** command.

TABLE 21 Output of the show reserved-vlan-map command

Field	Description
Reserved Purpose	Describes for what the VLAN is reserved. Note that the description is for RUCKUS internal VLAN management.
Default	The default VLAN ID of the reserved VLAN.
Re-assign	The VLAN ID to which the reserved VLAN was reassigned.[1]
Current	The current VLAN ID for the reserved VLAN.[1]

1. If you reassign a reserved VLAN without saving the configuration and reloading the software, the reassigned VLAN ID will display in the Re-assign column. However, the previously configured or default VLAN ID will display in the Current column until the configuration is saved and the device reloaded.

Assigning trunk group ports

When a "lead" trunk group port is assigned to a VLAN, all other members of the trunk group are automatically added to that VLAN. A lead port is the first port of a trunk group port range; for example, "1" in 1 - 4 or "5" in 5 - 8.

Enable spanning tree on a VLAN

The spanning tree bridge and port parameters are configurable using one CLI command set at the Global Configuration Level of each Port-based VLAN. Suppose you want to enable the IEEE 802.1D STP across VLAN 3. To do so, use the following method.

NOTE
When port-based VLANs are not operating on the system, STP is set on a system-wide level at the global CONFIG level of the CLI.

1. Access the global CONFIG level of the CLI on Device-A by entering the following commands.

```
device-A> enable
No password has been assigned yet...
device-A# configure terminal
device-A(config)#
```

2. Access the level of the CLI for configuring port-based VLAN 3 by entering the following command.

```
device-A(config)#
device-A(config)# vlan 3
device-A(config-vlan-3)#
```

3. From VLAN 3 configuration level of the CLI, enter the following command to enable STP on all tagged and untagged ports associated with VLAN 3.

```
device-B(config-vlan-3)#
device-B(config-vlan-3)# spanning-tree
device-B(config-vlan-3)#
```

4. Enter the following commands to exit the VLAN CONFIG mode and save the configuration to the system-config file on flash memory.

```
device-B(config-vlan-3)#
device-B(config-vlan-3)# end
device-B# write memory
device-B#
```

5. Repeat steps 1 - 4 on Device-B.

NOTE
You do not need to configure values for the STP parameters. All parameters have default values as noted below. Additionally, all values will be globally applied to all ports on the system or on the port-based VLAN for which they are defined.

To configure a specific path-cost or priority value for a given port, enter those values using the key words in the brackets [ ] shown in the syntax summary below. If you do not want to specify values for any given port, this portion of the command is not required.

Bridge STP parameters (applied to all ports within a VLAN):

- Forward Delay - the period of time a bridge will wait (the listen and learn period) before forwarding data packets. Possible values: 4 - 30 seconds. Default is 15.
- Maximum Age - the interval a bridge will wait for receipt of a hello packet before initiating a topology change. Possible values: 6 - 40 seconds. Default is 20.
- Hello Time - the interval of time between each configuration BPDU sent by the root bridge. Possible values: 1 - 10 seconds. Default is 2.

- Priority - a parameter used to identify the root bridge in a network. The bridge with the lowest value has the highest priority and is the root. Possible values: 1 - 65,535. Default is 32,678.

Port parameters (applied to a specified port within a VLAN):

- Path Cost - a parameter used to assign a higher or lower path cost to a port. Possible values: 1 - 65535. Default is (1000/Port Speed) for Half-Duplex ports and is (1000/Port Speed)/2 for Full-Duplex ports.
- Priority - value determines when a port will be rerouted in relation to other ports. Possible values: 0 - 255. Default is 128.

Enabling Port-Based VLANs and Tagging a Port to the VLAN

You can enable port-based VLAN at the global configuration mode and can assign 802.1Q tagging to a port that belongs to a VLAN.

You can configure up to 4000 port-based VLANs depending on the device support. Each port-based VLAN can contain either tagged or untagged ports. A port cannot be a member of more than one port-based VLAN unless the port is tagged.

1. Enter the global configuration mode.

   ```
   device# configure terminal
   ```

2. Configure a port-based VLAN using the **name** and **by port** keywords.

   ```
   device(config)#vlan 222 name Mktg by port
   ```

   Port-based VLAN 222 by the name "Mktg" is created.

3. Tag a port to the VLAN.

   ```
   device(config-vlan-222)# tagged ethernet 1/1/5
   ```

   NOTE
   Tagging does not apply to the default VLAN. The ports are defined as either tagged or untagged at the VLAN level.

The following example shows how to configure a port-based VLAN and tag a port to the VLAN.

```
device# configure terminal
device(config)#vlan 222 name Mktg by port
device(config-vlan-222)# tagged ethernet 1/1/5
```

Routing between VLANs using virtual routing interfaces (Layer 3 Switches only)

RUCKUS Layer 3 Switches offer the ability to create a virtual routing interface within a Layer 2 STP port-based VLAN. This combination of multiple Layer 2 or Layer 3 broadcast domains, or both, and virtual routing interfaces are the basis for Ruckus Networks' very powerful Integrated Switch Routing (ISR) technology. ISR is very flexible and can solve many networking problems. The following example is meant to provide ideas by demonstrating some of the concepts of ISR.

Suppose you want to move routing out to each of three buildings in a network. Remember that the only protocols present on VLAN 2 and VLAN 3 are IP. Therefore, you can eliminate tagged ports 1/1/25 and 1/1/26 from both VLAN 2 and VLAN 3 and create new tagged port-based VLANs to support separate IP subnets for each backbone link.

You also need to create unique IP subnets within VLAN 2 and VLAN 3 at each building. This will create a fully routed IP backbone for VLAN 2 and VLAN 3. However, VLAN 4 has no protocol restrictions across the backbone. In fact there are requirements for NetBIOS and DecNet to be bridged among the three building locations. The IP subnet that exists within VLAN 4 must remain a flat Layer 2 switched STP domain. You enable routing for

IP on a virtual routing interface only on Device-A. This will provide the flat IP segment with connectivity to the rest of the network. Within VLAN 4 IP will follow the STP topology. All other IP subnets will be fully routed and have use of all paths at all times during normal operation.

The following figure shows the configuration described above.

FIGURE 87 Routing between protocol-based VLANs

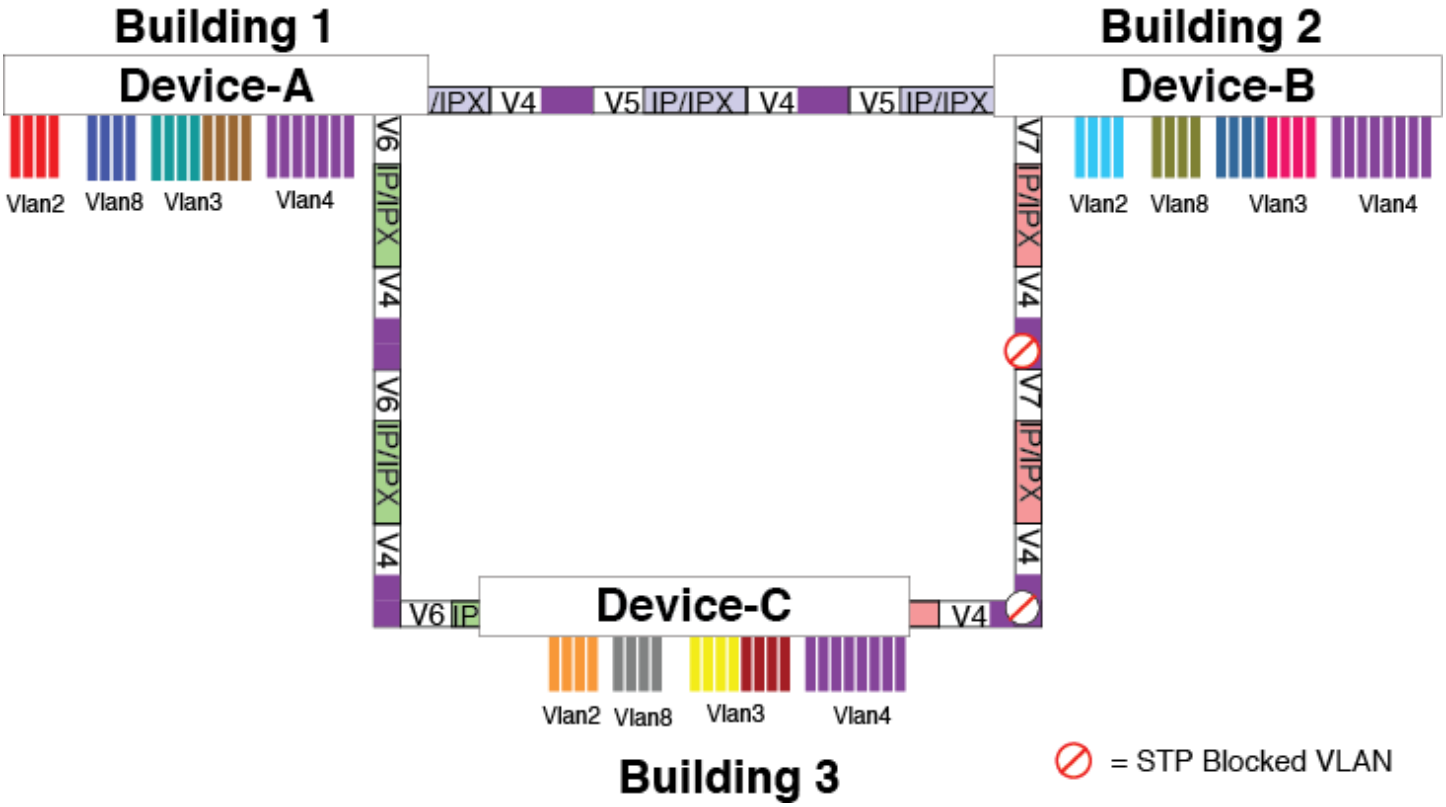

To configure the Layer 3 VLANs and virtual routing interfaces on the Layer 3 Switch in the above figure, use the following procedure.

Configuring Layer 3 VLANs and virtual routing interfaces on the Device-A

Enter the following commands to configure Device-A. The following commands enable OSPF or RIP routing.

```
device>enable
No password has been assigned yet...
device# configure terminal
device(config)# hostname Device-A
device-A(config)# router ospf
device-A(config-ospf-router)# area 0.0.0.0 normal
Please save configuration to flash and reboot.
device-A(config-ospf-router)#
```

The following commands create the port-based VLAN 2. In the previous example, an external device defined the router interfaces for VLAN 2. With ISR, routing for VLAN 2 is done locally within each device. Therefore, there are two ways you can solve this problem. One way is to create a unique IP subnet VLAN, each with its own virtual routing interface and unique IP address within VLAN 2 on each device. In this example, this is the configuration used for VLAN 3. The second way is to split VLAN 2 into two separate port-based VLANs and create a virtual router interface within each port-based VLAN. Later in this example, this second option is used to create a port-based VLAN 8 to show that there are multiple ways to accomplish the same task with ISR.

You also need to create the Other-Protocol VLAN within port-based VLAN 2 and 8 to prevent unwanted protocols from being Layer 2 switched within port-based VLAN 2 or 8. Note that the only port-based VLAN that requires STP in this example is VLAN 4. You will need to configure the rest of the network to prevent the need to run STP.

```
device-A(config-ospf-router)# vlan 2 name IP-Subnet_10.1.2.0/24
device-A(config-vlan-2)# untagged ethernet 1/1/1 to 1/1/4
device-A(config-vlan-2)# no spanning-tree
device-A(config-vlan-2)# router-interface ve1
device-A(config-vlan-2)# other-proto name block_other_protocols
device-A(config-vlan-other-proto)# no dynamic
device-A(config-vlan-other-proto)# exclude ethernet 1/1/1 to 1/1/4
```

Once you have defined the port-based VLAN and created the virtual routing interface, you need to configure the virtual routing interface just as you would configure a physical interface.

```
device-A(config-vlan-other-proto)# interface ve1
device-A(config-vif-1)# ip address 10.1.2.1/24
device-A(config-vif-1)# ip ospf area 0.0.0.0
```

Do the same thing for VLAN 8.

```
device-A(config-vif-1)# vlan 8 name Network2
device-A(config-vlan-8)# untagged ethernet 1/1/5 to 1/1/8
device-A(config-vlan-8)# no spanning-tree
device-A(config-vlan-8)# router-interface ve 2
device-A(config-vlan-8)# other-proto name block-other-protocols
device-A(config-vlan-other-proto)# no dynamic
device-A(config-vlan-other-proto)# exclude ethernet 1/1/5 to 1/1/8
device-A(config-vlan-other-proto)# interface ve2
device-A(config-vif-1)# ip address 10.1.2.2/24
device-A(config-vif-1)# ip ospf area 0.0.0.0
```

The next thing you need to do is create VLAN 3. This is very similar to the previous example with the addition of virtual routing interfaces to the IP subnet VLANs. Also there is no need to exclude ports from the IP subnet VLANs on the router.

```
device-A(config-vif-2)# vlan 3 name IP_Sub_&_Net_VLAN
device-A(config-vlan-3)# untagged ethernet 1/1/9 to 1/1/16
device-A(config-vlan-3)# no spanning-tree
device-A(config-vlan-3)# ip-subnet 10.1.1.0/24
device-A(config-vlan-ip-subnet)# static ethernet 1/1/9 to 1/1/12
device-A(config-vlan-ip-subnet)# router-interface ve3
device-A(config-vlan-ip-subnet)# other-proto name block-other-protocols
device-A(config-vlan-other-proto)# exclude ethernet 1/1/9 to 1/1/16
device-A(config-vlan-other-proto)# no dynamic
device-A(config-vlan-other-proto)# interface ve 3
device-A(config-vif-3)# ip addr 10.1.1.1/24
device-A(config-vif-3)# ip ospf area 0.0.0.0
```

Now configure VLAN 4. Remember this is a flat segment that, in the previous example, obtained its IP default gateway services from an external device. In this example, Device-A will provide the routing services for VLAN 4. You also want to configure the STP priority for VLAN 4 to make Device-A the root bridge for this VLAN.

```
device-A(config-vif-4)# vlan 4 name Bridged_ALL_Protocols
device-A(config-vlan-4)# untagged ethernet 1/1/17 to 1/1/24
device-A(config-vlan-4)# tagged ethernet 1/1/25 to 1/1/26
device-A(config-vlan-4)# spanning-tree
device-A(config-vlan-4)# spanning-tree priority 500
device-A(config-vlan-4)# router-interface ve5
device-A(config-vlan-4)# interface ve5
device-A(config-vif-5)# ip address 10.1.3.1/24
device-A(config-vif-5)# ip ospf area 0.0.0.0
```

It is time to configure a separate port-based VLAN for each of the routed backbone ports (Ethernet 1/1/25 and 1/1/26). If you do not create a separate tagged port-based VLAN for each point-to-point backbone link, you need to include tagged interfaces for Ethernet 1/1/25 and 1/1/26 within VLANs 2, 3, and 8. This type of configuration makes the entire backbone a single STP domain for each VLAN 2, 3, and 8. In this scenario, the

virtual routing interfaces within port-based VLANs 2, 3, and 8 will be accessible using only one path through the network. The path that is blocked by STP is not available to the routing protocols until it is in the STP FORWARDING state.

```
device-A(config-vif-5)# vlan 5 name Rtr_BB_to_Bldg.2
device-A(config-vlan-5)# tagged ethernet 1/1/25
device-A(config-vlan-5)# no spanning-tree
device-A(config-vlan-5)# router-interface ve6
device-A(config-vlan-5)# vlan 6 name Rtr_BB_to_Bldg.3
device-A(config-vlan-6)# tagged ethernet 1/1/26
device-A(config-vlan-6)# no spanning-tree
device-A(config-vlan-6)# router-interface ve7
device-A(config-vlan-6)# interface ve6
device-A(config-vif-6)# ip addr 10.1.4.1/24
device-A(config-vif-6)# ip ospf area 0.0.0.0
device-A(config-vif-6)# interface ve7
device-A(config-vif-7)# ip addr 10.1.5.1/24
device-A(config-vif-7)# ip ospf area 0.0.0.0
device-A(config-vif-7)#
```

This completes the configuration for Device-A. The configuration for Device-B and Device-C is very similar except for a few issues which are as follows:

- IP subnets configured on Device-B and Device-C must be unique across the entire network, except for the backbone port-based VLANs 5, 6, and 7 where the subnet is the same but the IP address must change.
- There is no need to change the default priority of STP within VLAN 4.
- There is no need to include a virtual router interface within VLAN 4.
- The backbone VLAN between Device-B and Device-C must be the same at both ends and requires a new VLAN ID. The VLAN ID for this port-based VLAN is VLAN 7.

Configuring Layer 3 VLANs and virtual routing interfaces for Device-B

Enter the following commands to configure Device-B.

```
device> enable
No password has been assigned yet...
device# config terminal
device(config)# hostname Device-B
device-B(config)# router ospf
device-B(config-ospf-router)# area 0.0.0.0 normal
device-B(config-ospf-router)# vlan 2 name IP-Subnet_10.1.6.0/24
device-B(config-vlan-2)# untagged ethernet 1/1/1 to 1/1/4
device-B(config-vlan-2)# no spanning-tree
device-B(config-vlan-2)# router-interface ve1
device-B(config-vlan-2)# other-proto name block-other-protocols
device-B(config-vlan-other-proto)# no dynamic
device-B(config-vlan-other-proto)# exclude ethernet 1/1/1 to 1/1/4
device-B(config-vlan-other-proto)# interface ve1
device-B(config-vif-1)# ip addr 10.1.6.1/24
device-B(config-vif-1)# ip ospf area 0.0.0.0
device-B(config-vif-1)# other-proto name block-other-protocols
device-B(config-vlan-other-proto)# no dynamic
device-B(config-vlan-other-proto)# exclude ethernet 1/1/5 to 1/1/8
device-B(config-vlan-other-proto)# interface ve2
device-B(config-vif-2)# vlan 3 name IP_Sub_&_Net_VLAN
device-B(config-vlan-3)# untagged ethernet 1/1/9 to 1/1/16
device-B(config-vlan-3)# no spanning-tree
device-B(config-vlan-3)# ip-subnet 10.1.7.0/24
device-B(config-vlan-ip-subnet)# static ethernet 1/1/9 to 1/1/12
device-B(config-vlan-ip-subnet)# router-interface ve3
device-B(config-vlan-ip-subnet)# other-proto name block-other-protocols
device-B(config-vlan-other-proto)# exclude ethernet 1/1/9 to 1/1/16
device-B(config-vlan-other-proto)# no dynamic
device-B(config-vlan-other-proto)# interface ve 3
device-B(config-vif-3)# ip addr 10.1.7.1/24
```

```
device-B(config-vif-3)# ip ospf area 0.0.0.0
device-B(config-vif-3)# interface ve4
device-B(config-vif-4)# vlan 4 name Bridged_ALL_Protocols
device-B(config-vlan-4)# untagged ethernet 1/1/17 to 1/1/24
device-B(config-vlan-4)# tagged ethernet 1/1/25 to 1/1/26
device-B(config-vlan-4)# spanning-tree
device-B(config-vlan-4)# vlan 5 name Rtr_BB_to_Bldg.1
device-B(config-vlan-5)# tagged ethernet 1/1/25
device-B(config-vlan-5)# no spanning-tree
device-B(config-vlan-5)# router-interface ve5
device-B(config-vlan-5)# vlan 7 name Rtr_BB_to_Bldg.3
device-B(config-vlan-7)# tagged ethernet 1/1/26
device-B(config-vlan-7)# no spanning-tree
device-B(config-vlan-7)# router-interface ve6
device-B(config-vlan-7)# interface ve5
device-B(config-vif-5)# ip addr 10.1.4.2/24
device-B(config-vif-5)# ip ospf area 0.0.0.0
device-B(config-vif-5)# interface ve6
device-B(config-vif-6)# ip addr 10.1.8.1/24
device-B(config-vif-6)# ip ospf area 0.0.0.0
device-B(config-vif-6)#
```

Configuring Layer 3 VLANs and virtual routing interfaces for Device-C

Enter the following commands to configure Device-C.

```
device> enable
No password has been assigned yet...
device# config terminal
device(config)# hostname Device-C
device-C(config)# router ospf
device-C(config-ospf-router)# area 0.0.0.0 normal
device-C(config-ospf-router)# vlan 2 name IP-Subnet_10.1.9.0/24
device-C(config-vlan-2)# untagged ethernet 1/1/1 to 1/1/4
device-C(config-vlan-2)# no spanning-tree
device-C(config-vlan-2)# router-interface ve1
device-C(config-vlan-2)# other-proto name block-other-protocols
device-C(config-vlan-other-proto)# no dynamic
device-C(config-vlan-other-proto)# exclude ethernet 1/1/1 to 1/1/4
device-C(config-vlan-other-proto)# interface ve1
device-C(config-vif-1)# ip addr 10.1.9.1/24
device-C(config-vif-1)# ip ospf area 0.0.0.0
device-C(config-vif-1)# vlan 8 name Network9
device-C(config-vlan-8)# untagged ethernet 1/1/5 to 1/1/8
device-C(config-vlan-8)# no span
device-C(config-vlan-8)# router-interface ve2
device-C(config-vlan-8)# other-proto name block-other-protocols
device-C(config-vlan-other-proto)# no dynamic
device-C(config-vlan-other-proto)# exclude ethernet 1/1/5 to 1/1/8
device-C(config-vlan-other-proto)# interface ve2
device-C(config-vif-1)# ip addr 10.1.9.2/24
device-C(config-vif-1)# ip ospf area 0.0.0.0
device-C(config-vif-2)# vlan 3 name IP_Sub_&_Net_VLAN
device-C(config-vlan-3)# untagged ethernet 1/1/9 to 1/1/16
device-C(config-vlan-3)# no spanning-tree
device-C(config-vlan-3)# ip-subnet 10.1.10.0/24
device-C(config-vlan-ip-subnet)# static ethernet 1/1/9 to 1/1/12
device-C(config-vlan-ip-subnet)# router-interface ve3
device-C(config-vlan-ip-subnet)# other-proto name block-other-protocols
device-C(config-vlan-other-proto)# exclude ethernet 1/1/9 to 1/1/16
device-C(config-vlan-other-proto)# no dynamic
device-C(config-vlan-other-proto)# interface ve 3
device-C(config-vif-3)# ip addr 10.1.10.1/24
device-C(config-vif-3)# ip ospf area 0.0.0.0
device-C(config-vif-3)# interface ve4
device-C(config-vif-4)# vlan 4 name Bridged_ALL_Protocols
device-C(config-vlan-4)# untagged ethernet 1/1/17 to 1/1/24
device-C(config-vlan-4)# tagged ethernet 1/1/25 to 1/1/26
device-C(config-vlan-4)# spanning-tree
```

```
device-C(config-vlan-4)# vlan 7 name Rtr_BB_to_Bldg.2
device-C(config-vlan-7)# tagged ethernet 1/1/25
device-C(config-vlan-7)# no spanning-tree
device-C(config-vlan-7)# router-interface ve5
device-C(config-vlan-7)# vlan 6 name Rtr_BB_to_Bldg.1
device-C(config-vlan-6)# tagged ethernet 1/1/26
device-C(config-vlan-6)# no spanning-tree
device-C(config-vlan-6)# router-interface ve6
device-C(config-vlan-6)# interface ve5
device-C(config-vif-5)# ip addr 10.1.8.2/24
device-C(config-vif-5)# ip ospf area 0.0.0.0
device-C(config-vif-5)# interface ve6
device-C(config-vif-6)# ip addr 10.1.5.2/24
device-C(config-vif-6)# ip ospf area 0.0.0.0
device-C(config-vif-6)#
```

VLAN and VE pre-provisioning

Create VLAN without ports feature creates VLAN and puts it in INUSE mode, once you configure the VLAN. This allows applications to configure any feature under VLAN even before adding ports to it.

Some features needs to change VLAN control settings in the hardware when they are configured. So if VLAN is present even before adding ports to it, you should be able to program VLAN control settings when you are configuring the feature under VLAN. You can retain the software configuration and the hardware VLAN control settings even after removing all the ports from the VLAN.

You can remove all the ports from a port-based VLAN without losing the rest of the VLAN configuration. However, you cannot configure an IP address on a virtual routing interface unless the VLAN contains ports. If the VLAN has a virtual routing interface, the virtual routing interface IP address is deleted when the ports associated with the interface are deleted. The rest of the VLAN configuration is retained. Ports cannot be moved from or moved to a private VLAN.

Following are few limitations:

- In MRP, ring-interface configuration is not allowed when ports are not part of the VLAN. Ring-interfaces configuration will be lost when all ports removed from VLAN.
- Enabling UDLD for tagged ports requires port to be part of VLAN. Removal of all ports from the VLAN is not allowed when UDLD is enabled on tagged ports.
- Port based IGMP and MLD are not supported.
- In MCT, you can configure keep-alive and session VLANs configuration under cluster configuration, without having any ports in VLAN. However, ICL configuration mandates to have ports in the session VLAN.
- Once MCT cluster is deployed, you are not allowed to remove ports from either session or keep-alive VLANs. You must un-deploy the cluster if there is any change of ports in session or keep-alive VLANs.
- You are allowed to remove all ports from MCT-VLAN but have to deploy the client again after adding ports back to MCT-VLAN.

Sample configuration

Following is a sample configuration for creating VLAN without ports.

```
device(config)#vlan 500
device(config-vlan-500)#int ve 500
device(config-vif-500)#ip address 3.3.3.3/8
device(config-vif-500)#sh run vlan 500
vlan 500 by port
 router-interface ve 500
!
device(config-vif-500)#sh run int ve 500
interface ve 500
 ip address 3.3.3.3 255.0.0.0
```

NOTE

When there are no ports in the VLAN with VE interface configured in it, the interface status is show as DOWN.

```
device(config-vif-34)#show int ve 34
ve34 is down, line protocol is down
```

When an active port is added to the related VLAN, the VE interface status is shown as UP.

```
device(config-vlan-34)#show int ve 34
ve34 is up, line protocol is up
```

Pre-provisioning ACL on a VE

The support for VE without ports in VLAN allows you to configure the ACL on the VE interface. As VE is attached to a VLAN without ports, the hardware realization will not happen with this feature, with ACL applied on VE.

With the VLAN without ports feature, both VLAN and VE (if configured) is active and valid even without ports. Hence any security or ACL feature allows configuration on VE or under VLAN and store them in software data structure, without realizing configuration in TCAM.

When first port is added to VLAN, you must program the hardware for that port if anything was applied on VE or under VLAN before adding the port. Similarly, while deleting last port from the VLAN, you should retain the ACL configuration in the software data structure that was earlier applied on VE or under VLAN as you will not have anything applied in hardware as there was no port in VLAN.

The VLAN without ports feature allows CLIs which take physical or lag ports with no membership in the VLAN, as parameter. Following is an example of the capability.

```
device(config)#show run vlan 1000
vlan 1000 by port
router-interface ve 1000
!
device(config-vlan-1000)#source-guard en
enable   Config IP Source-Guard
spx-2(config-vlan-1000)#source-guard enable

device(config)#show run vlan 1000
vlan 1000 by port
 source-guard enable
 router-interface ve 1000
!
spx-2(config)#int ve 1000
spx-2(config-vif-1000)#ip acc 100 in
spx-2(config-vif-1000)#ex
spx-2(config)#show run int ve 1000
interface ve 1000
 ip access-group 100 in
!
```

VLAN-based static MAC entries configuration

You can configure a VLAN to drop packets that have a particular source or destination MAC address.

You can configure a maximum of 2048 static MAC address drop entries on a RUCKUS device.

Use the CLI command **show running-config** to view the static MAC address drop entries currently configured on the device.

Configuring a VLAN to drop static MAC entries

To configure a VLAN to drop packets with a source or destination MAC address of 0000.0063.67FF, enter the following commands.

```
device(config)#vlan 2
device(config-vlan-2)#static-mac-address 0000.0063.67FF drop
```

IP subnet address on multiple port-based VLAN configuration

For a RUCKUS device to route between port-based VLANs, you must add a virtual routing interface to each VLAN. Generally, you also configure a unique IP subnet address on each virtual routing interface. For example, if you have three port-based VLANs, you add a virtual routing interface to each VLAN, then add a separate IP subnet address to each virtual routing interface. The IP address on each of the virtual routing interfaces must be in a separate subnet. The RUCKUS device routes Layer 3 traffic between the subnets using the subnet addresses.

NOTE
This feature applies only to Layer 3 Switches.

NOTE
Before using the method described in this section, refer to VLAN groups and virtual routing interface group on page 273. You might be able to achieve the results you want using the methods in that section instead.

The following figure shows an example of this type of configuration.

FIGURE 88 Multiple port-based VLANs with separate protocol addresses

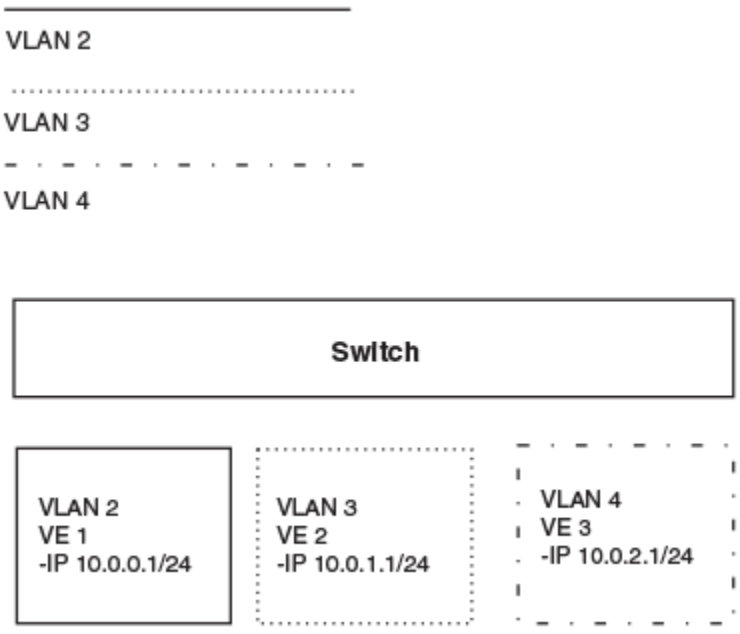

As shown in this example, each VLAN has a separate IP subnet address. If you need to conserve IP subnet addresses, you can configure multiple VLANs with the same IP subnet address, as shown in the following figure.

FIGURE 89 Multiple port-based VLANs with the same protocol address

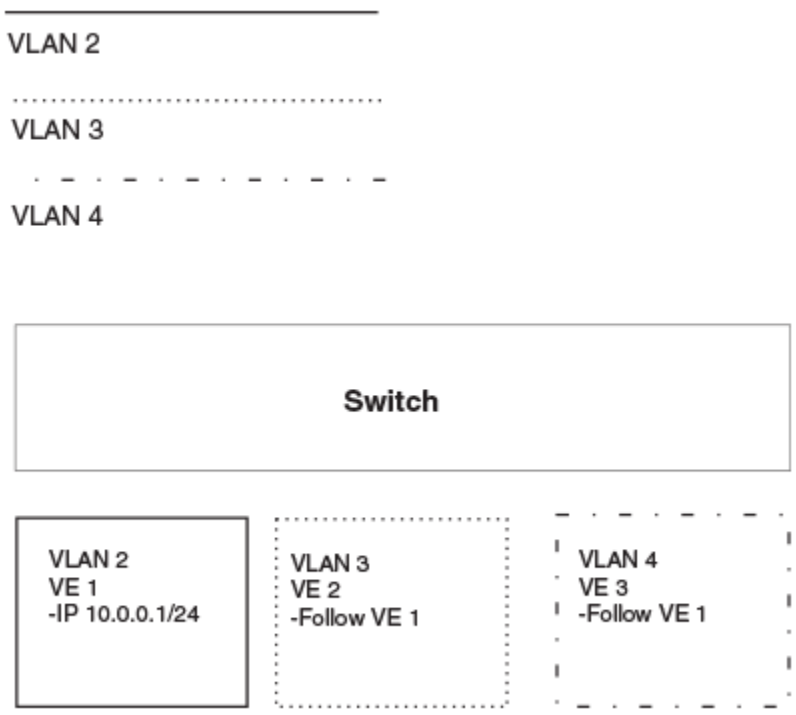

Each VLAN still requires a separate virtual routing interface. However, all three VLANs now use the same IP subnet address.

In addition to conserving IP subnet addresses, this feature allows containment of Layer 2 broadcasts to segments within an IP subnet. For ISP environments where the same IP subnet is allocated to different customers, placing each customer in a separate VLAN allows all customers to share the IP subnet address, while at the same time isolating them from one another Layer 2 broadcasts.

NOTE
You can provide redundancy to an IP subnet address that contains multiple VLANs using a pair of RUCKUS Layer 3 Switches configured for RUCKUS VRRP (Virtual Router Redundancy Protocol).

The RUCKUS device performs proxy Address Resolution Protocol (ARP) for hosts that want to send IP traffic to hosts in other VLANs that are sharing the same IP subnet address. If the source and destination hosts are in the same VLAN, the RUCKUS device does not need to use ARP:

- If a host attached to one VLAN sends an ARP message for the MAC address of a host in one of the other VLANs using the same IP subnet address, the RUCKUS device performs a proxy ARP on behalf of the other host. The RUCKUS device then replies to the ARP by sending the virtual routing interface MAC address. The RUCKUS device uses the same MAC address for all virtual routing interfaces.When the host that sent the ARP then sends a unicast packet addressed to the virtual routing interface MAC address, the device switches the packet on Layer 3 to the destination host on the VLAN.

  NOTE
  If the RUCKUS device ARP table does not contain the requested host, the RUCKUS device forwards the ARP request on Layer 2 to the same VLAN as the one that received the ARP request. Then the device sends an ARP for the destination to the other VLANs that are using the same IP subnet address.

- If the destination is in the same VLAN as the source, the RUCKUS device does not need to perform a proxy ARP.

To configure multiple VLANs to use the same IP subnet address:

- Configure each VLAN, including adding tagged or untagged ports.
- Configure a separate virtual routing interface for each VLAN, but do not add an IP subnet address to more than one of the virtual routing interfaces.
- Configure the virtual routing interfaces that do not have the IP subnet address to "follow" the virtual routing interface that does have the address.

To configure the VLANs shown in Figure 89, you could enter the following commands.

```
device(config)# vlan 1 by port
device(config-vlan-1)# untagged ethernet 1/1/1
device(config-vlan-1)# tagged ethernet 1/1/8
device(config-vlan-1)# router-interface ve 1
```

The commands above configure port-based VLAN 1. The VLAN has one untagged port (1/1/1) and a tagged port (1/1/8). In this example, all three VLANs contain port 1/1/8 so the port must be tagged to allow the port to be in multiple VLANs. You can configure VLANs to share a Layer 3 protocol interface regardless of tagging. A combination of tagged and untagged ports is shown in this example to demonstrate that sharing the interface does not change other VLAN features.

Notice that each VLAN still requires a unique virtual routing interface.

The following commands configure port-based VLANs 2 and 3.

```
device(config-vlan-1)# vlan 2 by port
device(config-vlan-2)# untagged ethernet 1/1/2
device(config-vlan-2)# tagged ethernet 1/1/8
device(config-vlan-2)# router-interface ve 2
device(config-vlan-2)# vlan 3 by port
device(config-vlan-3)# untagged ethernet 1/1/5 to 1/1/6
device(config-vlan-3)# tagged ethernet 1/1/8
device(config-vlan-3)# router-interface ve 3
```

The following commands configure an IP subnet address on virtual routing interface 1.

```
device(config-vlan-3)# interface ve 1
device(config-vif-1)# ip address 10.0.0.1/24
```

The following commands configure virtual routing interfaces 2 and 3 to "follow" the IP subnet address configured on virtual routing interface 1.

```
device(config-vif-1)# interface ve 2
device(config-vif-2)# ip follow ve 1
device(config-vif-2)# interface ve 3
device(config-vif-3)# ip follow ve 1
```

VLAN groups and virtual routing interface group

To simplify configuration when you have many VLANs with the same configuration, you can configure VLAN groups and virtual routing interface groups.

NOTE
VLAN groups are supported on Layer 3 Switches and Layer 2 Switches. Virtual routing interface groups are supported only on Layer 3 Switches.

When you create a VLAN group, the VLAN parameters you configure for the group apply to all the VLANs within the group. Additionally, you can easily associate the same IP subnet interface with all the VLANs in a group by configuring a virtual routing interface group with the same ID as the VLAN group.

- The VLAN group feature allows you to create multiple port-based VLANs with identical port members. Because the member ports are shared by all the VLANs within the group, you must add the ports as tagged ports. This feature not only simplifies VLAN configuration but also allows you to have a large number of identically configured VLANs in a startup-config file on the device flash memory module. Normally, a startup-config file with a large number of VLANs might not fit on the flash memory module. By grouping the identically configured VLANs, you can conserve space in the startup-config file so that it fits on the flash memory module.
- The virtual routing interface group feature is useful when you want to configure the same IP subnet address on all the port-based VLANs within a VLAN group. You can configure a virtual routing interface group only after you configure a VLAN group with the same ID. The virtual routing interface group automatically applies to the VLANs in the VLAN group that has the same ID and cannot be applied to other VLAN groups or to individual VLANs.

You can create up to 32 VLAN groups and 32 virtual routing interface groups. A virtual routing interface group always applies only to the VLANs in the VLAN group with the same ID.

NOTE
Depending on the size of the VLAN ID range you want to use for the VLAN group, you might need to allocate additional memory for VLANs. On Layer 3 Switches, if you allocate additional memory for VLANs, you also need to allocate the same amount of memory for virtual routing interfaces. This is true regardless of whether you use the virtual routing interface groups. To allocate additional memory, refer to Allocating Memory for More VLANs, More Associated ports, or More Virtual Routing Interfaces on page 276.

NOTE

Configuring a VLAN Group

You can configure a VLAN group and add or remove individual VLANs or a range of VLANs from the VLAN group.

Beginning with FastIron 08.0.80, configuring dual-mode with untagged VLAN as VLAN group member VLAN on VLAN group member interfaces is not allowed. You can configure the VLAN group member interface as untagged in any other VLAN, but not in VLAN group member VLANs.

1. Enter global configuration mode.

```
device# configure terminal
```

2. Configure a VLAN group.

```
device(config)# vlan-group 1 vlan 2 to 257
```

   In the example, VLAN group 1 is configured and VLANs from 2 through 257 are assigned to the VLAN group.

3. Add individual VLANs or a range of VLANs.

```
device(config)# vlan-group 2 vlan 1000 to 1250
device(config-vlan-group-2)# add-vlan 1251 to 1500
device(config-vlan-group-2)# add-vlan 1501 to 1750
```

   To add more than 256 VLANs, use the **add-vlan** command from the interface configuration mode.

4. (Optional) Remove individual VLANs or a range of VLANs.

```
device(config-vlan-group-2)# remove-vlan 900 to 1000
```

   To remove more than 256 VLANs, use the **remove-vlan** command from the interface configuration mode.

5. Add ports to the VLAN group.

```
device(config-vlan-group-2)# tagged 1/1/1 to 1/1/2
```

   Ports 1/1/1 and 1/1/2 are added as tagged ports for the VLAN group.

The following example shows how to configure a VLAN group.

```
device# configure terminal
device(config)#vlan-group 2 vlan 1000 to 1250
device(config-vlan-group-2)#add-vlan 1251 to 1500
device(config-vlan-group-2)# remove-vlan 900 to 1000
device(config-vlan-group-2)# tagged 1/1/1 to 1/1/2
```

Displaying information about VLAN groups

To display VLAN group configuration information, use the **show vlan-group** command.

```
device# show vlan-group
vlan-group 1 vlan 2 to 20
 tagged ethernet 1/1/1 to 1/1/2
!
vlan-group 2 vlan 21 to 40
 tagged ethernet 1/1/1 to 1/1/2
!
```

The *group-id* parameter is not specified, the configuration information for all the configured VLAN groups is displayed.

Configuring a Virtual Routing Interface Group

You can configure a virtual routing interface group using the **group-router-interface** command.

A virtual routing interface group allows you to associate the same IP subnet interface with multiple port-based VLANs. For example, if you associate a virtual routing interface group with a VLAN group, all the VLANs in the group have the IP interface of the virtual routing interface group.

1. Enter global configuration mode.

```
device# configure terminal
```

2. Configure a VLAN group.

```
device(config)# vlan-group 1
```

   The VLAN group must be preconfigured and enabled to use a virtual routing interface group.

3. Enable VLAN group to use a virtual routing interface group.

```
device(config-vlan-group-1)# group-router-interface
```

   The **group-router-interface** command enables a VLAN group to use a virtual routing interface group. The software automatically associates a virtual routing interface group only with the VLAN group that has the same ID.

4. Exit VLAN configuration mode.

```
device(config-vlan-group-1)# exit
```

5. Associate the virtual interface routing group with a VLAN group from the interface configuration mode.

```
device(config)# interface group-ve 1
```

NOTE
IPv6 is not supported with **group-ve**.

NOTE
FastIron devices support group-ve with OSPF, VRRP v2, and VRRP-E v2 protocols only

The following example shows how to configure a virtual routing interface group.

```
device# configure terminal
device(config)# vlan-group 1
device(config-vlan-group-1)# group-router-interface
device(config-vlan-group-1)# exit
device(config)# interface group-ve 1
```

Configuration notes and feature limitations for virtual routing interface group

- When you configure a virtual routing interface group, all members of the group have the same IP subnet address. This feature is useful in collocation environments where the device has many IP addresses and you want to conserve the IP address space.
- The **group-router-interface** command creates router interfaces for each VLAN in the VLAN group by using the VLAN IDs of each of the VLANs as the corresponding virtual interface number. Therefore, if a VLAN group contains VLAN IDs greater than the maximum virtual interface number allowed, the **group-router-interface** command will be rejected.

Displaying the VLAN group and virtual routing interface group information

To verify configuration of VLAN groups and virtual routing interface groups, display the running-config file. If you have saved the configuration to the startup-config file, you also can verify the configuration by displaying the startup-config file. The following example shows the running-config information for the VLAN group and virtual routing interface group configured in the previous examples. The information appears in the same way in the startup-config file.

```
device# show running-config
lines not related to the VLAN group omitted...
vlan-group 1 vlan 2 to 20
 add-vlan 1001 to 1002
 tagged ethe 1/1/1 to 1/1/2
 router-interface-group
lines not related to the virtual routing interface group omitted...
interface group-ve 1
 ip address 10.10.10.1 255.255.255.0
```

NOTE
If you have enabled display of subnet masks in CIDR notation, the IP address information is shown as follows: 10.10.10.1/24.

Allocating Memory for More VLANs, More Associated ports, or More Virtual Routing Interfaces

RUCKUS Layer 2 and Layer 3 switches support up to 4095 VLANs. In addition, ICX 7650 and ICX 7850 support 512 virtual routing interfaces and all other ICX 7xxx platforms support 256 VEs.

The number of VLANs, associated ports, and virtual routing interfaces supported on your product depends on the device. The following table lists the default and configurable maximum numbers of VLANs and virtual routing interfaces for Layer 2 and Layer 3 switches. Unless otherwise noted, the values apply to both types of switches.

NOTE
A minimum value of 5 must be configured when configuring **system-max vlan**.

TABLE 22 VLAN, VPORT, and Virtual Routing Interface Support

VLANs		VPORTs		Virtual routing interfaces	
Default maximum	Configurable maximum	Default maximum	Configurable maximum	Default maximum	Configurable maximum
1024	4094	8,192	524,032	255	512

NOTE
If many of your VLANs will have an identical configuration, you might want to configure VLAN groups and virtual routing interface groups after you increase the system capacity for VLANs and virtual routing interfaces. Refer to VLAN groups and virtual routing interface group on page 273.

Increasing the Number of Configurable VLANs or Port-to-VLAN Associations or Virtual Routing Interfaces

You can increase the maximum number of VLANs or port-to-VLAN associations or virtual routing interfaces that can be configured.

You can specify up to 4095 VLANs, however, you can configure only 4094 VLANs. VLAN ID 4094 is reserved for use by the Single Spanning Tree feature.

VPORT entries are created in the software database for each port association to a VLAN. The default VPORT limit is 64. By default, this limits port-to-VLAN associations to 8,192 (Max VLANs * MAX ports per VLAN, or 64 * 128).

1. Enter global configuration mode.

```
device# configure terminal
```

2. Increase the maximum number of VLANs or port-to-VLAN associations.

```
device (config)# system-max vlan 4094
device(config)# write memory
device(config)# end
device# reload
```

In the example, the available port-to-VLAN associations is increased to more than 524,000 entries. The **num** parameter indicates the maximum number of VLANs. The range of valid values depends on the device you are configuring. Refer to Table 22 on page 277.

NOTE
The **system-max** default VLAN is increased from 64 through 1024. Hence the default VPORT limit is no more equal to the default MAX VLAN setting.

3. Increase the maximum number of virtual routing interfaces.

```
device(config)# system-max virtual-interface 1024
device(config)# write memory
device(config)# end
device# reload
```

The **num** parameter indicates the maximum number of virtual routing interfaces. The range of valid values depends on the device you are configuring. Refer to Table 22 on page 277.

Topology groups

A topology group is a named set of VLANs that share a Layer 2 topology. Topology groups simplify configuration and enhance scalability of Layer 2 protocols by allowing you to run a single instance of a Layer 2 protocol on multiple VLANs.

You can use topology groups with the following Layer 2 protocols:

- STP/RSTP
- MRP
- VSRP
- 802.1W

Topology groups simplify Layer 2 configuration and provide scalability by enabling you to use the same instance of a Layer 2 protocol for multiple VLANs. For example, if a RUCKUS device is deployed in a Metro network and provides forwarding for two MRP rings that each contain 128 VLANs, you can configure a topology group for each ring. If a link failure in a ring causes a topology change, the change is applied to all the VLANs in the ring topology group. Without topology groups, you would need to configure a separate ring for each VLAN.

Master VLAN and member VLANs

Each topology group contains a master VLAN and can contain one or more member VLANs and VLAN groups:

- Master VLAN - The master VLAN contains the configuration information for the Layer 2 protocol. For example, if you plan to use the topology group for MRP, the topology group master VLAN contains the ring configuration information.
- Member VLANs - The member VLANs are additional VLANs that share ports with the master VLAN. The Layer 2 protocol settings for the ports in the master VLAN apply to the same ports in the member VLANs. A change to the master VLAN Layer 2 protocol configuration or Layer 2 topology affects all the member VLANs. Member VLANs do not independently run a Layer 2 protocol.
- Member VLAN groups - A VLAN group is a named set of VLANs. The VLANs within a VLAN group have the same ports and use the same values for other VLAN parameters.

When a Layer 2 topology change occurs on a port in the master VLAN, the same change is applied to that port in all the member VLANs that contain the port. For example, if you configure a topology group whose master VLAN contains ports 1/1/1 and 1/1/2, a Layer 2 state change on port 1/1/1 applies to port 1/1/1 in all the member VLANs that contain that port. However, the state change does not affect port 1/1/1 in VLANs that are not members of the topology group.

Control ports and free ports

A port that is in a topology group can be a control port or a free port:

- Control port - A control port is a port in the master VLAN, and is therefore controlled by the Layer 2 protocol configured in the master VLAN. The same port in all the member VLANs is controlled by the master VLAN Layer 2 protocol. Each member VLAN must contain all of the control ports and can contain additional ports.
- Free port - A free port is not controlled by the master VLAN Layer 2 protocol. The master VLAN can contain free ports. (In this case, the Layer 2 protocol is disabled on those ports.) In addition, any ports in the member VLANs that are not also in the master VLAN are free ports.

  NOTE
  Since free ports are not controlled by the master port Layer 2 protocol, they are assumed to always be in the Forwarding state.

Topology group configuration considerations

- You must configure the master VLAN and member VLANs or member VLAN groups before you configure the topology group.
- You can configure up to 30 topology groups. Each group can control up to 4096 VLANs. A VLAN cannot be controlled by more than one topology group.
- The topology group must contain a master VLAN and can also contain individual member VLANs, VLAN groups, or a combination of individual member VLANs and VLAN groups.

- If you add a new master VLAN to a topology group that already has a master VLAN, the new master VLAN replaces the older master VLAN. All member VLANs and VLAN groups follow the Layer 2 protocol settings of the new master VLAN.
- If you remove the master VLAN (by entering **no master-vlan** *vlan-id*), the software selects the new master VLAN from member VLANs. A new candidate master VLAN will be in configured order to a member VLAN so that the first added member VLAN will be a new candidate master VLAN. Once you save and reload, a member-vlan with the youngest VLAN ID will be the new candidate master. The new master VLAN inherits the Layer 2 protocol settings of the older master VLAN.
- The topology group will be deleted if the master is deleted and there are no member VLANs. This is true even if the topology group has member-groups.
- Once you add a VLAN as a member of a topology group, all the Layer 2 protocol information on the VLAN is deleted.
- A default VLAN cannot be a member of a topology group.
- MRP master node has to be un-configured (**no master-vlan** command) prior to changing the master VLAN of a topology group where this MRP instance is part of. This action prevents MRP BPDU hardware flooding which can result in MRP continuous state flap.

Configuring a Topology Group

You can configure a topology group with a master VLAN. You can add member VLANs and VLAN groups to the master VLAN.

A topology group can have only one master VLAN. The master VLAN must be already configured before it is added to the topology group.

Once you add a VLAN or VLAN group as a member of a topology group, all the Layer 2 protocol configuration information for the VLAN or VLAN group is deleted and uses the Layer 2 protocol settings of the master VLAN instead.

If you remove a member VLAN or VLAN group from a topology group, you will need to reconfigure the Layer 2 protocol information in the VLAN or VLAN group.

1. Enter global configuration mode.

```
device# configure terminal
```

2. Configure a topology group.

```
device(config)# topology-group 2
```

3. Add a master VLAN to the topology group.

```
device(config-topo-group-2)# master-vlan 2
```

4. Add a member VLAN to the topology group.

```
device(config-topo-group-2)# member-vlan 3
```

5. Add a member VLAN group to the topology group.

```
device(config-topo-group-2)#member-group 2
```

The following example shows how to configure a topology group and add member VLANs and VLAN groups to the topology group.

```
device# configure terminal
device(config)#topology-group 2
device(config-topo-group-2)#master-vlan 2
device(config-topo-group-2)#member-vlan 3
device(config-topo-group-2)#member-group 2
```

Displaying STP information

To display STP information for a VLAN, enter a command such as the following.

```
device#show span vlan 4
VLAN 4 BPDU cam_index is 14344 and the Master DMA Are(HEX) 18 1A
STP instance owned by VLAN 2
```

This example shows STP information for VLAN 4. The line shown in bold type indicates that the VLAN STP configuration is controlled by VLAN 2. This information indicates that VLAN 4 is a member of a topology group and VLAN 2 is the master VLAN in that topology group.

Displaying topology group information

To display topology group information, enter the following command.

```
device#show topology-group
Topology Group 3
================
 master-vlan 2
 member-vlan none
 Common control ports           L2 protocol
 ethernet 1/1/1                 MRP
 ethernet 1/1/2                 MRP
 ethernet 1/1/5                 VSRP
 ethernet 1/2/22                VSRP
 Per vlan free ports
 ethernet 1/2/3                 Vlan 2
 ethernet 1/2/4                 Vlan 2
 ethernet 1/2/11                Vlan 2
 ethernet 1/2/12                Vlan 2
```

This display shows the following information.

TABLE 23 CLI display of topology group information

Field	Description
master-vlan	The master VLAN for the topology group. The settings for STP, MRP, or VSRP on the control ports in the master VLAN apply to all control ports in the member VLANs within the topology group.
member-vlan	The member VLANs in the topology group.
Common control ports	The master VLAN ports that are configured with Layer 2 protocol information. The Layer 2 protocol configuration and state of these ports in the master VLAN applies to the same port numbers in all the member VLANs.
L2 protocol	The Layer 2 protocol configured on the control ports. The Layer 2 protocol can be one of the following: • MRP • STP • VSRP
Per vlan free ports	The ports that are not controlled by the Layer 2 protocol information in the master VLAN.

Super-aggregated VLAN configuration

You can aggregate multiple VLANs within another VLAN. This feature allows you to construct Layer 2 paths and channels. This feature is particularly useful for Virtual Private Network (VPN) applications in which you need to provide a private, dedicated Ethernet connection for an individual client to transparently reach its subnet across multiple networks.

Conceptually, the paths and channels are similar to Asynchronous Transfer Mode (ATM) paths and channels. A path contains multiple channels, each of which is a dedicated circuit between two end points. The two devices at the end points of the channel appear to each other to be directly attached. The network that connects them is transparent to the two devices.

You can aggregate up to 4094 VLANs within another VLAN. This provides a total VLAN capacity on one RUCKUS device of 16,760,836 channels (4094 * 4094).

The devices connected through the channel are not visible to devices in other channels. Therefore, each client has a private link to the other side of the channel.

The feature allows point-to-point and point-to-multipoint connections.

The following figure shows a conceptual picture of the service that aggregated VLANs provide. Aggregated VLANs provide a path for multiple client channels. The channels do not receive traffic from other channels. Thus, each channel is a private link.

FIGURE 90 Conceptual model of the super aggregated VLAN application

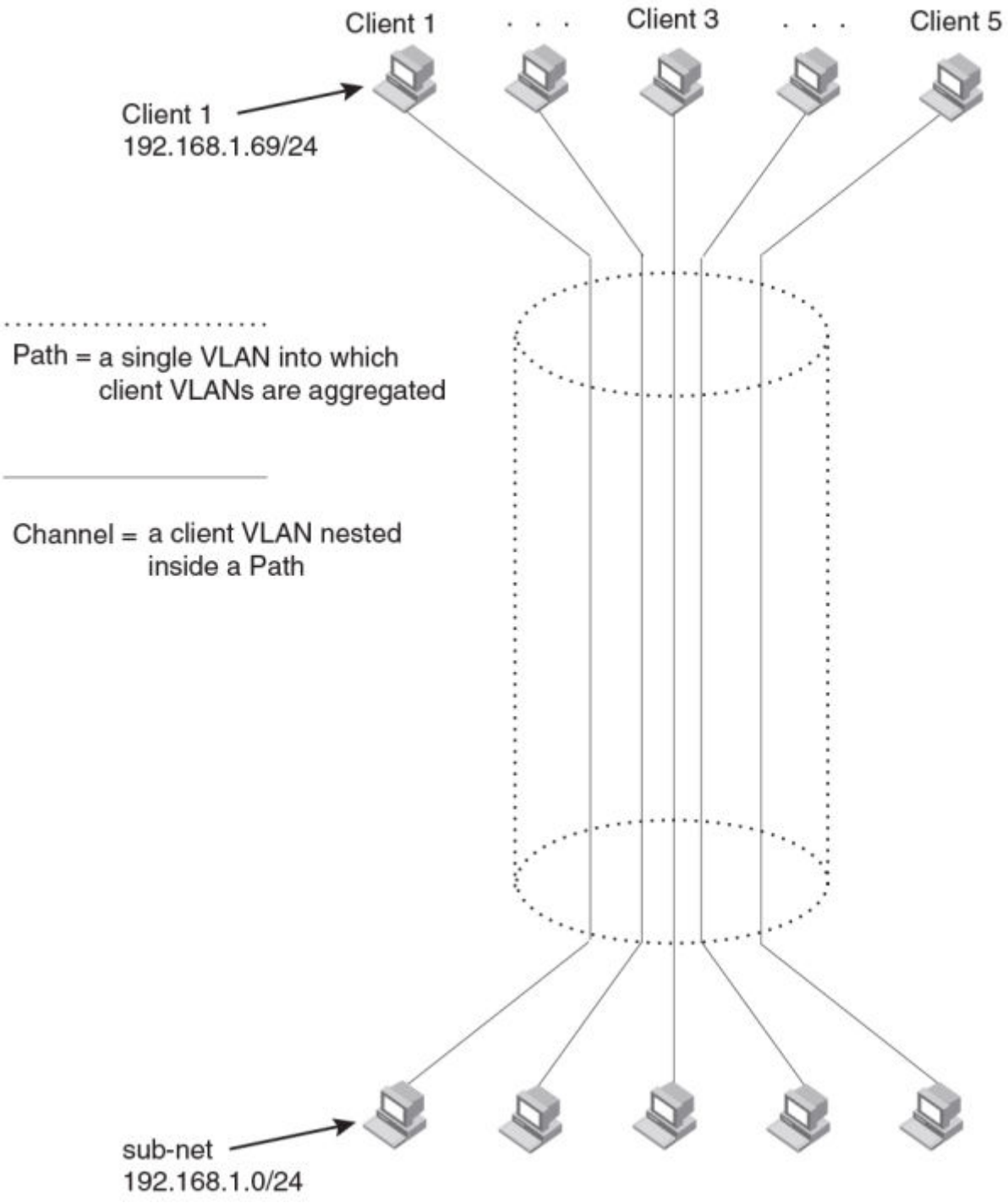

Each client connected to the edge device is in its own port-based VLAN, which is like an ATM channel. All the clients' VLANs are aggregated by the edge device into a single VLAN for connection to the core. The single VLAN that aggregates the clients' VLANs is like an ATM path.

The device that aggregates the VLANs forwards the aggregated VLAN traffic through the core. The core can consist of multiple devices that forward the aggregated VLAN traffic. The edge device at the other end of the core separates the aggregated VLANs into the individual client VLANs before

forwarding the traffic. The edge devices forward the individual client traffic to the clients. For the clients' perspective, the channel is a direct point-to-point link.

The following figure shows an example application that uses aggregated VLANs. This configuration includes the client connections shown in Figure 90.

FIGURE 91 Example of a super aggregated VLAN application

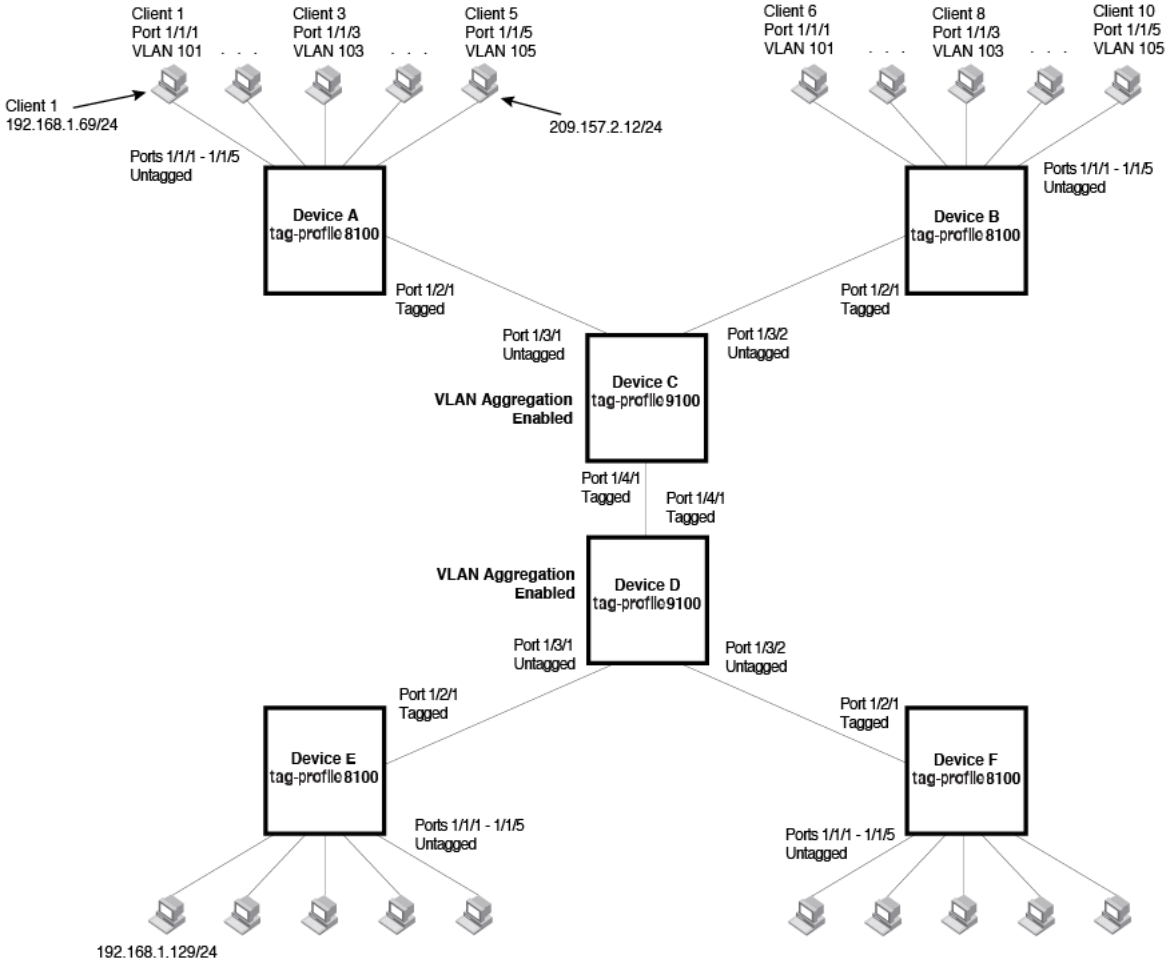

In this example, a collocation service provides private channels for multiple clients. Although the same devices are used for all the clients, the VLANs ensure that each client receives its own Layer 2 broadcast domain, separate from the broadcast domains of other clients. For example, client 1 cannot ping client 5.

The clients at each end of a channel appear to each other to be directly connected and thus can be on the same subnet and use network services that require connection to the same subnet. In this example, client 1 is in subnet 192.168.1.0/24 and so is the device at the other end of client 1 channel.

Because each VLAN configured on the core devices is an aggregate of multiple client VLANs, the aggregated VLANs greatly increase the number of clients a core device can accommodate.

This example shows a single link between the core devices. However, you can use a trunk group to add link-level redundancy.

Configuration notes for aggregated VLANs

- Super Aggregated VLANs and VSRP are not supported together on the same device.
- Super Aggregated VLANs and Q-in-Q are supported using the tag-profile command.

Configuring aggregated VLANs

To configure aggregated VLANs, perform the following tasks:

- On each edge device, configure a separate port-based VLAN for each client connected to the edge device. In each client VLAN:
  - Add the port connected to the client as an untagged port.
  - Add the port connected to the core device (the device that will aggregate the VLANs) as a tagged port. This port must be tagged because all the client VLANs share the port as an uplink to the core device.
- On each core device:
  - Enable VLAN aggregation. This support allows the core device to add an additional tag to each Ethernet frame that contains a VLAN packet from the edge device. The additional tag identifies the aggregate VLAN (the path). However, the additional tag can cause the frame to be longer than the maximum supported frame size. The larger frame support allows Ethernet frames up to 1530 bytes long.
  - To allow frames larger than 1522, you must enable jumbo frames. To globally enable jumbo support , enter commands such as the following.

```
device(config)# jumbo
device(config)# write memory
device(config)# end
device# reload
```

NOTE
Enable the VLAN aggregation option only on the core devices.

- Configure a VLAN tag profile (tag ID) that is different than the tag profile used on the edge devices. If you use the default tag profile (8100) on the edge devices, set the tag profile on the core devices to another value, such as 9100. The tag profile must be the same on all the core devices. The edge devices also must have the same tag profile but the profile must be different from the tag profile on the core devices.

NOTE
You can enable the Spanning Tree Protocol (STP) on the edge devices or the core devices, but not both. If you enable STP on the edge devices and the core devices, STP will prevent client traffic from travelling through the core to the other side.

Configuring aggregated VLANs on an edge device

To configure the aggregated VLANs on device A in Figure 91 on page 283, enter the following commands.

```
device(config)# vlan 101 by port
device(config-vlan-101)# tagged ethernet 1/2/1
device(config-vlan-101)# untagged ethernet 1/1/1
device(config-vlan-101)# exit
device(config)# vlan 102 by port
device(config-vlan-102)# tagged ethernet 1/2/1
device(config-vlan-102)# untagged ethernet 1/1/2
device(config-vlan-102)# exit
device(config)# vlan 103 by port
device(config-vlan-103)# tagged ethernet 1/2/1
device(config-vlan-103)# untagged ethernet 1/1/3
device(config-vlan-103)# exit
device(config)# vlan 104 by port
device(config-vlan-104)# tagged ethernet 1/2/1
device(config-vlan-104)# untagged ethernet 1/1/4
```

```
device(config-vlan-104)# exit
device(config)# vlan 105 by port
device(config-vlan-105)# tagged ethernet 1/2/1
device(config-vlan-105)# untagged ethernet 1/1/5
device(config-vlan-105)# exit
device(config)# write memory
```

Use the **tagged** command to add the port that the device uses for the uplink to the core device. Use the **untagged** command to add the ports connected to the individual clients.

Configuring aggregated VLANs on a core device

To configure the aggregated VLANs on device C in Figure 91 on page 283, enter the following commands.

```
device(config)# tag-profile 9100
device(config)# aggregated-vlan
device(config)# vlan 101 by port
device(config-vlan-101)# tagged ethernet 1/4/1
device(config-vlan-101)# untagged ethernet 1/3/1
device(config-vlan-101)# exit
device(config)# vlan 102 by port
device(config-vlan-102)# tagged ethernet 1/4/1
device(config-vlan-102)# untagged ethernet 1/3/2
device(config-vlan-102)# exit
device(config)# write memory
```

Verifying the aggregated VLAN configuration

You can verify the VLAN, VLAN aggregation option, and tag configuration by viewing the running-config. To display the running-config, enter the **show running-config** command from any CLI prompt. After you save the configuration changes to the startup-config, you also can display the settings in that file by entering the **show configuration** command from any CLI prompt.

Complete CLI examples for aggregated VLANs

The following sections show all the Aggregated VLAN configuration commands on the devices in Figure 91 on page 283.

> **NOTE**
> In these examples, the configurations of the edge devices (A, B, E, and F) are identical. The configurations of the core devices (C and D) also are identical. The aggregated VLAN configurations of the edge and core devices on one side must be symmetrical (in fact, a mirror image) to the configurations of the devices on the other side. For simplicity, the example in Figure 91 on page 283 is symmetrical in terms of the port numbers. This allows the configurations for both sides of the link to be the same. If your configuration does not use symmetrically arranged port numbers, the configurations should not be identical but must use the correct port numbers.

Commands for configuring aggregated VLANs on device A

```
deviceA(config)# vlan 101 by port
deviceA(config-vlan-101)# tagged ethernet 1/2/1
deviceA(config-vlan-101)# untagged ethernet 1/1/1
deviceA(config-vlan-101)# exit
deviceA(config)# vlan 102 by port
deviceA(config-vlan-102)# tagged ethernet 1/2/1
deviceA(config-vlan-102)# untagged ethernet 1/1/2
deviceA(config-vlan-102)# exit
deviceA(config)# vlan 103 by port
deviceA(config-vlan-103)# tagged ethernet 1/2/1
deviceA(config-vlan-103)# untagged ethernet 1/1/3
deviceA(config-vlan-103)# exit
deviceA(config)# vlan 104 by port
deviceA(config-vlan-104)# tagged ethernet 1/2/1
```

```
deviceA(config-vlan-104)# untagged ethernet 1/1/4
deviceA(config-vlan-104)# exit
deviceA(config)# vlan 105 by port
deviceA(config-vlan-105)# tagged ethernet 1/2/1
deviceA(config-vlan-105)# untagged ethernet 1/1/5
deviceA(config-vlan-105)# exit
vA(config)# write memory
```

Commands for configuring aggregated VLANs on device B

The commands for configuring device B are identical to the commands for configuring device A. Notice that you can use the same channel VLAN numbers on each device. The devices that aggregate the VLANs into a path can distinguish between the identically named channel VLANs based on the ID of the path VLAN.

```
deviceB(config)# vlan 101 by port
deviceB(config-vlan-101)# tagged ethernet 1/2/1
deviceB(config-vlan-101)# untagged ethernet 1/1/1
deviceB(config-vlan-101)# exit
deviceB(config)# vlan 102 by port
deviceB(config-vlan-102)# tagged ethernet 1/2/1
deviceB(config-vlan-102)# untagged ethernet 1/1/2
deviceB(config-vlan-102)# exit
deviceB(config)# vlan 103 by port
deviceB(config-vlan-103)# tagged ethernet 1/2/1
deviceB(config-vlan-103)# untagged ethernet 1/1/3
deviceB(config-vlan-103)# exit
deviceB(config)# vlan 104 by port
deviceB(config-vlan-104)# tagged ethernet 1/2/1
deviceB(config-vlan-104)# untagged ethernet 1/1/4
deviceB(config-vlan-104)# exit
deviceB(config)# vlan 105 by port
deviceB(config-vlan-105)# tagged ethernet 1/2/1
deviceB(config-vlan-105)# untagged ethernet 1/1/5
deviceB(config-vlan-105)# exit
deviceB(config)# write memory
```

Commands for configuring aggregated VLANs on device C

Because device C is aggregating channel VLANs from devices A and B into a single path, you need to change the tag profile and enable VLAN aggregation.

```
deviceC(config)# tag-profile 9100
deviceC(config)# aggregated-vlan
deviceC(config)# vlan 101 by port
deviceC(config-vlan-101)# tagged ethernet 1/4/1
deviceC(config-vlan-101)# untagged ethernet 1/3/1
deviceC(config-vlan-101)# exit
deviceC(config)# vlan 102 by port
deviceC(config-vlan-102)# tagged ethernet 1/4/1
deviceC(config-vlan-102)# untagged ethernet 1/3/2
deviceC(config-vlan-102)# exit
deviceC(config)# write memory
```

Commands for configuring aggregated VLANs on device D

Device D is at the other end of path and separates the channels back into individual VLANs. The tag profile must be the same as tag profile configured on the other core device (Device C). In addition, VLAN aggregation also must be enabled.

```
deviceD(config)# tag-profile 9100
deviceD(config)# aggregated-vlan
deviceD(config)# vlan 101 by port
deviceD(config-vlan-101)# tagged ethernet 1/4/1
deviceD(config-vlan-101)# untagged ethernet 1/3/1
deviceD(config-vlan-101)# exit
```

```
deviceD(config)# vlan 102 by port
deviceD(config-vlan-102)# tagged ethernet 1/4/1
deviceD(config-vlan-102)# untagged ethernet 1/3/2
deviceD(config-vlan-102)# exit
deviceD(config)# write memory
```

Commands for configuring aggregated VLANs on device E

Because the configuration in Figure 91 on page 283 is symmetrical, the commands for configuring device E are identical to the commands for configuring device A.

```
deviceE(config)# vlan 101 by port
deviceE(config-vlan-101)# tagged ethernet 1/2/1
deviceE(config-vlan-101)# untagged ethernet 1/1/1
deviceE(config-vlan-101)# exit
deviceE(config)# vlan 102 by port
deviceE(config-vlan-102)# tagged ethernet 1/2/1
deviceE(config-vlan-102)# untagged ethernet 1/1/2
deviceE(config-vlan-102)# exit
deviceE(config)# vlan 103 by port
deviceE(config-vlan-103)# tagged ethernet 1/2/1
deviceE(config-vlan-103)# untagged ethernet 1/1/3
deviceE(config-vlan-103)# exit
deviceE(config)# vlan 104 by port
deviceE(config-vlan-104)# tagged ethernet 1/2/1
deviceE(config-vlan-104)# untagged ethernet 1/1/4
deviceE(config-vlan-104)# exit
deviceE(config)# vlan 105 by port
deviceE(config-vlan-105)# tagged ethernet 1/2/1
deviceE(config-vlan-105)# untagged ethernet 1/1/5
deviceE(config-vlan-105)# exit
deviceE(config)# write memory
```

Commands for configuring aggregated VLANs on device F

The commands for configuring device F are identical to the commands for configuring device E. In this example, Because the port numbers on each side of the configuration in Figure 91 on page 283 are symmetrical, the configuration of device F is also identical to the configuration of device A and device B.

```
deviceF(config)# vlan 101 by port
deviceF(config-vlan-101)# tagged ethernet 1/2/1
deviceF(config-vlan-101)# untagged ethernet 1/1/1
deviceF(config-vlan-101)# exit
deviceF(config)# vlan 102 by port
deviceF(config-vlan-102)# tagged ethernet 1/2/1
deviceF(config-vlan-102)# untagged ethernet 1/1/2
deviceF(config-vlan-102)# exit
deviceF(config)# vlan 103 by port
deviceF(config-vlan-103)# tagged ethernet 1/2/1
deviceF(config-vlan-103)# untagged ethernet 1/1/3
deviceF(config-vlan-103)# exit
deviceF(config)# vlan 104 by port
deviceF(config-vlan-104)# tagged ethernet 1/2/1
deviceF(config-vlan-104)# untagged ethernet 1/1/4
deviceF(config-vlan-104)# exit
deviceF(config)# vlan 105 by port
deviceF(config-vlan-105)# tagged ethernet 1/2/1
deviceF(config-vlan-105)# untagged ethernet 1/1/5
deviceF(config-vlan-105)# exit
deviceF(config)# write memory
```

802.1ad Tagging Configuration

802.1ad tagging provides finer granularity for configuring 802.1Q tagging, enabling you to configure 802.1Q tag profile for a single port, or to direct a group of ports to a globally-configured tag profile. This feature allows you to create two identical 802.1Q tags (802.1ad tagging) on a single device. This enhancement improves SAV interoperability between RUCKUS devices and other vendors' devices that support the 802.1Q tag-profiles, but are not very flexible with the tag-profiles they accept.

NOTE
RUCKUS devices treat a double-tagged Ethernet frame as a Layer 2 only frame. The packets are not inspected for Layer 3 and Layer 4 information, and operations are not performed on the packet utilizing Layer 3 or Layer 4 information.

The following figure shows an example application with 802.1ad tagging.

FIGURE 92 802.1ad configuration example

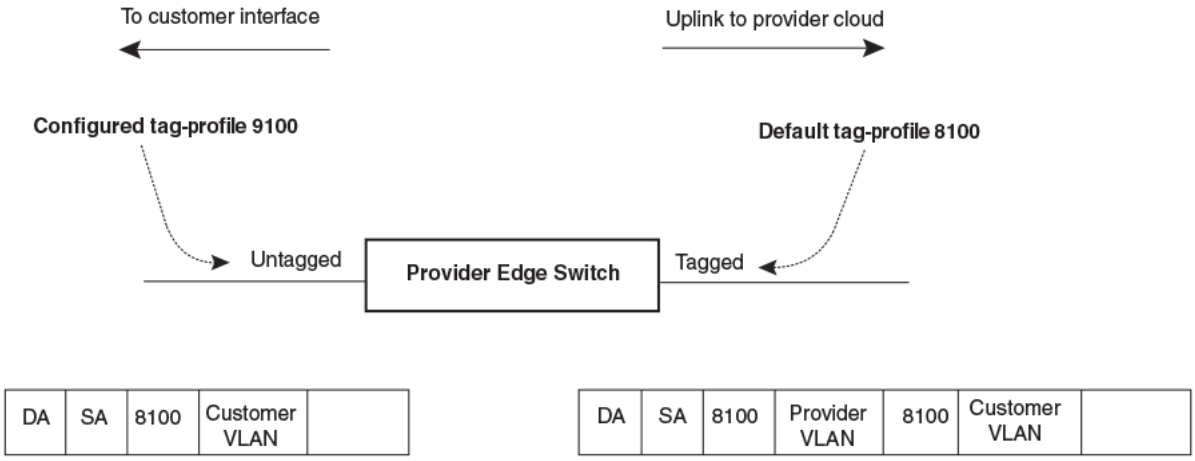

In the above figure, the untagged ports (to customer interfaces) accept frames that have any 802.1Q tag other than the configured tag-profile 9100. These packets are considered untagged on this incoming port and are re-tagged when they are sent out of the uplink towards the provider. The 802.1Q tag-profile on the uplink port is 8100, so the RUCKUS device will switch the frames to the uplink device with an additional 8100 tag.

Configuration Rules for 802.1ad Tagging

- When you set the tag-profile in the global configuration mode, you need to enable tag-profile on per port basis using the **tag-profile enable** command. Only the tag-profile enabled ports use the user-configured tag-profile. The remaining ports continue using system default tag-profile. Using this method, q-in-q can be achieved even if ingress and egress ports are in a single device.

  For more information, refer to Enabling 802.1ad tagging on page 289.
- One global tag profile with a number between 0 and 0xffff can be configured on stackable devices.
- On individual ports, if **tag-profile** is enabled, it points to the global tag profile.
- **Tag-profile** can also be enabled for provisional ports.

Enabling 802.1ad Tagging

To enable 802.1ad tagging, configure an 802.1Q tag on the untagged edge links (the customer ports) to any value other than the 802.1Q tag for incoming traffic. For example, in Figure 93 on page 290, the 802.1Q tag on the untagged edge links (ports 1/1/11 and 1/1/12) is 9100, whereas, the 802.1Q tag for incoming traffic is 8100.

To configure 802.1 ad tagging as shown in Figure 93 on page 290, enter commands such as the following on the untagged edge links of devices C and D.

1. Enter the global configuration mode.

```
device# configure terminal
```

2. Configure tag profile.

```
device(config)# tag-profile 9100
```

3. Enable tag profile for multiple ports.

```
device(config)# interface ethernet 1/1/11 ethernet 1/1/12
device(config-mif-1/1/11,1/1/12)# tag-profile enable
```

4. Enable VLAN aggregation.

```
device(config)# aggregated-vlan
```

Example 802.1ad configuration

The following figure shows an example 802.1ad configuration.

FIGURE 93 Example 802.1ad configuration

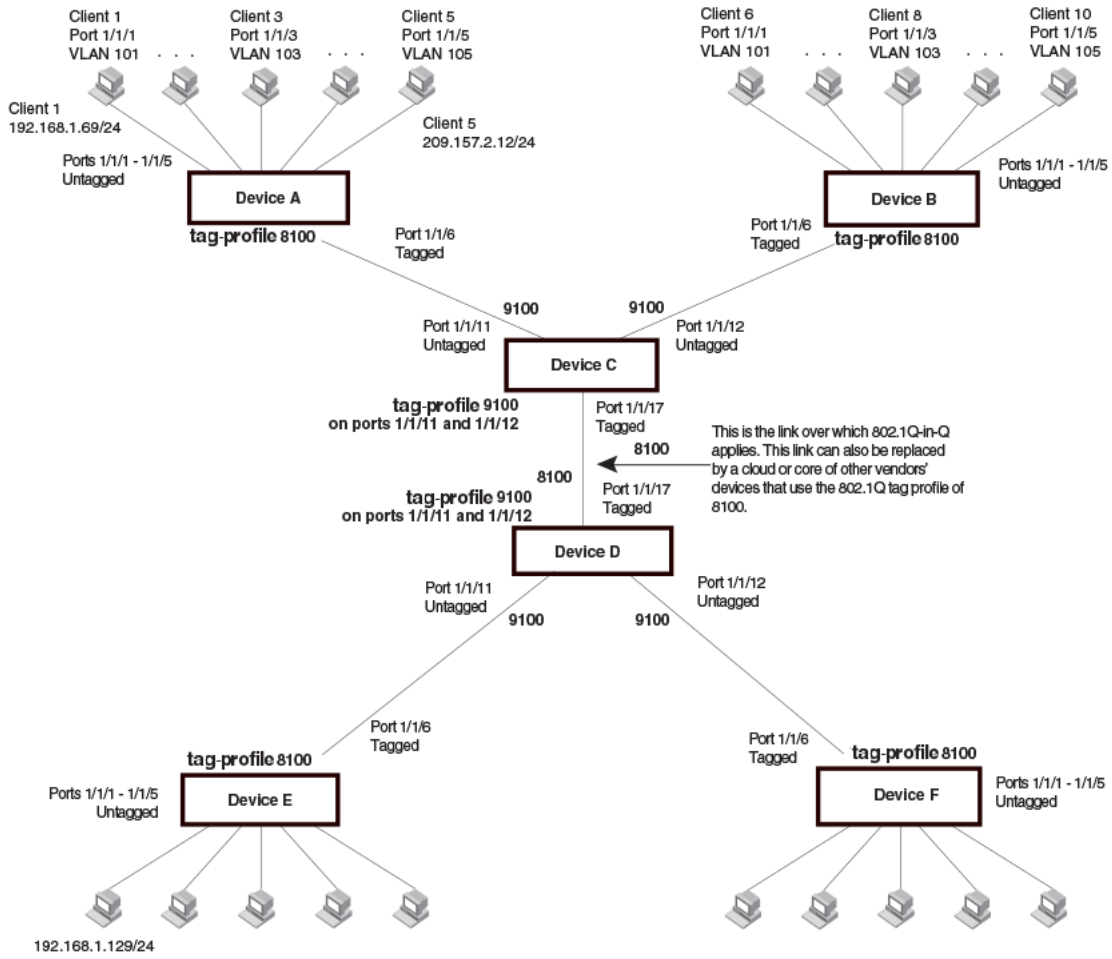

Selective Q-in-Q

Currently, Q-in-Q is supported in ICX products using tag-profile, where all the traffic on a tag-profile enabled port are tunneled using one service VLAN.

However, there are situations where you do not want to add a service VLAN tag to all the incoming traffic. Rather, you need to selectively tunnel certain set of vlan traffic while allowing regular forwarding of the rest. Selective Q-in-Q is the way to achieve Q-in-Q per CVLAN basis, where you have the flexibility to selectively choose and add service VLAN tag based on the customer VLAN.

How it works

Selective Q-in-Q enables Q-in-Q functionality per CVLAN basis. Service vlan tag is added only for the mapped CVLANs. The unmapped CVLAN traffic is forwarded normally.

On an interface, you can configure a maximum of 50 SVLANs.

NOTE
When you downgrade to a version that does not support multiple SVLANs on an interface, only the first selective Q-in-Q configuration is accepted. The rest of the configuration will throw error.

FIGURE 94 VLAN based Selective Q-in-Q

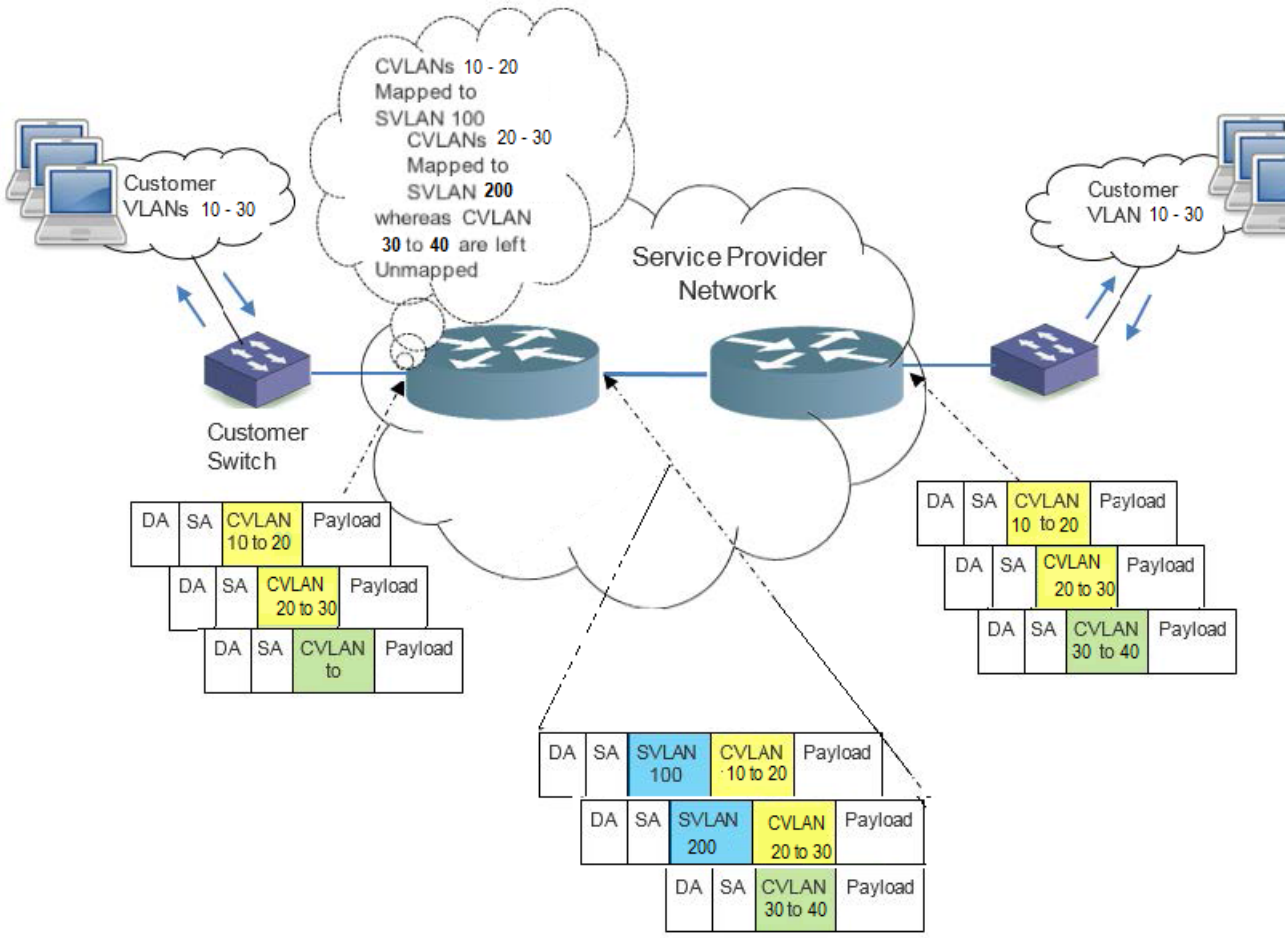

In the sample deployment shown in the figure above, CVLANs 10 to 20 which are mapped to SVLAN 100 are encapsulated with a service tag of 100 and CVLANs 20 to 30 which are mapped to SVLAN 200 are encapsulated with a service tag of 200. Traffic from unmapped CVLANs 30 to 40 are forwarded normally. If the ingress port is not member of the unmapped CVLANs, then the traffic gets dropped as part of regular VLAN filtering.

Selective Q-in-Q Vlan Mapping

CVLANs are mapped with service VLANs using the **qinq-tunnel cvlan** command.

```
device (config-if)#qinq-tunnel cvlan <VLAN_ID [to] VLAN_ID > svlan  <svlan_id>
```

For example,

```
device(config-if)#qinq-tunnel cvlan 100 svlan 4000
device(config-if)#qinq-tunnel cvlan 2 3 5 300 to 500 svlan 4000
```

Untagged and priority tagged packets are mapped to a service vlan using the following command.

```
device(config-if)#qinq-tunnel cvlan untag svlan <svlan_id>
```

Considerations

The following must be considered while trying to configure selective Q-in -Q:

- If all the customer traffic needs to be tunneled using SVLAN, it is recommended to use tag-profile based Q-in-Q.
- Both Q-in-Q tunnel start point and tunnel end point should have symmetric CVLANs to SVLAN mapping.
- SVLAN ID cannot be a reserved VLAN ID.
- With the implicit dual-mode support, all ports are member of untagged VLAN1 by default. Before configuring untagged selective Qin-Q tunnel on a port, you must remove it's untagged VLAN 1 membership.
- Tunneling of untagged BPDUs like LLDP or LACP works only if selective Q-in-Q tunnel has **untag** tunneling configured.
- Untagged tunneling can only be configured on one SVLAN per interface,when interface has multiple SVLAN configured.
- The default Tag Profile Identifier (TPID) for SVLAN tag is 8100. You can use the existing tag-profile command to change the TPID value for the SVLAN tag.
- At the tunnel end-point, the TPID of SVLAN tag in the Q-in-Q packets must match the port's configured TPID for selective Q-in-Q to function correctly where the service VLAN is removed while the traffic egresses out of service provider domain. Hence SVLAN tag TPID value should be same on tunnel start and end points.
- For selective Q-in Q, the MTU value on ICX switches is increased by 4 bytes (1522) from the default 1518 bytes to accommodate the additional dot1q tag. You can use the existing **aggregated-vlan** CLI to increase the MTU of all the ports to 1522.
- The following table displays the maximum number of selective VLAN tunneling that can be configured per stack unit in a system.

TABLE 24 Maximum selective VLAN tunnels per stacking device

ICX platform	Maximum number of C-VLAN tunneling per stack unit
ICX 7850	8000
ICX 7750	8000
ICX 7650	8000
ICX 7450	8000
ICX 7250	8000
ICX 7150	1024

For example, in a two unit 7750 stack, you can configure up to 16000 CVLAN mappings on the whole stack. This means, 8000 CVLANS on stack unit 1 and 8000 CVLANs on stack unit 2.
Number of VLAN mapping on a lag is equal to number of member ports multiplied by the number of CVLANs mapping configured on the lag interface. For example, if a lag has 6 ports and on the lag interface 10 CVLANs are mapped to a SVLAN, then the total number of mappings is considered as 60.

Configuring selective Q-in-Q

Execute the following steps to configure the selective Q-in Q.

1. Enter the global configuration mode.

```
device#configure terminal
```

2. If port is not a member of the above specified SVLAN ID, then execute the below command to add the port as a tag member of the SVLAN.

```
device(config)#vlan 2
device(config-vlan-2)#tagged ethernet <stackid>/<slot>/<port>
```

3. Navigate to the interface on which Q-in-Q tunneling needs to be enabled.

```
device(config)# interface ethernet <stackid>/<slot>/<port>
device(config-if)#qinq-tunnel cvlan <vlan list> svlan <svlan_id>
```

   To configure on a lag:

```
device(config)#interface lag <LAG_ID>
device(config-lag-if)#qinq-tunnel cvlan <vlan list> svlan <svlan_id>
```

   To allow Q-in-Q tunneling of untagged customer traffic:

```
device(config)#interface ethernet 1/1/4
device(config-if-e1000-1/1/4)#qinq-tunnel cvlan untag svlan 1000
```

4. (Optional) If there is a need to change the TPID of SVLAN tag to other than 8100, complete the following configuration on the egress port which is supposed to egress out with that TPID.

```
device(config)# tag-profile <tpid/ether_type>
device(config)# interface ethernet <stackid>/<slot>/<port>
device(config-if)#tag-profile enable
```

Configuration example

The sample customer topology presented below shows a complete Q-in-Q configuration on both the SP edge devices and the same is verified using show command outputs.

```
device#show qinq
  brief      Brief display of qinq Information
  ethernet   show qinq tunnelled cvlans for port
  lag        show qinq tunnelled cvlans for lag
  |          Output modifiers
  <cr>
device#show qinq-tunnel
        Total number of vlan(s) tunneled: 2865
        Total number of HW resource used: 2865
        Selective qinq enabled port(s): 1/1/1 1/2/2 lg1
  Port : 1/1/1 Number of CVLANs tunneled : 206
        Service vlan: 3000 Tunneled VLAN(s) : 2 to 3 5 6 7 100 to 200
        Service vlan : 3001 Tunneled VLAN(s): 400 to 500
  Port : 1/2/2 Number of CVLANs tunneled : 2600
        Service vlan : 333 Tunneled VLAN(s): 1 to 2600
  Port : lg1 Number of CVLANs tunneled: 53
        Service vlan: 3000 Tunneled VLAN (s): 500 to 550 600 , untag

device# show qinq-tunnel br
  Total number of vlan(s) tunneled: 2865
  Total number of HW resource used: 2865
  Selective qinq enabled port(s): 1/1/1 1/2/2 lg1

device#show qinq-tunnel e 1/1/1
  Port : 1/1/1 Number of CVLANs tunneled : 206
  Service vlan: 3000 Tunneled VLAN(s) : 2 to 3 5 6 7 100

device#
```

When selective Q-in-Q is enabled, the **show interface ethernet** command displays the enabled status as follows.

```
ICX7750-48F Router#show int eth 1/1/16 | in Selective
  L2 Tunnel protocols enabled(mode:Selective qinq):CDP LACP LLDP STP
  Selective qinq enabled
```

Limitations

- CVLAN to SVLAN mapping must be unique. Same set of CVLAN cannot be mapped to more than one SVLAN, on the same interface.
- The CoS parameters of the CVLAN are propagated to the SVLAN. There is no configurable option provided to change this behavior.

- If incoming customer traffic is already double tagged, traffic is forwarded normally even though the outer CVLAN is mapped to a service vlan.
- Tag profile based Q-in-Q and selective Q-in-Q are mutually exclusive. Hence, cannot coexist on the same interface.
- Implicit dual-mode and untagged traffic tunneling mapping are mutually exclusive. Hence, cannot co-exist.
- When VLAN mapping is configured on a lag interface, the mapping is applied on all the member ports of the lag.
- SVLAN ID cannot be a reserved VLAN ID.
- If Bridge Protocol Data Unit (BPDU) tunneling feature is configured on the selective Q-in-Q enabled port, then BPDU tunneling is applicable only for the mapped CVLANs. BPDUs received on the unmapped CVLANs is processed in the regular manner.
- BPDU tunneling is now supported over selective Q-inQ. But BPDU tunneling cannot be achieved without Q-in-Q tunnel. Unconfiguring selective Q-in-Q tunnel removes the BPDU tunneling configurations from the interface.
- Only one tag-profile can be configured in a system. Hence you cannot configure different TPIDs on different egress ports using the tag-profile.
- BUM or DLF traffic flooded in SVLAN domain, i.e. to all the member ports of the SVLAN might cause traffic leak between CVLANs.
- In SPX or campus fabric, VLAN based Selective Q-in-Q is not supported on PE ports.
- PVLAN is not supported on selective QinQ enabled ports.
- Selective Q-in-Q cannot be configured on dot1x enabled ports and vice versa.

Scaling considerations for Bpdu-tunneling over Selective Q-in-Q

Bpdu-tunneling is used to tunnel layer2 BPDUs between customer sites over the service provider network . All the incoming BDPUs are forwarded in the slow path or CPU. Even though the total number of tunneled CVLANs is increased to 8000 per stack unit, the number of BPDUs that can be tunneled is limited, resulting in CPU load. An ICX 7750 device can tunnel up to 1600 protocol packets per second (for whole system), with reasonable CPU usage.

NOTE
The CPU usage is expected around 10 to 18% with above scale, but the actual CPU usage may vary depending on other configuration and traffic on the system. Hence, the BPDU rate can be a combination of STP, PVST, LACP and LLDP protocol PDUs.

802.1Q (Q-in-Q) BPDU tunneling

BPDU tunneling over Q-in-Q enables a service provider to provide Layer 2 VPN connectivity between different customer sites. The service provider can give the customers an infrastructure to run various Layer 2 protocols and connect to all geographically-separated sites.

In Q-in-Q BPDU tunneling, a customer packet transferred through the service provider network is tagged twice (except for untagged customer traffic which has only one outer tag). Apart from the customer's 802.1Q VLAN tags (C-VLAN), a service VLAN tag (S-VLAN) is also added on all the frames. By adding different VLAN tags for each customer, traffic (control/protocol/bpdu for which tunneling is enabled) from different customers can be segregated and transferred throughout the service provider network without any VLAN conflict. Also, the service provider network is transparent to the customer and can run STP (PVST, RSTP, MSTP), LACP, CDP, and LLDP seamlessly using the Layer 2 tunneling.

How Q-in-Q BPDU tunneling works

When Q-in-Q BPDU tunneling is enabled, the service provider (ingress) edge device receives the BPDU packets and delivers the packets to the CPU along with C-VLAN and S-VLAN information. Upon ingress to the service provider network, the protocol or BPDU MAC address is replaced with a tunnel MAC address and is sent across the service provider network. Intermediate devices on the service provider network forward the frame as an unknown multicast packet. Upon egress from the service provider network to the customer network, the tunnel MAC packets are decapsulated and delivered to the customer edge device. For Layer 2 protocols such as LACP and STP to converge properly, point-to-point connections must be emulated for each port using a unique customer-to-service VLAN.

In the following topology, Customer X site A and Customer X site B are connected in the service provider network through Q-in-Q BPDU tunneling. Both data and control packets coming from the customer site with customer VLAN (C-VLAN) are double-tagged with a Service VLAN (S-VLAN).

FIGURE 95 Q-in-Q topology

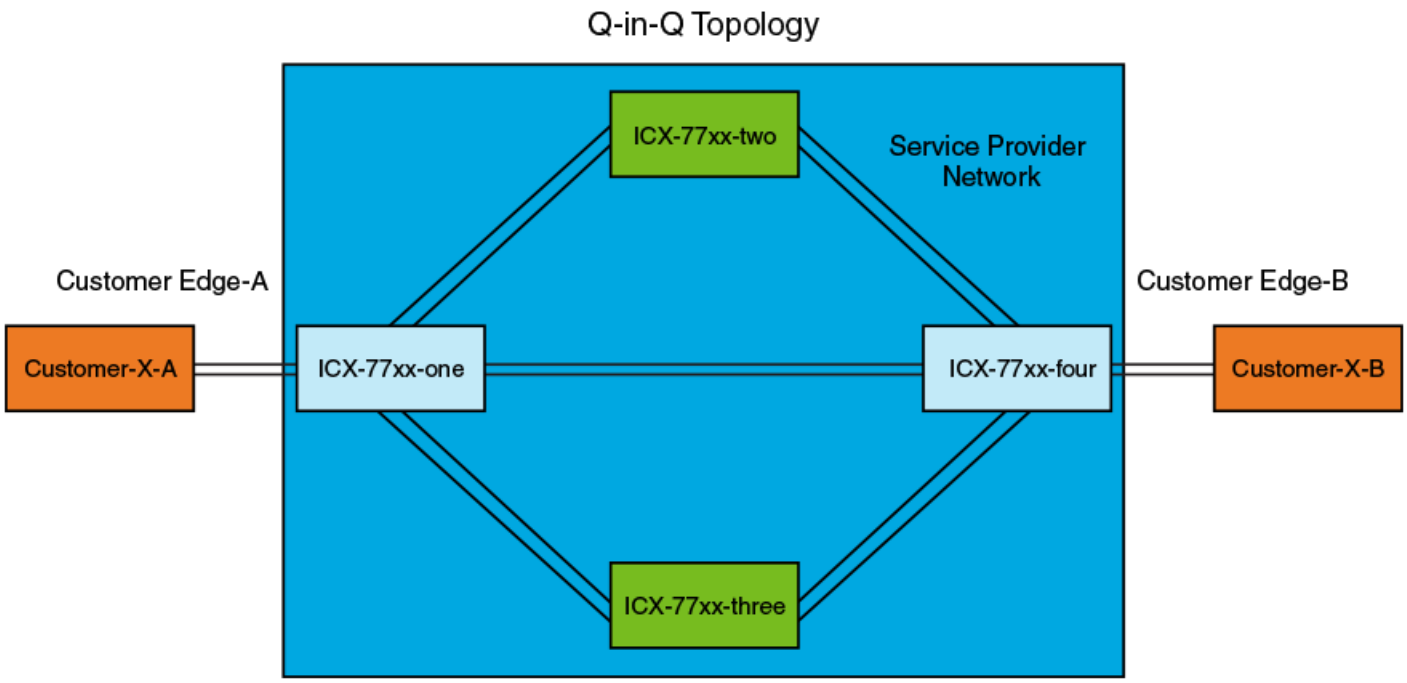

NOTE

When Layer 2 protocol tunneling is enabled on a customer-connected interface of the service provider device, all the received tunnel protocol packets will be tunneled to the service network. To prevent any locally generated protocol packets (for example, STP or LLDP) on the service provider network from switching to the customer side, the corresponding protocols must be disabled on the device.

The Protocol or BPDU packet format at various stages is shown in the following topology.

FIGURE 96 Various stages of protocol or BPDU packet format

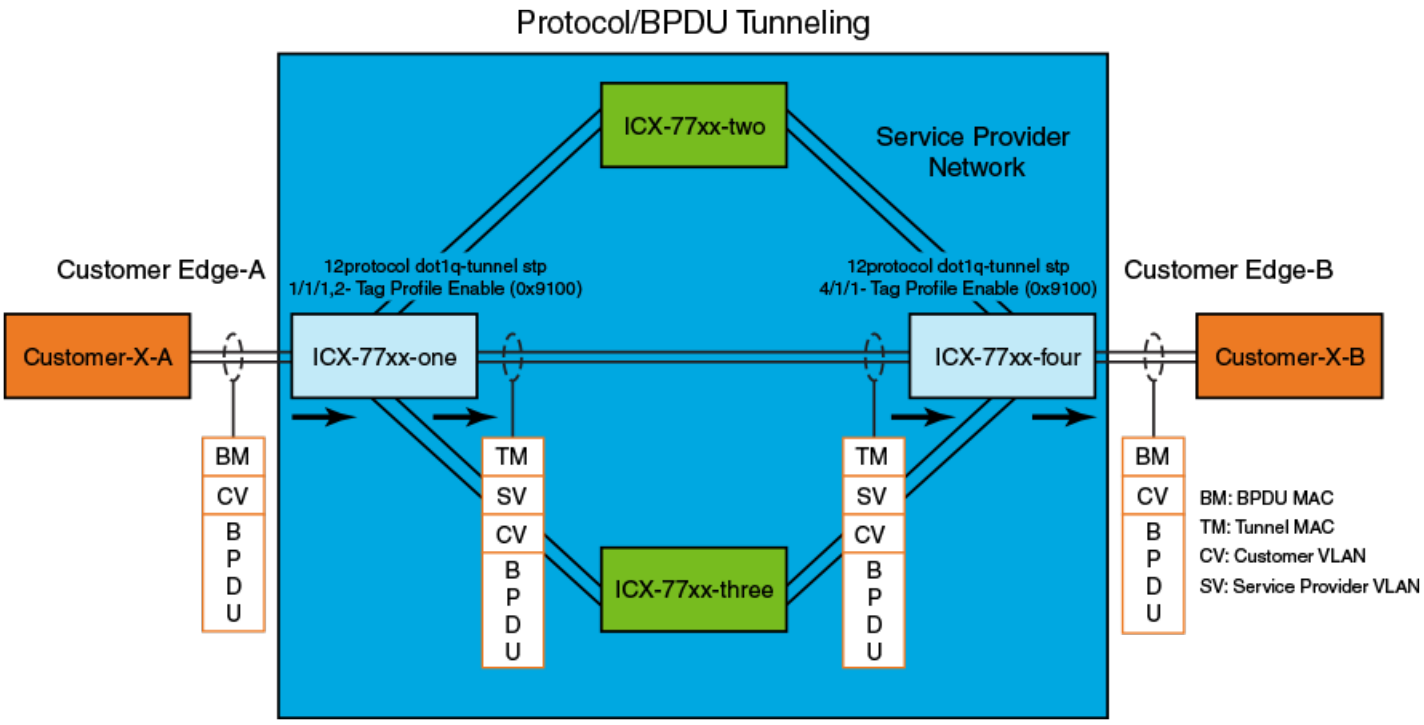

Q-in-Q BPDU tunneling does not affect any Class of Service (CoS) values that are configured on the C-VLAN. Ingress priority and CoS settings from the C-VLAN are copied to the S-VLAN. CoS values do not change in the reverse direction (S-VLAN to C-VLAN).

To add a specific check for VTP at tunnel egress, VTP is tunneled with CDP tunnel enabled using the **cdp enable** CLI. You must also run the **cdp run** CLI to enables the device to intercept and display CDP messages. For more information on CLIs, please refer the *Ruckus Command Reference*.

Configuring Q-in-Q BPDU tunneling

Complete the following steps to configure BPDU tunneling over Q-in-Q.

1. Enter the **configure terminal** command to enter global configuration mode.

```
device# configure terminal
```

2. Enable BPDU tunneling on tag-profile enabled port or Selective Q-in-Q enabled port.
   - Enable BPDU tunneling on a tag-profile-enabled port.

     ```
     device(config)# interface ethernet 1/1/1
     device(config-if-e1000-1/1/1)# tag-profile enable
     device(config-if-e1000-1/1/1)# l2protocol dot1q-tunnel
     ```

   - Enable BPDU tunneling on a Selective Q-in-Q-enabled port.

     ```
     device(config)# interface ethernet 1/1/1
     device(config-if-e1000-1/1/1)# qinq-tunnel cvlan 1 to 4 untag svlan 100
     device(config-if-e1000-1/1/1)# l2protocol dot1q-tunnel
     ```

   Optionally, you can enable STP (PVST, RSTP, MSTP), LACP, CDP or LLDP tunneling.

   NOTE
   ICX provides a flexibility of configuring BPDU tunneling without tag profile and selective Q in Q. This is specially for situations where the BPDU tunneling is enabled in the transit devices.

3. (Optional) Configure the maximum number of packets that can be processed on an interface before being dropped.

   ```
   device(config-if-e1000-1/1/1)# l2protocol dot1q-tunnel drop-threshold all 3000
   ```

4. (Optional) Configure the maximum number of packets that can be processed on an interface before putting the ingress port in error-disabled state.

   ```
   device(config-if-e1000-1/1/1)# l2protocol dot1q-tunnel shutdown-threshold all 3500
   ```

5. Enter the **exit** command to return to global configuration mode.

   ```
   device(config-if-e1000-1/1/1)# exit
   device(config)#
   ```

6. (Optional) Specify the multicast MAC address for the tunnel from the global configuration mode.

   ```
   device(config)# l2protocol dot1q-tunnel-mac 0100.1a2b.3c4d
   ```

   The default MAC value is 0100.0ccd.cdd1. You can also specify to use the original MAC address in the packet as tunnel MAC address using the **original** option. The original MAC address can be used as an option to interoperate with older ICX 6xxx series devices. The **original** option must not be used if the transit switch in the service provider network is an ICX 6xxx device and or any vendor that consumes standard BPDU as it may result in protocol packet consumption.

7. (Optional) Specify a global Class of Service (CoS) value on all Q-in-Q tunneling ports from the global configuration mode. .

   ```
   device(config)# l2protocol dot1q-tunnel cos 6
   ```

   The ingress BPDUs on the tunnel ports are encapsulated with the specified class. The default CoS value is 5.

The following example shows the steps to configure Q-in-Q BPDU tunneling.

```
device# configure terminal
device(config)# interface ethernet 1/1/1
device(config-if-e1000-1/1/1)# tag-profile enable
device(config-if-e1000-1/1/1)# l2protocol dot1q-tunnel
device(config-if-e1000-1/1/1)# l2protocol dot1q-tunnel drop-threshold all 3000
device(config-if-e1000-1/1/1)# l2protocol dot1q-tunnel shutdown-threshold all 3500
device(config-if-e1000-1/1/1)# exit
device(config)# l2protocol dot1q-tunnel-mac 0100.1a2b.3c4d
device(config)# l2protocol dot1q-tunnel cos 6
```

The following example shows the steps to configure BPDU tunneling on Selective Q-in-Q-enabled port .

```
device# configure terminal
device(config)# interface ethernet 1/1/1
device(config-if-e1000-1/1/1)# qinq-tunnel cvlan 1 to 4 untag svlan 100
device(config-if-e1000-1/1/1)# l2protocol dot1q-tunnel
device(config-if-e1000-1/1/1)# l2protocol dot1q-tunnel drop-threshold all 3000
device(config-if-e1000-1/1/1)# l2protocol dot1q-tunnel shutdown-threshold all 3500
device(config-if-e1000-1/1/1)# exit
device(config)# l2protocol dot1q-tunnel-mac 0100.1a2b.3c4d
device(config)# l2protocol dot1q-tunnel cos 6
```

NOTE

The **l2protocol dot1q-tunnel** enables protocol tunneling for xSTP, LACP, LLDP, CDP, and VTP.

Simultaneous support for tagged and untagged VLANs

Every interface is an untagged member of default VLAN or any user specified VLAN, unless user explicitly removes this untagged interface from default VLAN. The interface will always remain in the default VLAN (or non-default VLAN in which the interface is configured as untagged member), when this interface is added as tagged member of non-default VLAN. Thus, all tagged interfaces are implicit dual-mode ports.

This implicit dual-mode feature simplifies the tagging concept by changing the system default behavior to allow both tagged and untagged frames simultaneously (as per configurations). The dual-mode keyword is now deprecated, thus eliminating the need of explicit dual-mode configuration.

NOTE

With the introduction of implicit dual mode, CCEP ports cannot be configured as untagged member of default VLAN, when the default VLAN is a non MCT VLAN. Hence, the dual-mode configuration is disabled on CCEP ports as part of the image upgrade to current release.

```
ICX7250-24 Router(config)#vlan 100
ICX7250-24 Router(config-vlan-100)#tagged ethe 1/1/1
Added tagged port(s) ethe 1/1/1 to port-vlan 100.
ICX7250-24 Router(config-vlan-100)#vlan 1
ICX7250-24 Router(config-vlan-1)#no untagged ethe 1/1/1
```

Since user is allowed to remove ports from default VLAN which completely removes the untagged VLAN membership of an interface, this will be saved to running configuration to retain the VLAN membership upon reload. User VLANs will continue to display membership as per user configurations.

```
ICX7250-24 Router(config)#vlan 100
ICX7250-24 Router(config-vlan-100)#untagged ethe 1/1/1
Added untagged port(s) ethe 1/1/1 to port-vlan 100.
ICX7250-24 Router(config-vlan-100)#vlan 101
ICX7250-24 Router(config-vlan-1)#tagged ethe 1/1/2 to 1/1/3
ICX7250-24 Router(config-vlan-100)#vlan 1
ICX7250-24 Router(config-vlan-1)#no untagged ethe 1/1/2 to 1/1/3
ICX7250-24 Router(config-vlan-1)#sh ru vlan
vlan 1 name DEFAULT-VLAN by port
no untagged ethe 1/1/2 to 1/1/3***
!
vlan 100 by port
 untagged ethe 1/1/1
!
```

As you can see, only the interfaces that are deleted explicitly by the user is displayed. If an interface is moved internally as part of some other VLAN configurations (1/1/1, in the above example), it is not displayed under default-VLAN.

NOTE

Show VLAN output will no more display dual-mode and uplink ports. This command displays VLAN membership as per the option provided. There is no change in VLAN display order, but default VLAN displays the interfaces that are explicitly removed from default VLAN using the **no untagged ethernet** command.

VLAN Mapping

VLAN Mapping provides a mechanism for Service Providers to translate CVLANs to SVLANs when a packet enters its network and vice-versa, when it leaves the network.

VLAN translation is enabled on a per-port basis, where a CVLAN is mapped to an SVLAN. The CVLAN tag in the packet is replaced with the configured SVLAN tag within the service provider network. When the packet leaves the service provider network, the SVLAN tag in the packet egressing will be replaced with the CVLAN tag.

NOTE
This is different from Q-in-Q because we do not double tag; instead, we replace the VLAN tag.

Typically, the same VLAN mapping configuration(s) must be done for all the edge ports to the same customer. This feature is supported on all the existing ICX hardware platforms. VLAN Mapping is not supported on PE ports.

Basic VLAN mapping deployment

The above figure depicts a typical VLAN mapping deployment.

FIGURE 97 VLAN Mapping

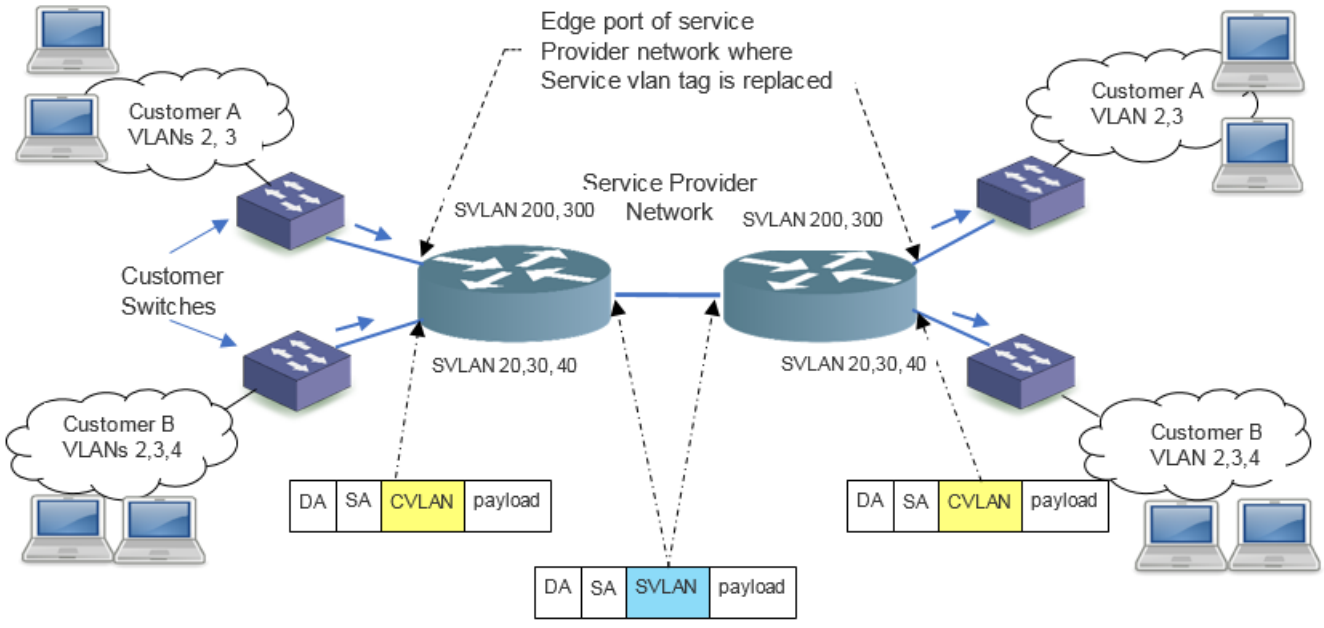

Customer A runs on VLAN 2 and VLAN 3. The service provider maps customer A's VLAN 2 and VLAN 3 to service provider's VLAN 200 and VLAN 300 respectively. This mapping is done on both edge ports on the service provider's network, where the customer network is connected.

Similarly, Customer B runs on VLAN 2, VLAN 3 and VLAN 4. The service provider maps customer A's VLAN 2, VLAN 3 and VLAN 4 to service provider's VLAN 20, VLAN 30 and VLAN 40 respectively. This mapping is done on both edge ports on the service provider's network, where the customer network is connected.

So, within the service provider network, traffic on VLANS 200 and VLAN 300 signifies traffic for Customer A and traffic on VLANs 20, VLAN 30, and VLAN 40 signifies traffic for Customer B.

VLAN mapping configuration

The VLAN mapping is enabled using the vlan-mapping command. Execute the following steps to configure VLAM mapping.

1. Enter the global configuration mode.

```
device#configure terminal
```

2. Navigate to the interface on which VLAN mapping needs to be enabled.

```
device(config)# interface ethernet <stack id/slot/port>
device(config-if)#vlan-mapping cvlan <vlan list> svlan <svlan_id>
```

3. If the port is not a member of the above specified SVLAN ID, execute the following command to add the port as a tag member of the SVLAN.

```
device(config-if)# vlan-config add <svlan_id>
```

   Alternatively, you can go to the VLAN configuration mode and add the port as member of that VLAN.

```
device(config)#vlan 2
device(config-vlan-2)#tagged ethernet <stack id/slot/port>
```

   To view the VLAN mapping configuration, run the **show vlan-mapping brief** command. A sample output is as follows.

```
device#show vlan-mapping brief
   Total number of vlan(s) mapped: 30
   Total number of HW resource used: 50
   vlan-mapping enabled port(s): 1/1/33 1/1/34 lg10
```

Each port can have one or more VLAN mappings. If a packet reaches the port with a VLAN tag for which there is no mapping present, the packet flows through the service provider network, unmapped. If the network provider wants to restrict this behavior and wants all unmapped packets to be dropped, use the following configuration.

```
device(config-if)# vlan-mapping default drop
```

VLAN mapping considerations

- VLAN mapping is not supported in untagged port.
- CVLAN to SVLAN mapping is always one to one and exclusive for each interface. This means, on a specific interface for a specific CVLAN, there can only be one SVLAN mapped and vice versa. On an interface, more than one CVLANs cannot be mapped to the same SVLAN, and the same CVLAN cannot be mapped to more than one SVLANs.
- Both network start point and end point interfaces must have the same vlan-mapping configuration for translating CVLANs to SVLAN and vice versa.
- If incoming customer traffic is already double tagged, then the mapping is done on the outer tag.
- Tag profile shall not be used in conjunction with vlan-mapping on an interface. This means, the interface on which VLAN-mapping is enabled must not be enabled for tag profile. The default tag in the packet should be 8100, if it should be considered for VLAN mapping.
- If global spanning tree is enabled on the box, on ports where VLAN-Mapping is enabled, no-span should be enabled.
- Vlan mapping feature can't coexist with following features - pms, pvlan, selective qinq, tag-profile based qinq & Dot1x.
- For all forwarding (L2, L3 and other pipelines in packet processor) and L3 purposes, SVLAN is used.

Scaling considerations

The maximum number of C-VLAN to S-VLAN mapping per port limit is 10. The following table highlights the maximum number of VLAN mappings which can be configured in a system.

TABLE 25 Maximum number of VLAN mappings per device

Platform	Total number of VLAN mappings that can be configured in the system
ICX 7850	1024
ICX 7750	1024
ICX 7650	1024
ICX 7450	1024
ICX 7250	1024
ICX 7150	1024

A maximum 10 VLAN mappings can be configured on an interface. However, a typical deployment scenario will need only two or three VLAN mappings per interface. The number of VLAN mapping on a lag is equal to number of member ports multiplied by the number of CVLANs mapping configured on the lag interface. For example, if a lag has 6 ports and 10 CVLANs are mapped to the SVLAN, the total number of mappings is considered as 60.

NOTE
These values are based on the hardware capabilities.

Private VLAN configuration

A private VLAN (PVLAN) is a VLAN that has the properties of standard Layer 2 port-based VLANs but also provides additional control over flooding packets on a VLAN. The following table shows an example of an application using a PVLAN.

NOTE
Flexible authentication is not supported in private VLANs.

FIGURE 98 PVLAN used to secure communication between a workstation and servers

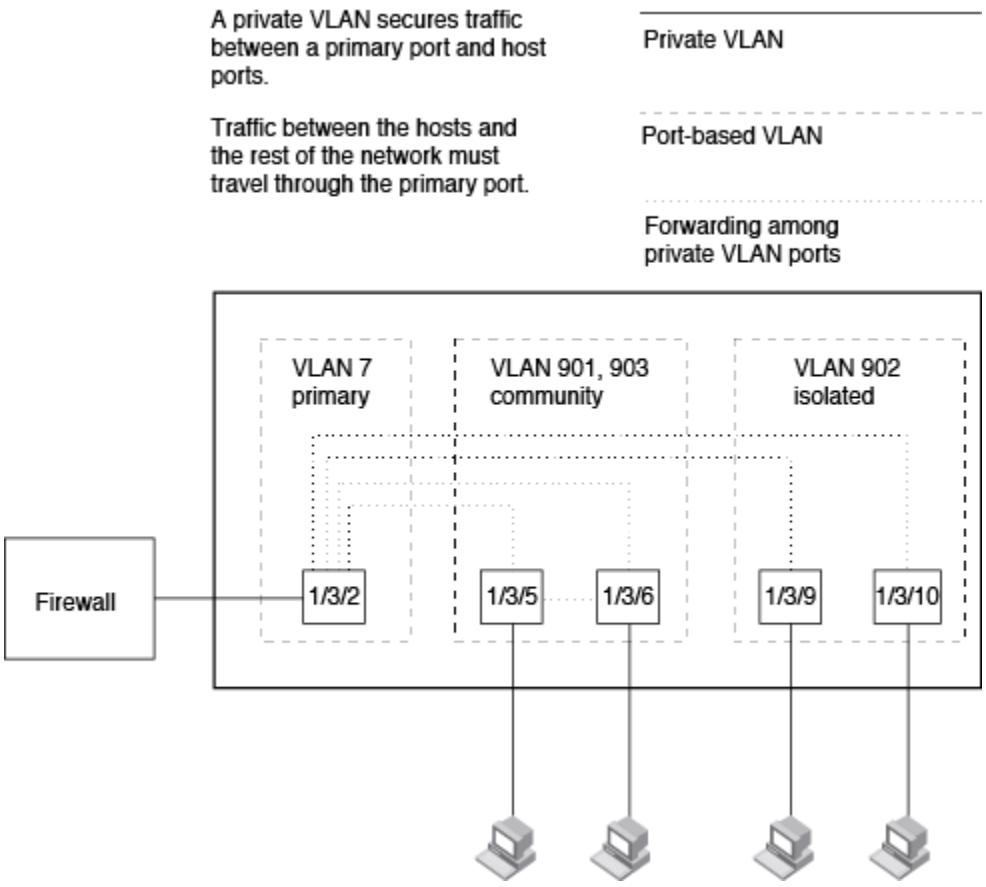

This example uses a PVLAN to secure traffic between hosts and the rest of the network through a firewall. Five ports in this example are members of a PVLAN. The first port (port 1/3/2) is attached to a firewall. The next four ports (ports 1/3/5, 1/3/6, 1/3/9, and 1/3/10) are attached to hosts that rely on the firewall to secure traffic between the hosts and the rest of the network. In this example, two of the hosts (on ports 1/3/5 and 1/3/6) are in a community PVLAN, and thus can communicate with one another as well as through the firewall. The other two hosts (on ports 1/3/9 and 1/3/10), are in an isolated VLAN and thus can communicate only through the firewall. The two hosts are secured from communicating with one another even though they are in the same VLAN.

By default, unknown-unicast, unregistered multicast, and broadcast are flooded in PVLAN.

By default, on all the FastIron platforms, the device will forward broadcast, unregistered multicast, and unknown unicast packets from outside sources into the PVLAN.

You can configure a combination of the following types of PVLANs:

- Primary - The primary PVLAN ports are "promiscuous". They can communicate with all the isolated PVLAN ports and community PVLAN ports in the isolated and community VLANs that are mapped to the promiscuous port.
- Isolated - Broadcasts and unknown unicasts received on isolated ports are sent only to the promiscuous ports and switch - switch ports. They are not flooded to other ports in the isolated VLAN.

NOTE
On all devices, however, private VLANs will act as a normal VLAN and will flood unknown destinations, broadcast and multicast traffic to all ports in the VLAN if the primary VLAN does not have the PVLAN mapping that defines the uplink port for the isolated VLAN.

- Community - Broadcasts and unknown unicasts received on community ports are sent to the primary port and also are flooded to the other ports in the community VLAN.

Each PVLAN must have a primary VLAN. The primary VLAN is the interface between the secured ports and the rest of the network. The PVLAN can have any combination of community and isolated VLANs.

As with regular VLANs, PVLANs can span multiple switches. The PVLAN is treated like any other VLAN by the PVLAN-trunk ports.

NOTE
ISL(Inter-Switch Link) is an alias for PVLAN-trunk ports.

Figure 99 shows an example of a PVLAN network across switches:

- Broadcast, unknown unicast or unregistered multicast traffic from the primary VLAN port is forwarded to all ports in isolated and community VLANs in both the switches.
- Broadcast, unknown unicast or unregistered multicast traffic from an isolated port in switch A is not forwarded to an isolated port in switch A. It will not be forwarded to an isolated port in switch B across the PVLAN-trunk port.
- Broadcast, unknown unicast or unregistered multicast traffic from a community port in switch A will be forwarded to a community port in switch B through the PVLAN-trunk port. It is forwarded to the promiscuous ports and PVLAN-trunk ports of the primary VLAN.

FIGURE 99 PVLAN across switches

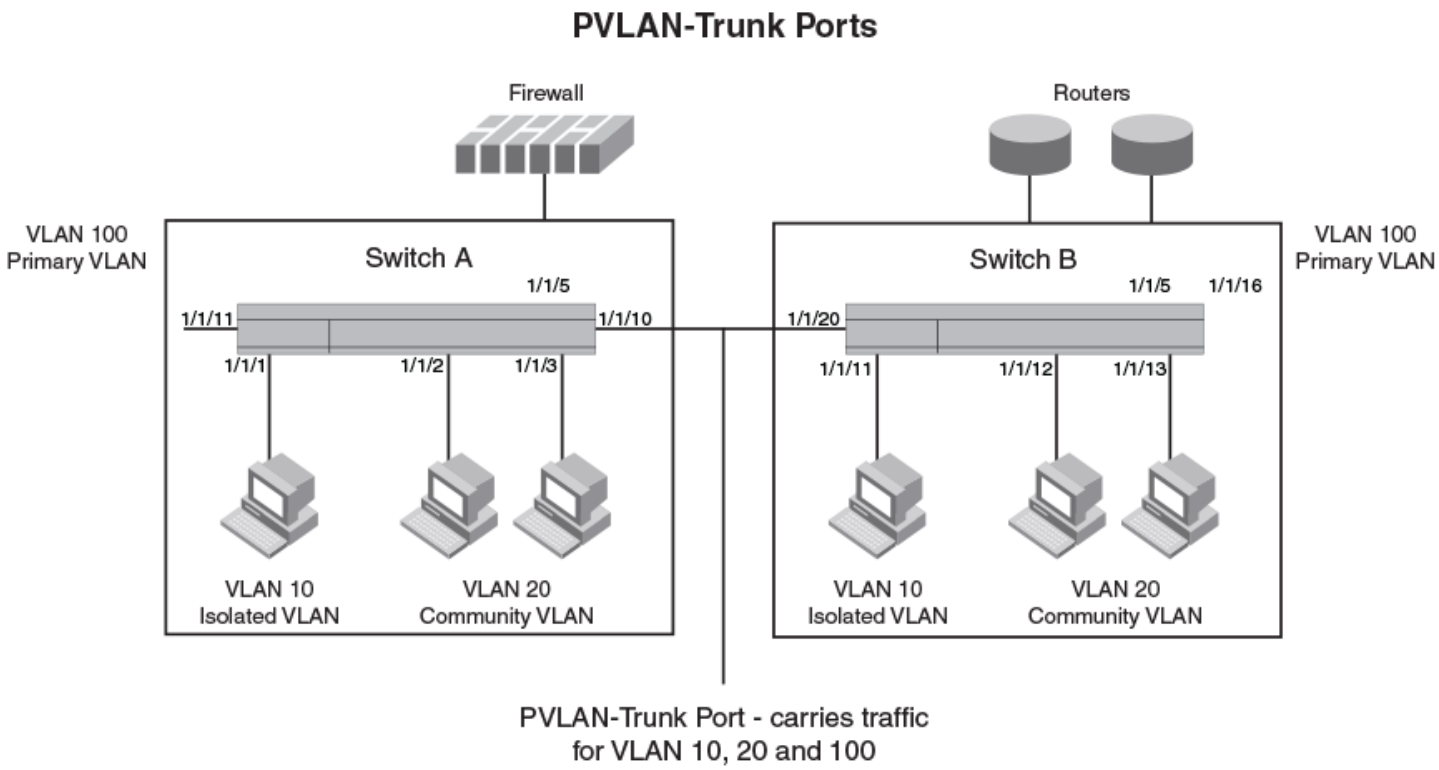

The following figure shows an example PVLAN network with tagged switch-switch link ports.

FIGURE 100 Example PVLAN network with tagged ports

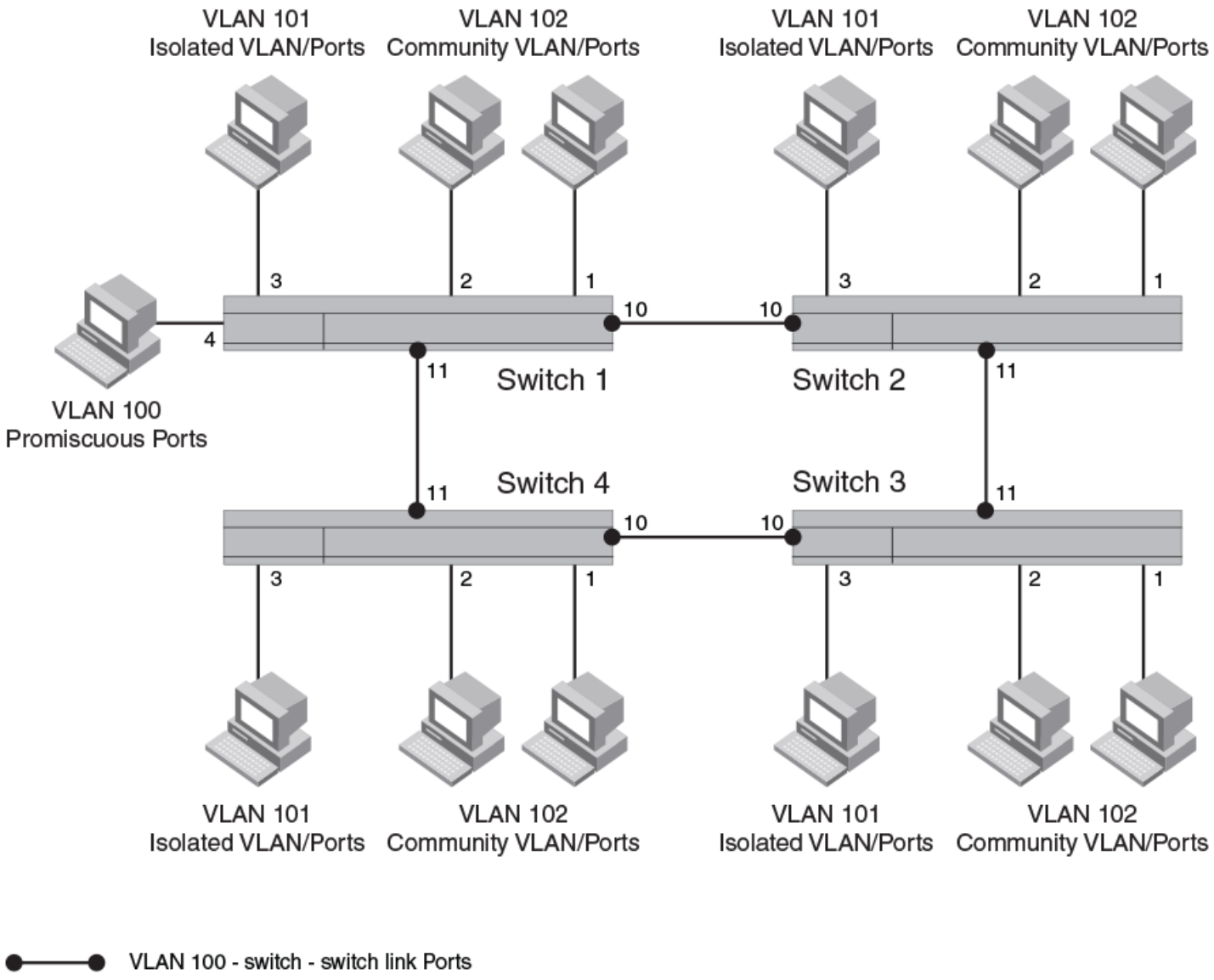

The following table lists the differences between PVLANs and standard VLANs.

TABLE 26 Comparison of PVLANs and standard port-based VLANs

Forwarding behavior	Private VLANs	Standard VLANs
All ports within a VLAN constitute a common layer broadcast domain	No	Yes
Broadcasts and unknown unicasts are forwarded to all the VLAN ports by default	No (isolated VLAN) Yes (community VLAN) Yes (Primary)	Yes

TABLE 26 Comparison of PVLANs and standard port-based VLANs (continued)

Forwarding behavior	Private VLANs	Standard VLANs
Known unicasts	No (isolated VLAN) Yes (community VLAN) Yes (Primary)	Yes

Multiple tagged and untagged support for PVLANs

RUCKUS ICX devices allow users to configure primary or secondary VLAN ports in multiple primary or secondary VLANs of the same type in other PVLAN domains.

NOTE
After adding secondary VLAN ports to multiple secondary VLANs, if the RUCKUS device is downgraded to FastIron 08.0.40 or older versions, errors are generated during parsing as this is not supported prior to FastIron 08.0.50 releases.

Private VLANs allow Layer 2 segregation and also minimizes usage of system VLANs. Using implicit dual-mode ports in a private VLAN enables same ports to carry data or voice traffic.

The following matrix provides information about possible configurations that are allowed in a PVLAN.

NOTE
All user configurations beyond the scope of the table will either not be allowed or will generate a warning message.

TABLE 27 Possible configurations allowed in a PVLAN

PVLAN port	Port type		Primary VLAN of other PVLAN		Isolated VLAN of the other PVLAN	Other community VLAN of the same PVLAN	Community VLAN of the other PVLAN	Regular VLAN
	Tagged	Untagged	Promiscuous ports	ISL ports				
Promiscuous ports	Yes	Yes	Yes	No	No	No	No	No
Inter Switch Link (ISL) ports	Yes	No	No	Yes	No	No	No	No
Isolated VLAN ports	Yes	Yes	NA	NA	Yes	No	No	No
Community VLAN ports	Yes	Yes	NA	NA	No	No	Yes	No

Configuration notes for PVLANs and standard VLANs

- PVLANs are supported on untagged ports on all RUCKUS ICX platforms.
- Normally, in any port-based VLAN, the device floods unknown unicast, unregistered multicast, and broadcast packets in hardware, although selective packets, such as IGMP, may be sent only to the CPU for analysis, based on the IGMP snooping configuration. When protocol is enabled, or if PVLAN mappings are enabled, the RUCKUS ICX device will flood unknown unicast, and unregistered multicast packets in software. The flooding of broadcast or unknown unicast from the community or isolated VLANs to other secondary VLANs will be governed by the PVLAN forwarding rules. The switching is done in hardware and thus the CPU does not enforce packet restrictions.

- RUCKUS ICX devices forward broadcast, unregistered-multicast, and unknown unicast traffic in hardware if PVLAN mappings are enabled. When PVLAN mappings are enabled, multiple MAC entries for the same MAC do not appear in the MAC table, instead all the MAC entries are learned in the primary VLAN.
- To configure a PVLAN, configure each of the component VLANs (isolated, community, and primary) as a separate port-based VLAN:
  - Use standard VLAN configuration commands to create the VLAN and add ports.
  - Identify the PVLAN type (isolated, community, or primary)
  - For the primary VLAN, map the other secondary PVLANs to the ports in the primary VLAN
- A primary VLAN can have multiple ports. All these ports are active, but the ports that will be used depends on the PVLAN mappings. Also, secondary VLANs (isolated and community VLANs) can be mapped to more than one primary VLAN port.
- You can configure PVLANs and implicit dual-mode VLAN ports on the same device. However, the VLAN ports, other than those which are implicit dual-mode in system default VLAN, can be member ports in a PVLAN domain.
- When a implicit dual-mode port in system default VLAN is added to a private VLAN, that port is removed from default VLAN.
- VLAN identifiers configured as part of a PVLAN (primary, isolated, or community) should be consistent across the switched network. The same VLAN identifiers cannot be configured as a normal VLAN or a part of any other PVLAN.
- Implicit dual mode ports which are untagged to non-default VLAN are supported in a private VLAN domain. However, since ISL ports can only be tagged ports, they cannot be enabled on implicit dual-mode ports.
- Member ports in a private VLAN domain can be extended to other domains as long as they belong to the same private VLAN type. Refer to the "Possible configurations allowed in a PVLAN" table to know more about allowed configurations in a PVLAN. All user configurations beyond the scope of the table will either not be allowed or will generate a warning message.
- PVST, when needed in PVLANs, should be enabled on all (primary and secondary) private VLANs across switches.
- Port MAC security is not supported on ports in a private VLAN domain.

TABLE 28 PVLAN support matrix

Platform	Forwarding Type	Tagged Port	Untagged Port	ISL Port	Multiple Promiscuous Port
ICX 7150	Hardware	Yes	Yes	Yes	Yes
ICX 7250	Hardware	Yes	Yes	Yes	Yes
ICX 7450	Hardware	Yes	Yes	Yes	Yes
ICX 7650	Hardware	Yes	Yes	Yes	Yes
ICX 7750	Hardware	Yes	Yes	Yes	Yes
ICX 7850	Hardware	Yes	Yes	Yes	Yes

Configuring an isolated or community PVLAN

You can use the **pvlan type** command to configure the PVLAN as an isolated or community PVLAN. The following are some configuration considerations to be noted for configuring isolated and community PVLANs.

Isolated VLANs

- Every isolated VLAN should be in a unique primary VLAN domain.
- An isolated port can be untagged (implicit-dual-mode) in a non-default VLAN. It need not be a implicit dual-mode port. It can be a purely tagged interface.

  NOTE
  The same is applicable to community and primary VLANs.

- An isolated port (member of an isolated VLAN) communicates with the promiscuous port, if a promiscuous port is configured. If a switch-switch port is configured, the isolated port communicates with the switch-switch port also.

- An isolated VLAN must be associated with the primary VLAN for traffic to be isolated between isolated VLAN ports and to be switched across primary VLAN ports.
- An isolated VLAN is associated with only one primary VLAN in entire switched network.
- A primary VLAN can be associated with only one isolated VLAN. An isolated VLAN can only be mapped to a promiscuous port and a switch-switch link port that belong to the same primary VLAN.

To configure an isolated PVLAN, enter commands such as the following.

```
device(config)# vlan 901
device(config-vlan-901)# untagged ethernet 1/3/5 to 1/3/6
device(config-vlan-901)# pvlan type isolated
```

Community VLANs

- Every community VLAN should be in a unique primary VLAN domain.
- A port being added to the community VLAN is an implicit dual-mode port.
- A community VLAN is associated with only one primary VLAN and to the same primary VLAN in the entire switched network.
- A primary VLAN can be associated with multiple community VLANs.
- A community VLAN must be associated with the primary VLAN for traffic from the community port to be switched across primary VLAN ports

To configure a community PVLAN, enter commands such as the following.

```
device(config)# vlan 901
device(config-vlan-901)# untagged ethernet 1/3/5 to 1/3/6
device(config-vlan-901)# pvlan type community
```

These commands create port-based VLAN 901, add ports 1/3/5 and 1/3/6 to the VLAN as untagged ports, then specify that the VLAN is a community PVLAN.

The **untagged ethernet** or **taggd ethernet** command adds the ports to the VLAN.

The **pvlan type** command specifies that this port-based VLAN is a PVLAN and can be of the following types:

- **community** - Broadcasts and unknown unicasts received on community ports are sent to the primary port and also are flooded to the other ports in the community VLAN.
- **isolated** - Broadcasts and unknown unicasts received on isolated ports are sent only to the primary port. They are not flooded to other ports in the isolated VLAN.
- **primary** - The primary PVLAN ports are "promiscuous". They can communicate with all the isolated PVLAN ports and community PVLAN ports in the isolated and community VLANs that are mapped to the promiscuous port.

Changing from one PVLAN type to another (for example, from primary to community or vice versa) is allowed but the mapping will be removed.

Configuring a Primary or a Community or an Isolated PVLAN

You can configure PVLAN as a primary or a community or an isolated PVLAN using the **pvlan type** keyword from the VLAN configuration mode. By default, PVLAN mapping is not configured.

PVLAN and inter-switch link (ISL) mapping are applicable only to the primary PVLAN.

1. Enter the global configuration mode.

```
device# configure terminal
```

2. Configure VLANs.

```
device(config)# vlan 901
device(config)# vlan 902
device(config)# vlan 903
```

3. Add ports to the VLAN.

```
device(config-vlan-901)# untagged ethernet 1/3/5 to 1/3/6
```

   In the example, ports 1/3/5 and 1/3/6 are added to VLAN 901 as untagged ports.

4. Configure PVLAN as a primary or a community or an isoloted PVLAN.
   a) Configure PVLAN as a primary PVLAN.

```
device(config-vlan-901)# pvlan type primary
```

   b) Configure PVLAN as a community PVLAN.

```
device(config-vlan-902)# pvlan type community
```

   c) Configure PVLAN as an isolated PVLAN.

```
device(config-vlan-903)# pvlan type isolated
```

5. Map the secondary VLAN to the primary VLAN.

```
device(config-vlan-901)# pvlan mapping 101 ethernet 1/3/5
```

6. Configure ISL for the primary VLAN.

```
device(config-vlan-901)# pvlan pvlan-trunk 101 ethernet 1/3/5
```

   The **pvlan pvlan-trunk** command is not allowed on the secondary VLANs.

The following example shows how to configure a primary PVLAN and to identify ISL in the primary PVLAN.

```
device# configure terminal
device(config)# vlan 901
device(config-vlan-901)# untagged ethernet 1/3/2
device(config-vlan-901)# pvlan type primary
device(config-vlan-901)# pvlan mapping 101 ethernet 1/3/2
device(config-vlan-901)# pvlan pvlan-trunk 101 ethernet 1/3/2
```

The following example shows how to configure a community PVLAN.

```
device# configure terminal
device(config)# vlan 902
device(config-vlan-902)# untagged ethernet 1/3/5 to 1/3/6
device(config-vlan-902)# pvlan type community
```

The following example shows how to configure an isolated PVLAN.

```
device(config)# vlan 903
device(config-vlan-903)# untagged ethernet 1/3/5 to 1/3/6
device(config-vlan-903)# pvlan type isolated
```

CLI example for a general PVLAN network

To configure the PVLANs shown in Figure 98 on page 302, enter the following commands.

1. Create a VLAN.

```
device(config)# vlan 901
```

2. Add the untagged ethernet ports to this VLAN.

```
device(config-vlan-901)# untagged ethernet 1/3/5 to 1/3/6
```

3. Configure the PVLAN as community type.

```
device(config-vlan-901)# pvlan type community
device(config-vlan-901)# exit
```

4. Create a VLAN 902 and add the untagged ethernet ports.

```
device(config)# vlan 902
device(config-vlan-902)# untagged ethernet 1/3/9 to 1/3/10
```

5. Configure the VLAN 902 as isolated VLAN in a PVLAN.

```
device(config-vlan-902)# pvlan type isolated
device(config-vlan-902)# exit
```

6. Create another VLAN and add the untagged ethernet ports.

```
device(config)# vlan 903
device(config-vlan-903)# untagged ethernet 1/3/7 to 1/3/8
```

7. Configure the PVLAN as community type.

```
device(config-vlan-903)# pvlan type community
device(config-vlan-903)# exit
```

8. Create a new VLAN and configure as primary PVLAN type. Map the isolated VLAN and community VLAN to the primary VLAN as promiscuous ports.

```
device(config)# vlan 7
device(config-vlan-7)# untagged ethernet 1/3/2
device(config-vlan-7)# pvlan type primary
device(config-vlan-7)# pvlan mapping 901 ethernet 1/3/2
device(config-vlan-7)# pvlan mapping 902 ethernet 1/3/2
device(config-vlan-7)# pvlan mapping 903 ethernet 1/3/2
```

Configuration example for implicit dual-mode PVLAN network

To configure the implicit dual-mode PVLAN network, enter the following commands.

```
device(config)# vlan 101
device(config-vlan-101)# pvlan type isolated
device(config-vlan-101)# tagged ethernet 1/1/25 e 1/1/35
ports ethe 1/1/25 ethe 1/1/35  are removed from default VLAN 3999 to add to Private VLAN 101
Added tagged port(s) ethe 1/1/25 ethe 1/1/35 to port-vlan 101.
device(config-vlan-101)# spanning-tree
device(config-vlan-101)# exit

device(config)# vlan 102
device(config-vlan-102)# pvlan type community
device(config-vlan-102)# spanning-tree
```

```
device(config-vlan-102)#exit

device(config)# vlan 103
device(config-vlan-103)# pvlan type community
device(config-vlan-103)#spanning-tree
device(config-vlan-103)# exit

device(config)# vlan 100
device(config-vlan-100)# pvlan type primary
device(config-vlan-100)# tagged ethernet 1/1/20
ports ethe 1/1/20  are removed from default VLAN 3999 to add to Private VLAN 100
Added tagged port(s) ethe 1/1/20 to port-vlan 100.
device(config-vlan-100)# tag ethernet 1/1/21 e 1/1/31
ports ethe 1/1/21 ethe 1/1/31  are removed from default VLAN 3999 to add to Private VLAN 100
device(config-vlan-100)# pvlan mapping 101 ethernet 1/1/20
device(config-vlan-100)# pvlan mapping 103 ethernet 1/1/20
device(config-vlan-100)# pvlan pvlan-trunk 102 ethernet 1/1/21 ethernet 1/1/31
device(config-vlan-100)# pvlan pvlan-trunk 101 ethernet 1/1/21 ethernet 1/1/31
device(config-vlan-100)# pvlan pvlan-trunk 103 ethernet 1/1/21 ethernet 1/1/31
device(config-vlan-100)# spanning-tree
device(config-vlan-100)# exit

device(config)# vlan 201
device(config-vlan-201)# untagged ethernet 1/1/25 e 1/1/35
Added untagged port(s) ethe 1/1/25 ethe 1/1/35 to port-vlan 201
device(config-vlan-201)# pvlan type isolated
device(config-vlan-201)# spanning-tree
device(config-vlan-201)# exit

device(config)# vlan 202
device(config-vlan-202)# pvlan type community
device(config-vlan-202)# spanning-tree
device(config-vlan-202)# exit

device(config)# vlan 203
device(config-vlan-203)# pvlan type community
device(config-vlan-203)# spanning-tree
device(config-vlan-203)# exit

device(config-vlan-203)# pvlan type community
device(config-vlan-203)# spanning-tree
device(config-vlan-203)# exit

device(config)# vlan 200
device(config-vlan-200)# pvlan type primary
device(config-vlan-200)# untagged ethernet 1/1/20
Added untagged port(s) ethe 1/1/20 to port-vlan 200.
device(config-vlan-200)# tagged e 1/1/21 e 1/1/31
Added tagged port(s) ethe 1/1/21 ethe 1/1/31 to port-vlan 200.
device(config-vlan-200)# pvlan mapping 203 ethernet 1/1/20
device(config-vlan-200)# pvlan mapping 201 ethernet 1/1/20
device(config-vlan-200)# pvlan mapping 202 ethernet 1/1/20
device(config-vlan-200)# pvlan pvlan-trunk 203 ethernet 1/1/21 ethernet 1/1/31
device(config-vlan-200)# pvlan pvlan-trunk 201 ethernet 1/1/21 ethernet 1/1/31
device(config-vlan-200)# pvlan pvlan-trunk 202 ethernet 1/1/21 ethernet 1/1/31
device(config-vlan-200)# spanning-tree
device(config-vlan-200)# exit
```

Multiple promiscuous ports support in private VLANs

Promiscuous ports are member ports of a primary VLAN. Prior versions of the FastIron software supported only a single promiscuous port to be mapped to a secondary VLAN. However, now each secondary VLAN can associate with one or more promiscuous ports.

An isolated VLAN with member ports, when mapped to one or more promiscuous ports of the primary VLAN achieves the same forwarding behavior as that of the uplink ports in a port based VLAN (uplink-switch). The broadcast and unknown unicast traffic from a host (isolated) port is flooded to the uplink (promiscuous) ports only. Due to the hardware forwarding functionality of the private VLAN (in the supported stackable SKUs) this method of achieving the uplink port behavior achieves a better throughput than the conventional method of achieving uplink port.

Mapping secondary VLAN to primary VLAN by multiple promiscuous ports

To map a secondary VLAN to primary VLAN through multiple promiscuous ports, follow these example steps:

1. Add the tagged ethernet ports to a VLAN.
2. Configure the VLAN as isolated.
3. Create VLAN 101.
4. Configure the VLAN 101 as primary VLAN in a PVLAN.
5. Map the isolated VLAN to the primary VLAN with uplink-ports as promiscuous ports. All broadcast and unknown-unicast traffic from isolated VLAN ports will be sent to only promiscuous ports.

In the following example configuration, the isolated VLAN 100 has multiple promiscuous ports 1/1/3 and 1/1/4.

```
device(config)# vlan 100
device(config-vlan-100)# pvlan type isolated
device(config-vlan-100)# tagged ethernet 1/1/1 to 1/1/2
device(config-vlan-100)#vlan 101
device(config-vlan-101)# pvlan type primary
device(config-vlan-101)# tagged ethernet 1/1/3 to 1/1/5
device(config-vlan-101)# pvlan map 100 ethernet 1/1/3
device(config-vlan-101)# pvlan map 100 ethernet 1/1/4
```

PVLAN support over LAG

LAG is supported for Promiscuous, Isolated and Community ports. Private VLAN support over LAG port enhances the bandwidth on promiscuous, ISL and host links and increases link reliability.

This enhanced LAG support provides LAG between access and aggregation switches. It also enables ICX 7K series switches to be used as uplink switch replacements with new and existing private VLAN deployments.

Following is a sample configuration.

```
device(config)#lag ISL dynamic id 1
device(config-lag-ISL)# ports ethe 1/2/3 ethe 1/2/4
LAG ISL deployed successfully!
device(config-lag-ISL)#!
device(config-lag-ISL)#lag promiscuous dynamic id 2
device(config-lag-promiscuous)# ports ethe 1/2/1 ethe 1/2/2
LAG promiscuous deployed successfully!
device(config-lag-promiscuous)#!
device(config-lag-promiscuous)#lag wallplate-1 dynamic id 3
device(config-lag-wallplate-1)# ports ethe 1/1/1 to 1/1/4
LAG wallplate-1 deployed successfully!
device(config-lag-wallplate-1)#!
device(config-lag-wallplate-1)#lag wallplate-2 dynamic id 4
device(config-lag-wallplate-2)# ports ethe 1/1/5 to 1/1/8
LAG wallplate-2 deployed successfully!
device(config-lag-wallplate-2)#!
device(config-lag-wallplate-2)#
device(config-lag-wallplate-2)#
device(config-lag-wallplate-2)#
device(config-lag-wallplate-2)#vlan 101 by port
device(config-vlan-101)# pvlan type isolated
device(config-vlan-101)# tagged lag 3 to 4
Added tagged port(s) lag 3 to 4 to port-vlan 101.
device(config-vlan-101)#!
device(config-vlan-101)#vlan 100 by port
device(config-vlan-100)# pvlan type primary
device(config-vlan-100)# tagged ethe 1/1/10 ethe 1/1/20 lag 1 to 2
Added tagged port(s) ethe 1/1/10 ethe 1/1/20 lag 1 to 2 to port-vlan 100.
device(config-vlan-100)# pvlan mapping  101 ethe 1/1/10 lag 1
device(config-vlan-100)# pvlan pvlan-trunk 101 ethe 1/1/20 lag 2
device(config-vlan-100)#!
```

The existing **pvlan mapping** and **pvlan-trunk** CLIs are modified to accommodate the PVLAN support over LAG. Please refer the *FastIron Command Reference Guide* for more information.

Displaying VLAN Information

After you configure the VLANs, you can verify the configuration using the various **show** commands.

The following example shows how VLANs are displayed in alphanumeric order.

```
device# show run
...
vlan 2 by port
...
vlan 10 by port
...
vlan 100 by port
...
```

The following example shows how to display system-wide VLAN information.

Use the **show vlan** command to display VLAN information for all the VLANs configured on the device.

```
device(config-vlan-4000)# show vlan 10
Total PORT-VLAN entries: 6
Maximum PORT-VLAN entries: 1024

PORT-VLAN 10, Name [None], Priority level0, On
 Untagged Ports: None
   Tagged Ports: (U1/M1)  48
   Tagged Ports: (U3/M1)  48
 Mac-Vlan Ports: None
     Monitoring: Disabled
```

The following example shows how to display global VLAN information.

```
device#  show vlan brief
System-max vlan Params: Max(4095) Default(1024) Current(3210)
Default vlan Id :1
Total Number of Vlan Configured :5
VLANs Configured :1 to 4 10
```

The following example shows how to display VLAN information for specific ports.

```
device# show vlan ethernet 1/7/1
Total PORT-VLAN entries: 3
Maximum PORT-VLAN entries: 8
legend: [S=Slot]
PORT-VLAN 100, Name [None], Priority level0, Spanning tree Off
 Untagged Ports: (S7)  1  2  3  4
   Tagged Ports: None
```

The following example shows how to display a port VLAN membership for a specific port on the device.

```
device# show vlan brief ethernet 1/1/5

Port 1/1/5 is a member of 3 VLANs
VLANs 5 101 4094
Untagged VLAN  : 1
Tagged   VLANs : 5 101 4094
```

NOTE

The untagged VLAN will show the system default VLAN ID even if the port is not part of it.

The following example shows how to display a port implicit dual-mode VLAN membership where the port is untagged in any of the VLAN.

```
device# show interfaces ethernet 7
GigabitEthernet7 is down, line protocol is down
Port down for 2 days 1 hour 40 minutes 5 seconds
  Hardware is GigabitEthernet, address is 0000.00a8.4706 (bia 0000.00a8.4706)
  Configured speed auto, actual unknown, configured duplex fdx, actual unknown
  Configured mdi mode AUTO, actual unknown
  Untagged member of L2 VLAN 3999, port state is BLOCKING
```

NOTE

The port up/down time is required only for physical ports and not for loopback, virtual ethernet (ve), and tunnel ports.

The following example shows how to display a port implicit dual-mode VLAN membership where the port is tagged (explicitly removed from default VLAN).

```
device# show interfaces ethernet 7
GigabitEthernet7 is down, line protocol is down
Port down for 2 days 1 hour 40 minutes 5 seconds
  Hardware is GigabitEthernet, address is 0000.00a8.4706 (bia 0000.00a8.4706)
  Configured speed auto, actual unknown, configured duplex fdx, actual unknown
  Configured mdi mode AUTO, actual unknown
  Tagged member of 1 L2 VLANs, port state is BLOCKING
```

The following example shows how to display a port implicit dual-mode VLAN membership where the port is tagged in some of the VLANs and untagged in any VLAN (implicit dual-mode).

```
device# show interfaces ethernet 7
GigabitEthernet7 is down, line protocol is down
Port down for 2 days 1 hour 40 minutes 5 seconds
  Hardware is GigabitEthernet, address is 0000.00a8.4706 (bia 0000.00a8.4706)
  Configured speed auto, actual unknown, configured duplex fdx, actual unknown
  Configured mdi mode AUTO, actual unknown
  Tagged member of 2 L2 VLANs, untagged in VLAN 3999, port state is BLOCKING
```

The following example shows how to display port default VLAN IDs (PVIDs).

```
device# show interfaces brief
Port  Link    State   Dupl Speed Trunk Tag Pvid Pri MAC            Name
1     Up      Forward Full 1G    None  No  1    0   0000.00a8.4700 a12345678901
2     Up      Forward Full 1G    None  Yes 1    0   0000.00a8.4701
3     Up      Forward Full 1G    None  Yes NA   0   0000.00a8.4702
4     Up      Forward Full 1G    None  Yes NA   0   0000.00a8.4703
5     Up      Forward Full 1G    None  No  2    0   0000.00a8.4704
6     Down    None    None None  None  Yes NA   0   0000.00a8.4705
7     Down    None    None None  None  Yes 4    0   0000.00a8.4706
8     Down    None    None None  None  Yes 4    0   0000.00a8.4707
9     Down    None    None None  None  Yes NA   0   0000.00a8.4708
10    Down    None    None None  None  Yes NA   0   0000.00a8.4709
```

The output of the **show interfaces brief** command lists the port default VLAN IDs (PVIDs) for each port. PVIDs are displayed as follows:

- For untagged ports, the PVID is the VLAN ID number.
- For an interface configured as untagged member in any VLAN, the PVID will be that VLAN ID. If the interface is explicitly removed from default VLAN (i.e. configured as purely tagged), then PVID is not applicable.

The following example shows how to display PVLAN configuration with respect to the primary VLAN and its associated secondary VLANs and to display the member ports, promiscous ports, and the switch-switch link ports of a PVLAN.

```
device# show pvlan
PVLAN: primary VLAN  100
 Port 1/1/4 1/1/10 1/1/11
Community VLAN  102
 Port 1/1/1 1/1/2 1/1/10 1/1/11
 Promiscuous Port: 1/1/4
 Inter switch link Port: 1/1/10 1/1/11
```

```
 BpduGuard enabled Port: 1/1/1 1/1/2
Isolate   VLAN  101
 Port 1/1/3 1/1/10 1/1/11
 Promiscuous Port: 1/1/4
 Inter switch link Port: 1/1/10 1/1/11
 BpduGuard enabled Port: 1/1/1 1/1/2
```

NOTE

The **show pvlan** command is not supported on software forwarding platforms.

VXLAN

- VXLAN Gateway Overview....315
- MAC learning....320
- Quality of Service support....320
- Unsupported features....320
- VXLAN configuration considerations....320
- RIOT using a two-device configuration....322
- Configuring VXLAN....323
- Displaying VXLAN information....326

VXLAN Gateway Overview

Virtual Extensible Local Area Network (VXLAN) is an overlay technology to create a logical Layer 2 network on top of an Layer 3 IP network.

NOTE
VXLAN is supported only on ICX 7750 devices.

VXLAN is, with one exception, compliant with RFC 7348: *Virtual eXtensible Local Area Network (VXLAN): A Framework for Overlaying Virtualized Layer 2 Networks over Layer 3 Networks*. The exception is that RFC 7348 discusses using multicast in the underlay (Layer 3) network for forwarding overlay (Layer 2) network Broadcast, Unknown Unicast and Multicast (BUM) traffic. The FastIron VXLAN implementation uses another approach referred to as "static-ingress replication" for forwarding overlay (Layer 2) network BUM traffic.

Addressing the need for overlay networks in Layer 2 and Layer 3 data center networks that support multi-tenant environments, VXLAN functions as a framework to create a Layer 2 logical network over the existing Layer 3 infrastructure. In this way, VXLAN addresses the scalability requirements of cloud computing.

VXLAN extends the VLAN address space by adding a 24-bit segment ID called a VXLAN Network Identifier (VNI) and enables 16 million VXLAN network segments. The VNI in each frame segregates individual logical networks, allowing millions of individual Layer 2 VXLAN segments to coexist on a common Layer 3 network. Each VLAN is mapped to a unique VNI to extend the Layer 2 VLAN segment to a remote location.

The following figure depicts how VXLAN gateways are used to provide Layer 2 connectivity between two switches separated by a Layer 3 network, so that the users connected to the same VLANs on both switches have the experience of being connected to the same Layer 2 network.

FIGURE 101 VXLAN Gateway

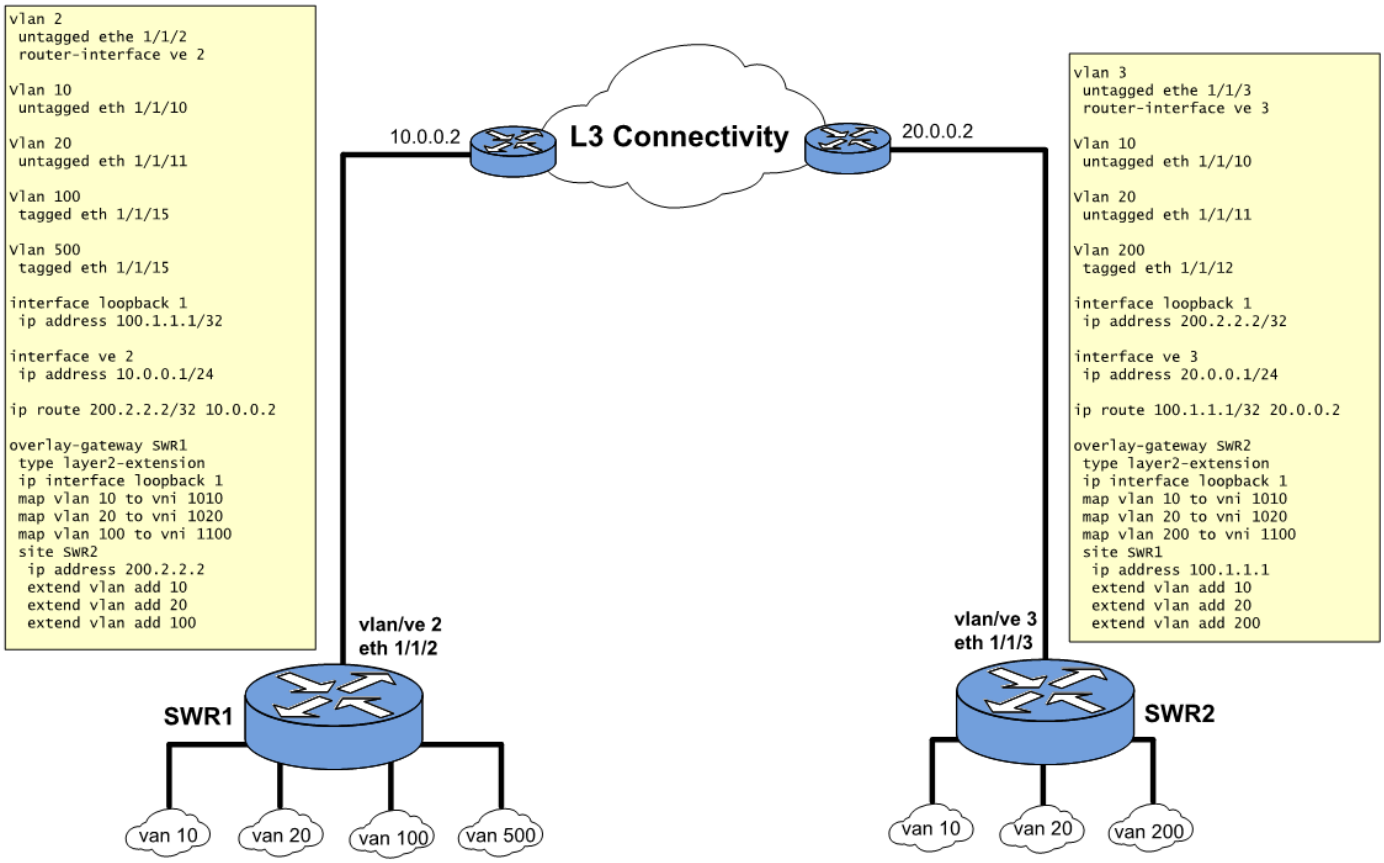

VXLAN Ethernet Frame Encapsulation

VXLAN uses a tunneling method to carry the Layer 2 overlay network traffic over the Layer 3 network. Communication is established between two tunnel endpoints called Virtual Tunnel Endpoints (VTEPs). VXLAN is a MAC Address-in-User Datagram Protocol (MAC-in-UDP) encapsulation, which encapsulates MAC frames at Layer 2 into a Layer 3 UDP header with an outer Ethernet header, outer IP header, outer UDP header, and VXLAN header. The outer IP header contains the corresponding source and destination VTEP IP addresses.

VTEPs are the nodes that provide the encapsulation and decapsulation functions and also map the tenant traffic to the virtual network and vice versa. The tenant's Layer 2 frame is encapsulated with the Layer 3 UDP header to send it to the remote location (VTEP). The remote end decapsulates the outer header, and send the original Layer 2 packet to the remote tenant.

FIGURE 102 VXLAN Tunneling

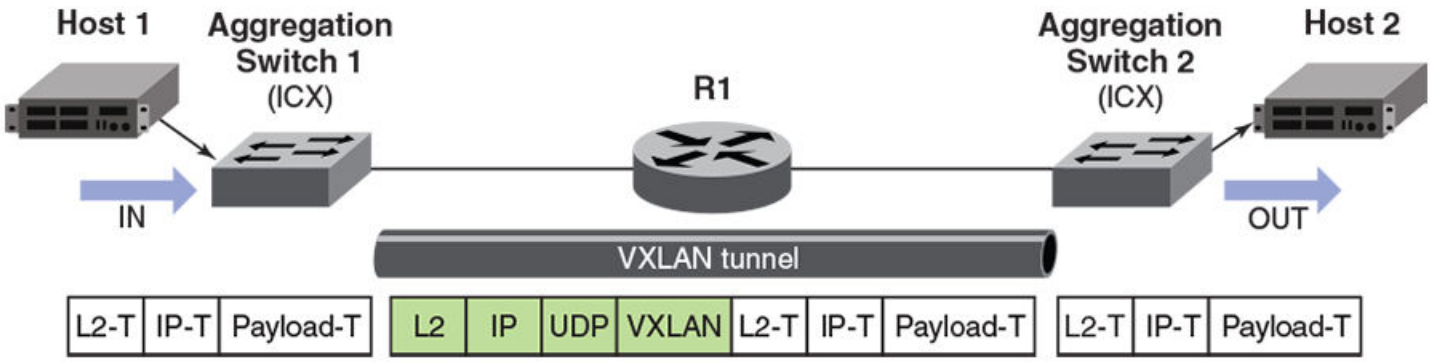

As VXLAN is a tunneling technique, the VXLAN gateway is required to send traffic between VXLAN and a traditional VLAN. Using VXLAN gateway mode in aggregation-switch deployments, you can establish a tunnel at Layer 2 between two VXLAN gateways and extend the VLAN over an underlying Layer 3 infrastructure. The FastIron implementation of the VXLAN gateway allows communication between the VXLAN-aware world and the non-VXLAN-aware world. The FastIron VXLAN gateway provides E-LAN (multipoint-to-multipoint) service using a full mesh connectivity between VTEPs.

The FastIron implementation of VXLAN supports the following:

- **Multiple VNIs over the same VXLAN tunnel**: RUCKUS supports the multiplex and demultiplex of multiple VNIs over the same VXLAN tunnel. This allows better scaling of the deployment.
- **Multiple VXLAN tunnels**: RUCKUS supports multiple VXLAN tunnels on a VTEP. These tunnels can be over the same or different uplink ports. However, multiple Layer 2 tunnels are supported with the following constraint:

  If two or more Layer 2 tunnels share the same outgoing interface (Layer 2 port), the outer Layer 2 header (Destination MAC, Source MAC, and VLAN header) must be the same for both tunnels. In other words, the Layer 3 outgoing interface, VRF, and the next-hop address must be the same for the two tunnels.
- **VLAN translation across VXLAN segment**: Because the VLAN tag is stripped from the Layer 2 (payload) frame before the frame is encapsulated with VXLAN tunnel headers, VXLAN can be used to inter-connect the same Layer 2 subnet that is represented using different VLAN identifiers on each VTEP. For example, as shown in Figure 101, VLAN 100 on VXLAN gateway SWR1 and VLAN 200 on VXLAN gateway SWR2 are inter-connected by mapping those VLANs to the same VNI (1100).
- **Interoperation with other VXLAN implementations**: The FastIron implementation of VXLAN can interoperate with the legacy VXLAN implementations of other vendors, as long as they use the IANA-assigned value of 4789 for the UDP destination port.

Unicast Forwarding in VXLAN Implementations

The following figure illustrates how unicast traffic is forwarded in a FastIron VXLAN implementation.

- In the figure, VLAN 100 is mapped to VNI 864, and the VNI is extended to VTEP-1, VTEP-2, and VTEP-3.
- Host H1 in VLAN 100 on the access side of VTEP-1 sends a packet to Host H3 in VLAN 100 on the access side of VTEP-3.
- Host H1 knows the MAC address of Host H2 via ARP resolution.
- When VTEP-1 tries to forward the packet sent by H1 in VNI 864, it detects that the DMAC is reachable on the tunnel to VTEP-3. It then encapsulates the packet in the VXLAN tunnel to VTEP-3 and forwards it.
- When VTEP-3 receives the encapsulated packet, it removes the VXLAN tunnel header and forwards the payload (the inner packet) in VLAN 100 to Host H3.

FIGURE 103 VXLAN Unicast Traffic Forwarding

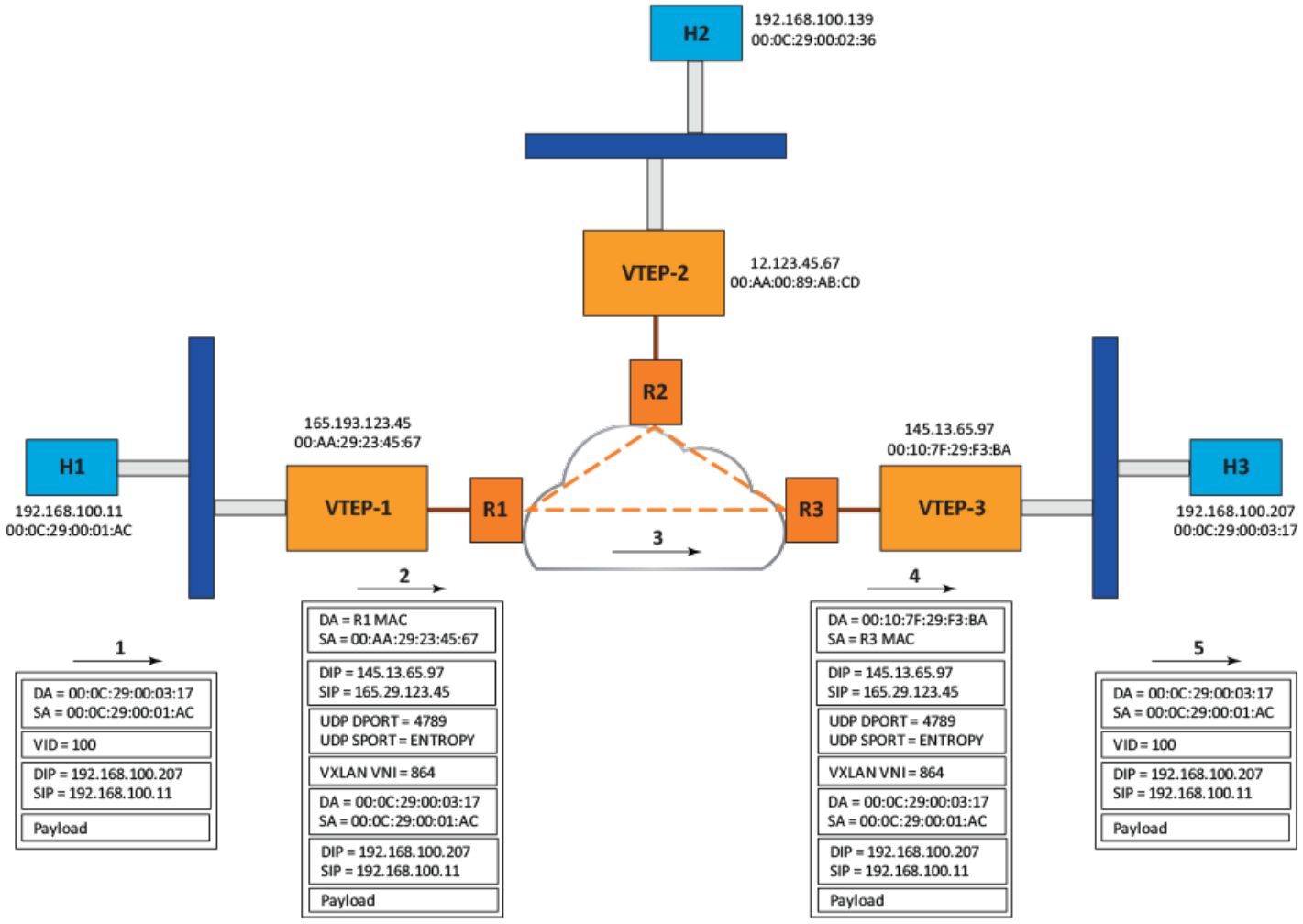

BUM Traffic Forwarding in VXLAN Implementations

In a FastIron VXLAN implementation, multicast traffic is forwarded using the static-ingress replication method.

The following figure illustrates how multicast traffic is forwarded in a VXLAN implementation.

- In the figure, VLANs 100 is mapped to VNI 864, and the VNI is extended to VTEP-1, VTEP-2 and VTEP-3.
- Host H1 in VLAN 100 on the access side of VTEP-1 sends a broadcast packet.
- When VTEP-1 tries to forward the packet sent by H1, it attempts to flood the broadcast packet in the VXLAN segment identified by VNI 864.
- As part of packet flooding to VNI 864, VTEP-1 encapsulates the packet in the VXLAN tunnel to each VTEP to which VNI 864 is extended (here, VTEP-2 and VTEP-3).
  - The DIP in the outer IP header is the unicast IP address.
  - The source VTEP does the replication.
- When VTEP-2 and VTEP-3 receive the encapsulated packet, they remove the VXLAN tunnel header and flood the payload (the inner packet) VLAN 100.

FIGURE 104 VXLAN Multicast Traffic Forwarding

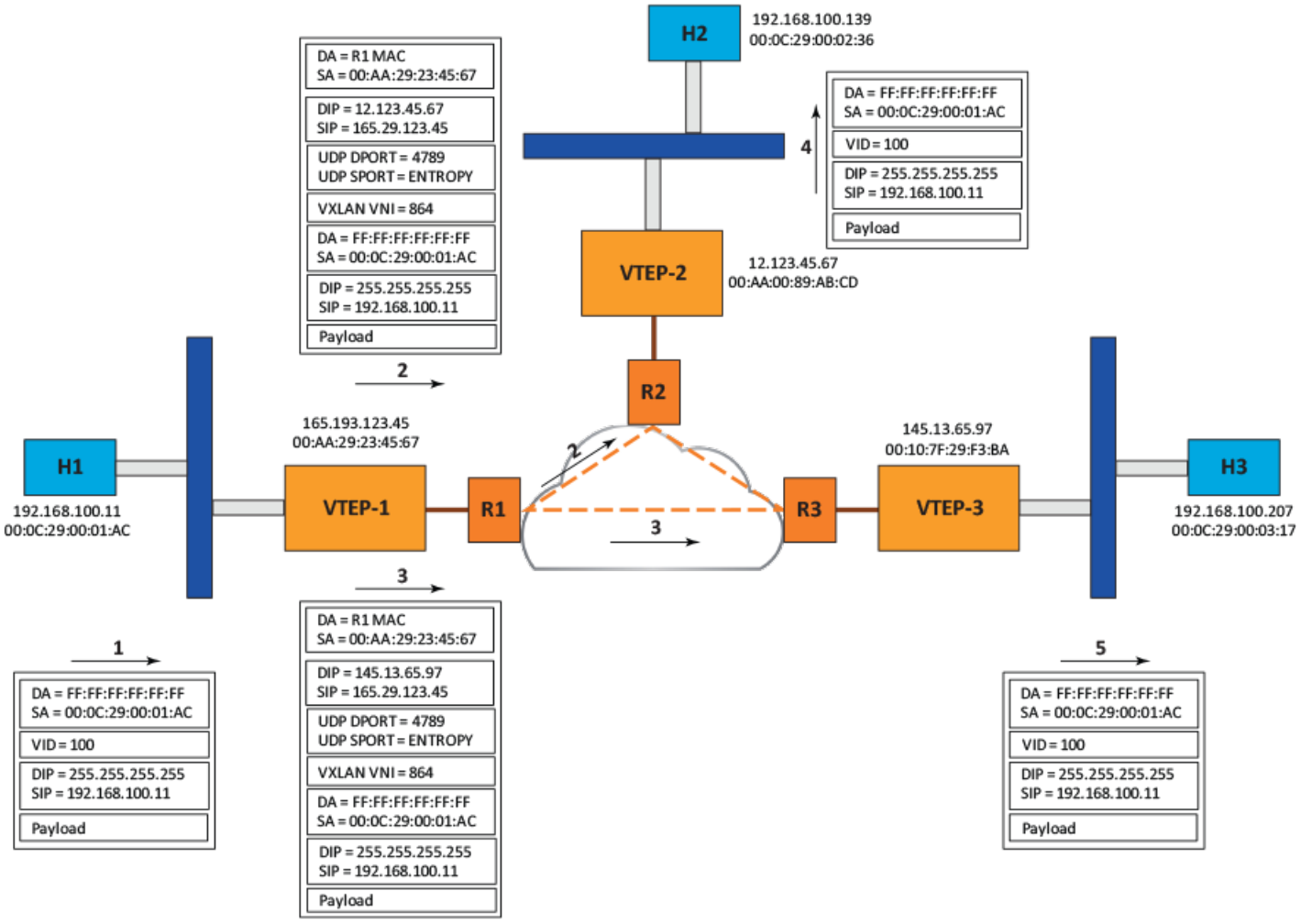

Inner Frame VLAN Tagging

In the VXLAN gateway, the encapsulating VTEP strips the inner VLAN tag of the packet before forwarding it to the remote VTEP. Upon reception, the remote VTEP decapsulates the packets, and a VLAN tag is assigned to the packet based on the one-to-one mapping between the VLAN and the VNI. The assignment of a VLAN tag also depends on whether the access port at the destination is tagged or untagged. If the access port is tagged, the VLAN tag is added after decapsulation and before the frame is sent. If the access port is untagged, an untagged frame is sent to the remote tenant.

Load Balancing Entropy

To enable a level of entropy for the ECMP/LAG load-balancing of the VXLAN tunnel traffic across the VXLAN underlay, RFC 7348 recommends that the UDP source port number of the VXLAN tunneled packet be calculated using a hash value of the Layer 2 and Layer 3 headers of the passenger packet. The FastIron VXLAN gateway supports this approach.

MAC learning

MAC learning is performed on both access and network ports. MAC lookup (or Layer 2 bridging) is also performed for traffic received on access or network ports.

Quality of Service support

The VXLAN-controlled tenant traffic has to compete with the tunneled data traffic. To ensure priority forwarding of VXLAN-controlled tenant traffic, Quality of Service (QoS) marking/remarking is supported. The Layer 2 User Priority and Layer 3 DSCP are copied from inner to outer headers during encapsulation, so that the transport Layer 2 and Layer 3 headers reflect the passenger Layer 2 and Layer 3 priority. For more information on DSCP remarking, see the DSCP Remarking Overview topic in the *RUCKUS FastIron Traffic Management Configuration Guide*.

NOTE
Copying the Layer 2 User Priority from the encapsulating Layer 2 header into the outgoing Layer 2 header (after decapsulation) is not supported. Likewise, copying the Layer 3 DSCP from the encapsulating Layer 3 header into the outgoing Layer 3 header (after de-capsulation) is not supported. However, the DSCP carried in the passenger Layer 3 header is maintained across the VXLAN tunnel.

Unsupported features

The following features are not supported in this VXLAN implementation:

- The ELINE version of VXLAN
- Auto-discovery of VTEPs
- Using multicast for forwarding BUM traffic in the underlay network
- Path MTU discovery on VXLAN tunnels
- Keepalive on VXLAN tunnels
- Forwarding of Layer 2 BPDUs (such as STP and LACP) over VXLAN tunnels

VXLAN configuration considerations

- Only one overlay-gateway is supported.
- Only one-to-one mapping is allowed between VLAN and VNI.
- The default VLAN cannot be mapped to a VNI.
- No ports on the VLAN mapped to VNI can have an IP address configured.
- A VNI can be carried by one or more VXLAN tunnels.
- A loopback interface address must be configured to be used as the source IP address for the VXLAN tunnels on the VXLAN gateway.
- The underlay (or transport) network cannot belong to a user VRF. The loopback interface must belong to the default VRF.
- Routing In and Out of VXLAN tunnels (RIOT) is not supported. As a result, a VLAN with VE configuration cannot be mapped to a VNI. Likewise, VE configuration is not allowed on a VLAN mapped to a VNI.
- Routing functionality for the mapped VLANs should be provided by another router that is not part of the VXLAN gateway.
- VXLAN encapsulation adds approximately 50 bytes of overhead to the MAC frame, which would cause frames to be rejected if the Maximum Transmission Unit (MTU) on the transport network cannot accommodate the extra bytes. Therefore, the MTU on the transport network port must be configured with a value greater than 1550 (1500 + 50) bytes. (The typical host MTU is 1500.)

- Jumbo-frame support in the transport network is required if the overlay applications uses a frame size larger than 1500 bytes.
- A LAG or Ethernet port on the VTEP that is connected to the VXLAN underlay (transport) network cannot be a route-only interface. In other words, the route-only feature cannot be enabled on a LAG or physical port on which remote VTEPs are reachable.
- If multiple VTEPs are reachable via the same Ethernet or LAG port, then the Next-hop (port or LAG id, MAC address, VLAN id) information to reach the VTEPs should be the same.
- Because the static-ingress-replication method is used to send BUM traffic over VXLAN tunnels, all VTEPs must be provisioned in full-mesh mode as far as VLAN extension is concerned.

Scaling considerations

- A maximum of 256 VLANS can be mapped to VNIs.
- A maximum of 32 remote sites (VXLAN tunnels) can be configured.
- The total number of Ethernet or LAG ports in all mapped VLANs cannot exceed 8000.

Protocol considerations

- VXLAN remote sites support IPv4 addressing only.
- The VXLAN gateway feature is not supported in a Campus Fabric configuration. As a result, SPX must be disabled before you can configure an overlay-gateway (you can change the configuration to **no cb spx enable**).
- A VLAN with multicast snooping enabled cannot be mapped to a VNI. Likewise, you cannot enable multicast snooping on a VLAN that is mapped to a VNI. You can configure the **no multicast active** or the **no multicast passive** command to disable mutlicast snooping on a VLAN. If multicast snooping is enabled globally, you can configure the **no ip multicast active**, **no ip multicast passive**, **no ipv6 multicast active**. or **no ipv6 multicast passive** command to disable global multicast snooping.
- VXLAN is not supported on MCT cluster devices.
- A VLAN with **router interface ve** enabled cannot be mapped to a VNI. Likewise, you cannot configure **router ve interface** on a VLAN that is mapped to a VNI.

VXLAN feature support

Functionality on VXLAN enabled VLAN	Support on VXLAN access port	Support on VXLAN network port	Comments
MAC FDB	Yes	Yes	
Mac Learning Disable	Yes	No	
MAC learning rate control	No	No	Feature not supported on FastIron devices
Flow-based MAC address learning	No	No	Feature not supported on FastIron devices
MAC address move notification	Yes	No	
Mac-notification traps	Yes	No	No MIB for VXLAN
Port-based VLANs • - Tagged • - Untagged	Yes	NA	
Default VLAN	No	Yes	VXLAN can't be enabled on default VLAN.
Static MAC	Yes	No	
Static MMAC	No	No	

Functionality on VXLAN enabled VLAN	Support on VXLAN access port	Support on VXLAN network port	Comments
Port MAC security	Yes	No	
Link aggregation - static LAG - LACP - Keep-alive LAG	Yes	NA	L3 Connection to underlay network can be single port, LAG, ECMP.
LAG Hardware Failover	Yes	NA	
802.1D Spanning Tree	Yes	NA	
802.1s Multiple Spanning Tree	Yes	NA	
802.1W Rapid Spanning Tree Protocol (RSTP)	Yes	NA	
PVST/PVST+ compatibility	Yes	NA	
SAV/Q-in-Q	NA	NA	No Q-in-VNI support at this time.
Topology Group	Yes	NA	
VLAN Group	Yes	NA	
VLAN Range	Yes	NA	
Metro Ring Protocol (MRP)	No	NA	
Private VLAN	No	NA	
UDLD	No	NA	
VSRP	No	NA	
Loop Detect	No	NA	
MCT	No	NA	
LOAM	No	NA	
Ethernet remote loopback	No	NA	

Layer 3 Features and Capabilities	Support on VXLAN
Routing on VXLAN enable VLAN	No
ARP	No
IPV6 ND	No
L3 Routing Protocol packets	No

Security Features	Support on VXLAN enabled VLAN
802.1x	No

RIOT using a two-device configuration

To achieve routing functionality equivalent to VXLAN RIOT, a two-device router configuration is recommended. Although an ICX 7750 acting as the VTEP does not provide routing for VLANs mapped to VNIs, a second device can be configured to provide routing for these VLANs. The following figure illustrates this configuration.

- In the figure, VLANs 100 and 101 are mapped to VNIs 864 and 923, respectively.
- Devices R11 and R12 act as the default gateway for hosts in VLAN 100 and VLAN 101 on the access side of VTEP-1 and VTEP-2, respectively.

- Host H1 in VLAN 100 on the access side of VTEP-1 sends a packet to Host H4 in VLAN 101 on the access side of VTEP-2.
  - For the packet, the SMAC is the H1 MAC, and the DMAC is the R11 MAC.
- R11 routes the packet and forwards it in VLAN 101.
  - Here, the packet SMAC is the R11 MAC, and the DMAC is the H4 MAC.
  - The packet VLAN is changed from 100 to 101.
- When VTEP-1 tries to forward the packet sent by R11 in VNI 923, it detects that the DMAC is reachable on the tunnel to VTEP-2. It then encapsulates the packet in the VXLAN tunnel to VTEP-2 and forwards it.
- When VTEP-2 receives the encapsulated packet, it removes the VXLAN tunnel header and forwards the payload (the inner packet) in VLAN 101 to Host H4.

FIGURE 105 Dual-device configuration for VXLAN RIOT

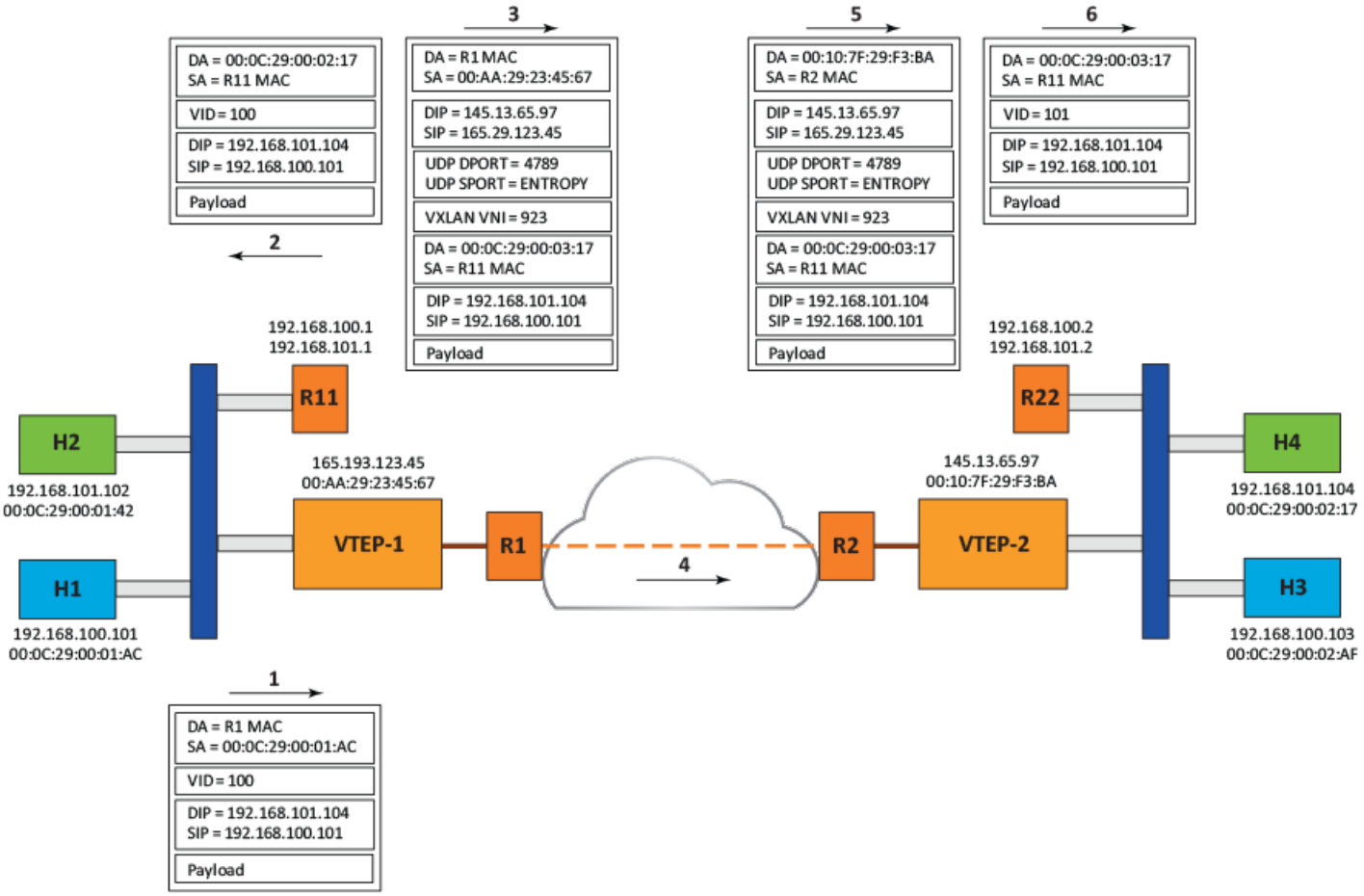

Configuring VXLAN

Configuring a VXLAN gateway on an ICX 7750 device involves the following tasks:

1. Configure a VXLAN gateway record.
2. Set the VXLAN gateway type as **layer2-extension**.

3. Specify the loopback interface whose IP address will be used as the source IP address for VXLAN tunnels.

   NOTE
   The loopback interface must not belong to a user VRF. Be sure the specified IPv4 address is configured on this interface; otherwise, all VXLAN tunnels will be down.

4. Map previously created VLANs to VXLAN Network Identifiers (VNIs).
5. Configure one or more remote site records.
   - For each remote site, specify the IP address of the remote site VTEP. This IP address is used as the destination address for the VXLAN tunnel to that remote site.
   - Make sure the remote VTEP IP address is reachable in the default VRF; otherwise, the VXLAN tunnel to the remote VTEP will be down.
6. Extend each mapped VLAN to the remote site.

Perform the following steps to configure a VXLAN overlay-gateway.

NOTE
Only one overlay-gateway can be configured.

1. Name the overlay-gateway and enter overlay-gateway configuration mode.

```
device# configure terminal
device(config)#overlay-gateway gate1
device(config-overlay-gw-gate1)#
```

2. Set the overlay-gateway type (**layer2-extension**).

```
device(config-overlay-gw-gate1)# type layer2-extension
```

3. Use the **loopback interface** command in overlay-gateway configuration mode to configure the IP interface for the overlay-gateway.

   NOTE
   You must use a loopback interface, rather than an explicit IPv4 address, as the source address.

```
device(config-overlay-gw-gate1)# ip interface loopback 1
```

4. Map a VLAN you intend to extend over the VXLAN segment (that is, over the overlay-gateway) to a VXLAN Network Identifier (VNI).

   NOTE
   A maximum of 256 VLAN, VNI pairs can be configured.

   NOTE
   The default VLAN (typically, VLAN 1) cannot be mapped to a VNI or extended over a VXLAN segment.

```
device(config-overlay-gw-gate1)# map vlan 2 to vni 3
```

5. Create a remote site (VXLAN tunnel), and configure the IP address for the site.

   NOTE
   Only IPv4 tunnels are supported.

   NOTE
   A maximum of 32 remote sites can be created.

```
device(config-overlay-gw-gate1)# site site1
device(config-overlay-gw-gate1-site1)# ip address 67.67.67.1
```

6. Extend the mapped VLAN to the remote site.

```
device(config-overlay-gw-gate1-site1)# extend vlan add 2
```

The following example configures overlay-gateway gate1. It maps VLAN 2 to VNI 3. It configures a VXLAN tunnel by creating a remote site (site1) and configuring its IP address (67.67.67.1) as the destination address. Finally, it extends the mapped VLAN (VLAN 2) over the overlay-gateway.

```
device# configure terminal
device(config)# overlay-gateway gate1
device(config-overlay-gw-gate1)# type layer2-extension
device(config-overlay-gw-gate1)# ip interface loopback 1
device(config-overlay-gw-gate1)# map vlan 2 to vni 3
device(config-overlay-gw-gate1)# site site1
device(config-overlay-gw-gate1-site1)# ip address 67.67.67.1
device(config-overlay-gw-gate1-site1)# extend vlan add 2
device(config-overlay-gw-gate1-site1)# end

device# show running-config overlay-gateway
overlay-gateway gateway1
 type layer2-extension
 ip interface Loopback 1
 map vlan 2 vni 3
 site site1
   ip address 67.67.67.1
   extend vlan add 2

device# show overlay-gateway
Overlay Gateway Name    : gateway1
Type                    : layer2-extension
Source IP Interface     : loopback 1 (vrf: default-vrf, IP address: 32.32.31.13)
Total Mapped Vlans      : 1
Total Sites             : 1
```

Displaying VXLAN information

Use the commands in this section to display information on VXLAN gateways, connections, and tunnels.

1. To display information on VXLAN running-configuration, enter the **show running-config overlay-gateway** command.

```
ICX7750-48F Router# show running-config overlay-gateway
overlay-gateway sanjose
 type layer2-extension
 ip interface loopback 1
 map vlan 101 to vni 25838
 map vlan 102 to vni 67924
 site denver
  ip address 2.2.2.2
  extend vlan add 101
  extend vlan add 102
!
!
ICX7750-48F Router#
```

   The example shows that two VLANs are configured to extended to the remove site denver, which has an IP address of 2.2.2.2.

2. To display brief information on all VXLAN gateways, enter the **show overlay-gateway** command.

   NOTE
   You can also display information for a particular gateway by name.

```
ICX7750-48F Router# show overlay-gateway sanjose

Overlay Gateway Name    : sanjose
Type                    : layer2-extension
Source IP Interface     : loopback 1 (vrf: default-vrf, IP address: 7.7.7.7)
Total Mapped Vlans      : 2
Total Sites             : 1
```

   The example displays brief information for the overlay-gateway sanjose. Information on the VRF and IP address configured are included.

3. To display detailed information for a particular overlay-gateway, enter the **show overlay-gateway** command, the name of the gateway, and the keyword **detail** as shown in the following example.

```
ICX7750-48F Router# show overlay-gateway sanjose detail
Overlay Gateway Name    : sanjose
Type                    : layer2-extension
Source IP Interface     : loopback 1 (vrf: default-vrf, IP address: 7.7.7.7)
Total Mapped Vlans      : 2
Total Sites             : 1
#    VLAN-ID    VN-ID    VFI     Access-Port Extended-Site
-    -------    -----    ---     ----------- -------------
1    101        25838    101     5           1
2    102        67924    102     3           1
#    SiteName                                        IP-Address       Status Ext-Vlans
-    --------                                        ----------       ------ ---------
1    denver                                          2.2.2.2          Up     (101,102)
```

   The example displays detailed output for the same overlay-gateway, including the following information:

   a. For each mapped VLAN, its VNI and VFI (the internal Layer 2 VPN identifier, which will be same as the VLAN identifier, along with number of access (local) ports belonging to that VLAN and the number of sites to which this mapped VLAN is extended

   b. For each site, details such as site name, site IP address, the status of the VXLAN tunnel to that site, and the VLANs that are extended to the site

4. To display information on a particular VLAN, enter the **show overlay-gateway** command followed by the gateway name, the keyword **vlan**, and the VLAN number as shown in the following example.

```
ICX7750-48F Router# show overlay-gateway sanjose vlan 101
Overlay Gateway Name    : sanjose
#    VLAN-ID    VN-ID    VFI     Access-Port Extended-Site
-    -------    -----    ---     ----------- -------------
1    101        25838    101     5           1
```

   For the mapped VLAN, its VNI and VFI (the internal Layer 2 VPN identifier, which will be same as the VLAN identifier) are shown, along with the number of access (local) ports belonging to that VLAN and the number of sites to which this mapped VLAN is extended.

5. To display information on a particular VNI, enter the **show overlay-gateway** command followed by the gateway name, the keyword **vni**, and the VNI number as shown in the following example.

```
ICX7750-48F Router# show overlay-gateway sanjose vni 25838
Overlay Gateway Name    : sanjose
#    VN-ID      VLAN-ID  VFI     Access-Port Extended-Site
-    -----      -------  ---     ----------- -------------
1    25838      101      101     5           1

ICX7750-48F Router# show overlay-gateway sanjose vni 67924
Overlay Gateway Name    : sanjose
#    VN-ID      VLAN-ID  VFI     Access-Port Extended-Site
-    -----      -------  ---     ----------- -------------
1    67924      102      102     3           1
```

   The two examples of command output display information for the two VNIs configured for the overlay-gateway sanjose. For the VNI, its VLAN and VFI (the internal Layer 2 VPN identifier, which will be the same as the VLAN identifier) are shown, along with the number of access (local) ports belonging to the VLAN and the number of sites to which the mapped VLAN is extended.

6. To display information on a remote site, enter the **show overlay-gateway** command followed by the gateway name, the keyword **site**, and the name of the remote site as shown in the following example.

```
ICX7750-48F Router# show overlay-gateway sanjose site denver
Overlay Gateway Site Name     : denver
IP address                    : 2.2.2.2
Status                        : Up
Extended Vlans                :
   101, 102
Total 2 Extended Vlan
```

   The example displays the IP address for the remote site denver, the status of the VXLAN tunnel to that site, and the mapped VLANs that are extended to the site.

```
ICX7750-48F Router# show overlay-gateway sanjose site denver
Overlay Gateway Site Name     : denver
IP address                    : 2.2.2.2
Status                        : Down(No Source Interface)
Extended Vlans                :
   101, 102
Total 2 Extended Vlan
```

   The example shows the same remote site is Down because no source interface has been configured for the remote site.

```
ICX7750-48F Router# show overlay-gateway sanjose site denver
Overlay Gateway Site Name     : denver
IP address                    : 2.2.2.2
Status                        : Down(No Route to Destination)
Extended Vlans                :
   101, 102
Total 2 Extended Vlan
```

   The example shows the same remote site is Down because no route is available to the destination.

7. To display information on MAC addresses learned from a particular remote site, enter the **show mac-address vxlan gw** command followed by the gateway name, the keyword **site**, and the remote site name as shown in the following example.

```
ICX7750-48F Router# show mac-address vxlan gw sanjose site denver
Total active entries from remote-site denver = 2
MAC-Address        VNI         Type         Port
000c.2900.0022     25838       Dynamic      VxL-2.2.2.2
000c.2900.0023     67924       Dynamic      VxL-2.2.2.2
```

   The example shows the MAC addresses learned for the site denver on the VXLAN overlay-gateway sanjose. VNI information is displayed for the MAC address instead of the VLAN. The port information is the IP address of the site denver with the prefix "VxL-".

   Note: MAC addresses learnt from remote site will be shown with port as "VxL-" followed by the IP address of the remote site.

   NOTE
   The IP address for the VXLAN tunnel (remote site) and its configured extended VLANs are also displayed in the output for the basic **show mac-address** command.

8. To display MAC address information for a particular VNI, enter the **show mac-address vxlan vni** command followed by the VNI number as shown in the following example.

```
ICX7750-48F Router# show mac-address vxlan vni 25838
Total active entries from VNI 25838 = 2
MAC-Address      VNI          Type          Port
000c.2900.0011   25838        Dynamic       1/1/48
000c.2900.0022   25838        Dynamic       VxL-2.2.2.2
```

   The example displays two MAC addresses for VNI 25838, one associated with port 1/1/48, which is the local VxLAN access port, and the other associated with the remote site (VxL-2.2.2.2). We know from previous output for the command **show overlay-gateway sanjose vni 25838** that the VNI is associated with local VLAN 101.

9. To display MAC address information for a particular VLAN, enter the **show mac-address vlan** command followed by the vlan number.

```
ICX7750-48F Router# show mac-address vlan 101
Total active entries from VLAN 101 = 2
MAC-Address     Port         Type          VLAN
000c.2900.0011  1/1/48       Dynamic       101
000c.2900.0022  VxL-2.2.2.2  Dynamic       101
```

   The example shows two MAC addresses associated with VLAN 101, one for the local VxLAN access port 1/1/48, and the other for the VXLAN remote site with the destination IP address 2.2.2.2.

   NOTE
   The **clear mac-address** command can be used with all the parameters given in the show mac-address examples in this section to clear old table entries. For example, the command **clear mac-address vlan 101** clears the MAC-address table entries for the VLAN.

VXLAN-related syslog messages

Following are VXLAN-related syslog messages:

TABLE 29 VXLAN-related syslog messages

Event	Syslog Output
VXLAN Tunnel Up	PORT: "VxL-100.1.1.9" state up
VXLAN Tunnel down	PORT: "VxL-100.1.1.9" down due to - tunnel no destination route

Protected Port

- Protected port..... 331
- Configuring protected port..... 333

Protected port

Protected ports restrict all but CPU–bound or –originated traffic, providing isolation to end hosts.

The protected port feature has wide applicability to access point (AP) aggregator switches used for hospitality, public Wi-Fi, campuses, and condominiums.

Protected port is a port-level, per-device/stack only, security feature that restricts communication with a device connected to the port. As a result, even ports that are in identical broadcast domains, once protected, will not communicate with other protected ports, irrespective of their VLAN membership, and instead access the uplink alone. This provides isolation among hosts connected to the ports by restricting all traffic between those hosts.

The following figure illustrates the use of this feature in, for example, the hospitality sector.

Protected Port
Protected port

FIGURE 106 Protected port application

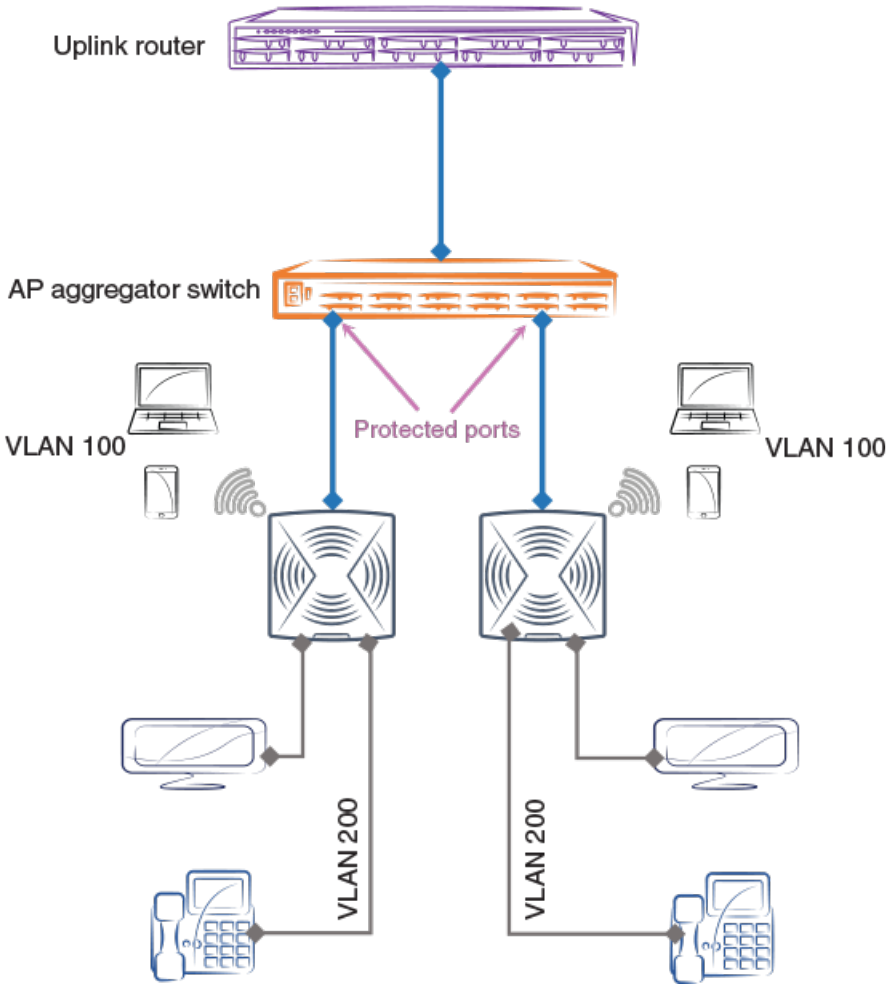

The following configurations are supported with the protected port feature:

- Port MAC security
- 802.1x security
- DHCP snooping
- Control protocols
- Aggregated ports (LAGs)

The following should not be configured as protected ports:

- Uplink ports
- DHCP server ports
- ARP inspection trusted ports
- DHCP snooping trusted ports
- Ports on an active xSTP path in a device
- IGMP/MLD snooping router ports
- IGMP/MLD source ports

In addition, it is recommended that multiple ports (MIF) mode be configured.

The following features are not supported on protected ports:

- Layer 3 interfaces (Port or LAGs with IP addresses are not supported)
- Mirror or monitor ports
- Private VLAN (PVLAN)
- PVLAN extension to protected-port switches
- Virtual Ethernet (VE) and group VE interfaces
- Loopback interfaces
- Management interfaces
- OpenFlow ports
- SPX provider edge (PE) ports
- SPX ZTP–enabled ports
- Multi-Chassis Trunk (MCT) ICL and CCEP ports

Configuring protected port

This task configures protected port on a single and multiple interfaces in MIF mode.

1. Enter global configuration mode.

```
device# configure terminal
```

2. To configure this feature on a single interface, specify an interface. and enter the **protected-port** command.

```
device(config)# interface ethernet 1/1/1
```

3. Enter the **protected-port** command.

```
device(config-if-e1000-1/1/1)# protected-port
```

4. Enter the **show interface ethernet** command to confirm the interface configuration.

```
device# show interface ethernet 1/1/1
GigabitEthernet1/1/1 is down, line protocol is down
  Port down for 3 minute(s) 59 second(s)
  Hardware is GigabitEthernet, address is 748e.f882.f480 (bia 748e.f882.f480)
  Configured speed auto, actual unknown, configured duplex fdx, actual unknown
  Configured mdi mode AUTO, actual unknown
  Member of L2 VLAN ID 1, port is untagged, port state is BLOCKING
 <---output omitted--->
  0 packets output, 0 bytes, 0 underruns
  Transmitted 0 broadcasts, 0 multicasts, 0 unicasts
  0 output errors, 0 collisions
  Relay Agent Information option: Disabled
  Protected: Yes
```

5. Do the following to enable this feature for multiple interfaces in MIF mode (recommended).

```
device(config)# interface ethernet 2/1/1 ethernet 3/1/1
device(config-if-e1000-2/1/1,3/1/1)# protected-port
```

   You can also use ranging, as in the following example.

```
device(config)# interface ethernet 2/1/1 to ethernet 2/1/48
```

   You can also enable this feature on LAG virtual interface.

```
device(config)# interface lag 1
device(config-lag-if-lg1)# protected-port
```

6. Use the **show protected-ports** command to confirm the system-wide configuration.

```
device# show protected-ports
  System-Wide Protected Ports: ethe 1/1/1 ethe 2/1/1 ethe 3/1/1 lag lg1
```

7. Use the **no** form of this command to disable the feature.

```
device(config-if-e1000-2/1/1,3/1/1)# no protected-port

device(config-lag-if-lg1)# no protected-port
```



© 2022 CommScope, Inc. All rights reserved.
350 West Java Dr., Sunnyvale, CA 94089 USA
https://www.commscope.com