CONFIGURATION GUIDE

Ruckus FastIron Campus Fabric Configuration Guide, 08.0.70

Supporting FastIron Software Release 08.0.70

Part Number: 53-1005303-04
Publication Date: 29 June 2018

Copyright, Trademark and Proprietary Rights Information

© 2018 ARRIS Enterprises LLC. All rights reserved.

No part of this content may be reproduced in any form or by any means or used to make any derivative work (such as translation, transformation, or adaptation) without written permission from ARRIS International plc and/or its affiliates ("ARRIS"). ARRIS reserves the right to revise or change this content from time to time without obligation on the part of ARRIS to provide notification of such revision or change.

Export Restrictions

These products and associated technical data (in print or electronic form) may be subject to export control laws of the United States of America. It is your responsibility to determine the applicable regulations and to comply with them. The following notice is applicable for all products or technology subject to export control:

These items are controlled by the U.S. Government and authorized for export only to the country of ultimate destination for use by the ultimate consignee or end-user(s) herein identified. They may not be resold, transferred, or otherwise disposed of, to any other country or to any person other than the authorized ultimate consignee or end-user(s), either in their original form or after being incorporated into other items, without first obtaining approval from the U.S. government or as otherwise authorized by U.S. law and regulations.

Disclaimer

THIS CONTENT AND ASSOCIATED PRODUCTS OR SERVICES ("MATERIALS"), ARE PROVIDED "AS IS" AND WITHOUT WARRANTIES OF ANY KIND, WHETHER EXPRESS OR IMPLIED. TO THE FULLEST EXTENT PERMISSIBLE PURSUANT TO APPLICABLE LAW, ARRIS DISCLAIMS ALL WARRANTIES, EXPRESS OR IMPLIED, INCLUDING, BUT NOT LIMITED TO, IMPLIED WARRANTIES OF MERCHANTABILITY AND FITNESS FOR A PARTICULAR PURPOSE, TITLE, NON-INFRINGEMENT, FREEDOM FROM COMPUTER VIRUS, AND WARRANTIES ARISING FROM COURSE OF DEALING OR COURSE OF PERFORMANCE. ARRIS does not represent or warrant that the functions described or contained in the Materials will be uninterrupted or error-free, that defects will be corrected, or are free of viruses or other harmful components. ARRIS does not make any warranties or representations regarding the use of the Materials in terms of their completeness, correctness, accuracy, adequacy, usefulness, timeliness, reliability or otherwise. As a condition of your use of the Materials, you warrant to ARRIS that you will not make use thereof for any purpose that is unlawful or prohibited by their associated terms of use.

Limitation of Liability

IN NO EVENT SHALL ARRIS, ARRIS AFFILIATES, OR THEIR OFFICERS, DIRECTORS, EMPLOYEES, AGENTS, SUPPLIERS, LICENSORS AND THIRD PARTY PARTNERS, BE LIABLE FOR ANY DIRECT, INDIRECT, SPECIAL, PUNITIVE, INCIDENTAL, EXEMPLARY OR CONSEQUENTIAL DAMAGES, OR ANY DAMAGES WHATSOEVER, EVEN IF ARRIS HAS BEEN PREVIOUSLY ADVISED OF THE POSSIBILITY OF SUCH DAMAGES, WHETHER IN AN ACTION UNDER CONTRACT, TORT, OR ANY OTHER THEORY ARISING FROM YOUR ACCESS TO, OR USE OF, THE MATERIALS. Because some jurisdictions do not allow limitations on how long an implied warranty lasts, or the exclusion or limitation of liability for consequential or incidental damages, some of the above limitations may not apply to you.

Trademarks

ARRIS, the ARRIS logo, Ruckus, Ruckus Wireless, Ruckus Networks, Ruckus logo, the Big Dog design, BeamFlex, ChannelFly, EdgeIron, FastIron, HyperEdge, ICX, IronPoint, OPENG, SmartCell, Unleashed, Xclaim, ZoneFlex are trademarks of ARRIS International plc and/or its affiliates. Wi-Fi Alliance, Wi-Fi, the Wi-Fi logo, the Wi-Fi CERTIFIED logo, Wi-Fi Protected Access (WPA), the Wi-Fi Protected Setup logo, and WMM are registered trademarks of Wi-Fi Alliance. Wi-Fi Protected Setup™, Wi-Fi Multimedia™, and WPA2™ are trademarks of Wi-Fi Alliance. All other trademarks are the property of their respective owners.

Contents

Preface **7**
- Document Conventions 7
  - Notes, Cautions, and Warnings 7
- Command Syntax Conventions 8
- Document Feedback 8
- Ruckus Product Documentation Resources 8
- Online Training Resources 9
- Contacting Ruckus Customer Services and Support 9
  - What Support Do I Need? 9
  - Open a Case 9
  - Self-Service Resources 9

About This Guide **11**
- Supported hardware and software 11
- What's new in this document 11

Campus Fabric Overview **13**
- Campus Fabric 13
- FastIron devices and Campus Fabric communication 15
- Campus Fabric roles and communication protocols 16
  - Control and Status Protocol 17
- Campus Fabric data path 18
- Campus Fabric terminology 20

Planning Considerations for a Campus Fabric Domain **23**
- Campus Fabric licensing 23
  - License inheritance 23
  - ICX 7150 and ICX 7250 PoD licenses 23
  - Converting ICX 7150 or ICX 7250 1-Gbps SPX links to 10-Gbps links 23
- Campus Fabric scalability 25
- SPX port combinations 26
- Control bridge considerations 26
- Port extender considerations 27
- Campus Fabric topology overview 27
  - Rules governing Campus Fabric topology 29
  - Supported CB-PE LAG topologies 30
  - Supported PE ring topology 32
  - PE ring topology limitations 33
  - Traffic flow in a PE ring topology 33
  - Best practices for PE ring configuration 34
  - Topologies not supported by Campus Fabric 35
  - Topologies handled by zero-touch or SPX interactive-setup 38

Campus Fabric Configuration Overview and Interactive Configuration **41**
- Campus Fabric configuration overview 41
  - SPX interactive-setup 42
  - Zero-touch deployment 42
  - Manual configuration 42

Differences in Campus Fabric configuration practices....42
Protecting a unit from being discovered....44
Zero-touch and SPX interactive-setup topology requirements....45
Zero-touch and SPX interactive-setup for PE units with live traffic....45
Invalid topologies that can be handled by SPX interactive-setup....46
Special cases where a link can be removed to select all new units....46
SPX LAG splits and merges....48
Zero-touch and SPX interactive-setup deployment considerations....51
Zero-touch and SPX interactive-setup deployment limitation....51
Zero-touch and SPX interactive-setup deployment recommendations....52
Zero-touch configuration....53
Topologies that support zero-touch configuration....53
Additional zero-touch considerations....53
Using zero-touch to add PE units....54
SPX interactive-setup....58
Changing PE IDs with SPX interactive-setup....58
Configuring SPX to move PE units without changing IDs....63
Converting a stack to a PE chain or ring....64
Converting a PE chain or chains to a ring....67
Downloading images to new units before converting them to PEs with SPX interactive-setup or zero-touch provisioning 68

Campus Fabric Manual Configuration....73
Enabling and configuring the control bridge....73
Adding a reserved PE configuration on the CB....74
How PE units join a Campus Fabric domain....75
How the CB applies a reserved configuration....76
If the PE unit has no reserved configuration....76
If the PE unit has a different software image....76
Manually enabling and configuring PE units....76
SPX port and LAG configuration rules....82
Configuration changes in PE mode before joining the CB....83
Regular, Provisional-PE, and PE mode....83
Dynamic versus static SPX configuration....86
Campus Fabric detailed manual configuration example....87
CB configuration....87
PE configuration....90

Campus Fabric Considerations for Layer 2, Layer 3, Multicast, Security, and QoS....93
Campus Fabric Layer 2 considerations....93
Campus Fabric Layer 3 unicast considerations....95
Campus Fabric and IP multicast considerations....96
Multicast E-CID and IEEE 802.1BR....96
General Campus Fabric multicast considerations....96
Considerations for multicast forwarding on PE units....97
Campus Fabric security considerations....97
Security design considerations....98
Security performance considerations....98
Additional security considerations....98
Campus Fabric QoS considerations....99
QoS classifications for Campus Fabric PE ports....99

QoS features under Campus Fabric 99
QoS for SPX ports 99
Performance impact 100
Control packets under SPX 100

Campus Fabric Management 101
Logging in through the console port 101
Using the remote CB console 102
Handling nonoperational PE units 102
Assigning an ID to a PE unit 103
Assigning a PE ID that has been taken 104
Replacing a PE unit 104
Converting a unit to serve as a replacement PE 105
Replacing PE units with the zero-touch or SPX interactive utility 105
Moving a PE unit and retaining its ID (manual methods) 109
Method 1: Prepare a new topology by reconfiguring PE IDs on the CB 110
Method 2: Allow suggested ID or previous unit ID assignment 110
Removing a PE ring and its configuration 111
Configuring SPX ports and LAGs on a live system 120
Campus Fabric (SPX) image upgrade 121
Auto image copy considerations 121
Disabling or re-enabling the auto image copy process for a Campus Fabric (SPX) configuration 122
Configuring a TFTP server for Campus Fabric (SPX) auto image copy 122
Manual upgrade of Campus Fabric (SPX) images using a manifest file 123
Unconfiguring the CB stack or PE units 125
Removing SPX configuration from PE units 125
Removing SPX configuration from all units 127
Removing stacking configuration 127
CB stack merges and breaks 127
CB stack merges 127
CB stack breaks 127
Displaying Campus Fabric (SPX) information 128
SPX information in show running-config output 128
SPX information in show configuration command output 129
Displaying regular mode configuration from a PE unit 129
Displaying information with the show spx command 130
Using show commands for operational analysis 136
Campus Fabric mirroring overview 138
Mirroring in a Campus Fabric domain 138
MIB support for Campus Fabric 802.1br SPX configurations 139

Campus Fabric Troubleshooting 141
Enabling and using SPX monitoring 141
System validation of network changes 142
Sample show spx-mon output indicating issues 143
Sample show spx-mon history output 149
The SPX monitoring PE join checklist 150
Troubleshooting PE data ports 150
Campus Fabric general troubleshooting checklist 152

Preface

- Document Conventions 7
- Command Syntax Conventions 8
- Document Feedback 8
- Ruckus Product Documentation Resources 8
- Online Training Resources 9
- Contacting Ruckus Customer Services and Support 9

Document Conventions

The following tables list the text and notice conventions that are used throughout this guide.

TABLE 1 Text conventions

Convention	Description	Example
`monospace`	Identifies command syntax examples.	`device(config)# interface ethernet 1/1/6`
bold	User interface (UI) components such as screen or page names, keyboard keys, software buttons, and field names	On the **Start** menu, click **All Programs**.
italics	Publication titles	Refer to the *Ruckus Small Cell Release Notes* for more information

Notes, Cautions, and Warnings

Notes, cautions, and warning statements may be used in this document. They are listed in the order of increasing severity of potential hazards.

NOTE
A NOTE provides a tip, guidance, or advice, emphasizes important information, or provides a reference to related information.

CAUTION
A CAUTION statement alerts you to situations that can be potentially hazardous to you or cause damage to hardware, firmware, software, or data.

DANGER
A DANGER statement indicates conditions or situations that can be potentially lethal or extremely hazardous to you. Safety labels are also attached directly to products to warn of these conditions or situations.

Command Syntax Conventions

Bold and italic text identify command syntax components. Delimiters and operators define groupings of parameters and their logical relationships.

Convention	Description
bold text	Identifies command names, keywords, and command options.
italic text	Identifies a variable.
[ ]	Syntax components displayed within square brackets are optional.
	Default responses to system prompts are enclosed in square brackets.
{ **x** | **y** | **z** }	A choice of required parameters is enclosed in curly brackets separated by vertical bars. You must select one of the options.
x | **y**	A vertical bar separates mutually exclusive elements.
< >	Nonprinting characters, for example, passwords, are enclosed in angle brackets.
...	Repeat the previous element, for example, *member*[*member*...].
\	Indicates a "soft" line break in command examples. If a backslash separates two lines of a command input, enter the entire command at the prompt without the backslash.

Document Feedback

Ruckus is interested in improving its documentation and welcomes your comments and suggestions.

You can email your comments to Ruckus at: docs@ruckuswireless.com

When contacting us, please include the following information:

- Document title and release number
- Document part number (on the cover page)
- Page number (if appropriate)
- For example:
  - Ruckus Small Cell Alarms Guide SC Release 1.3
  - Part number: 800-71306-001
  - Page 88

Ruckus Product Documentation Resources

Visit the Ruckus website to locate related documentation for your product and additional Ruckus resources.

Release Notes and other user documentation are available at https://support.ruckuswireless.com/documents. You can locate documentation by product or perform a text search. Access to Release Notes requires an active support contract and Ruckus Support Portal user account. Other technical documentation content is available without logging into the Ruckus Support Portal.

White papers, data sheets, and other product documentation are available at https://www.ruckuswireless.com.

Online Training Resources

To access a variety of online Ruckus training modules, including free introductory courses to wireless networking essentials, site surveys, and Ruckus products, visit the Ruckus Training Portal at https://training.ruckuswireless.com.

Contacting Ruckus Customer Services and Support

The Customer Services and Support (CSS) organization is available to provide assistance to customers with active warranties on their Ruckus Networks products, and customers and partners with active support contracts.

For product support information and details on contacting the Support Team, go directly to the Support Portal using https://support.ruckuswireless.com, or go to https://www.ruckuswireless.com and select **Support**.

What Support Do I Need?

Technical issues are usually described in terms of priority (or severity). To determine if you need to call and open a case or access the self-service resources use the following criteria:

- Priority 1 (P1)—Critical. Network or service is down and business is impacted. No known workaround. Go to the **Open a Case** section.
- Priority 2 (P2)—High. Network or service is impacted, but not down. Business impact may be high. Workaround may be available. Go to the **Open a Case** section.
- Priority 3 (P3)—Medium. Network or service is moderately impacted, but most business remains functional. Go to the **Self-Service Resources** section.
- Priority 4 (P4)—Low. Request for information, product documentation, or product enhancements. Go to the **Self-Service Resources** section.

Open a Case

When your entire network is down (P1), or severely impacted (P2), call the appropriate telephone number listed below to get help:

- Continental United States: 1-855-782-5871
- Canada: 1-855-782-5871
- Europe, Middle East, Africa, and Asia Pacific, toll-free numbers are available at https://support.ruckuswireless.com/contact-us and Live Chat is also available.

Self-Service Resources

The Support Portal at https://support.ruckuswireless.com/contact-us offers a number of tools to help you to research and resolve problems with your Ruckus products, including:

- Technical Documentation—https://support.ruckuswireless.com/documents
- Community Forums—https://forums.ruckuswireless.com/ruckuswireless/categories
- Knowledge Base Articles—https://support.ruckuswireless.com/answers

- Software Downloads and Release Notes—https://support.ruckuswireless.com/software
- Security Bulletins—https://support.ruckuswireless.com/security

Using these resources will help you to resolve some issues, and will provide TAC with additional data from your troubleshooting analysis if you still require assistance through a support case or RMA. If you still require help, open and manage your case at https://support.ruckuswireless.com/case_management

About This Guide

- Supported hardware and software....11
- What's new in this document....11

Supported hardware and software

The following devices from the Ruckus FastIron product family support Switch Port Extender (SPX) configurations in FastIron 08.0.70 and later releases:

- ICX 7150 switches (ICX 7150)
- ICX 7250 switches (ICX 7250)
- ICX 7450 switches (ICX 7450)
- ICX 7750 switches (ICX 7750)

For information about the specific models and modules supported in a product family, refer to the hardware installation guide for that product family.

What's new in this document

The following tables provide descriptions of information introduced in this guide for FastIron 08.0.70.

TABLE 2 Summary of enhancements in FastIron 08.0.70 version 4

Feature	Description	Location
Update for mirroring limitation	Added note on limitation related to Campus Fabric mirroring of a CB port.	Campus Fabric mirroring overview on page 138

TABLE 3 Summary of enhancements in FastIron 08.0.70 versions 2 and 3

Feature	Description	Location
Updates	Editorial updates	Throughout the guide

TABLE 4 Summary of enhancements in FastIron 08.0.70

Feature	Description	Location
ICX 7150 devices as PE	All ICX 7150 models can be configured as PE units. SPX LAGs on ICX 7150 PEs are limited to eight ports.	Throughout the guide
Zero-touch provisioning and SPX interactive-setup interoperation between releases	From this release forward, both zero-touch provisioning and SPX interactive-setup can interoperate between major releases.	Refer to Zero-touch and SPX interactive-setup topology requirements on page 45 and Zero-touch and SPX interactive-setup deployment considerations on page 51 for more information on zero-touch provisioning.
Zero-touch provisioning and CPU rate	From this release, zero-touch provisioning can be triggered at any CPU rate.	Refer to Zero-touch and SPX interactive-setup topology requirements on page 45 and Zero-touch and SPX interactive-setup deployment considerations on page 51 for more information on zero-touch provisioning.

TABLE 4 Summary of enhancements in FastIron 08.0.70 (continued)

Feature	Description	Location
Conversion of PE chains to rings	Zero-touch provisioning and SPX interactive-setup can detect new links between the CB and edge PEs or between two edge PEs and create a ring from one or two PE chains.	Refer to Converting a PE chain or chains to a ring on page 67 for more information.
Image upgrade for PE candidates	Standalone units with a different software image can be upgraded to the correct image before being converted to PEs.	Refer to Downloading images to new units before converting them to PEs with SPX interactive-setup or zero-touch provisioning on page 68 for more information.

Campus Fabric Overview

- Campus Fabric 13
- FastIron devices and Campus Fabric communication 15
- Campus Fabric roles and communication protocols 16
- Campus Fabric data path 18
- Campus Fabric terminology 20

Campus Fabric

Campus Fabric is sometimes referred to as Switch Port Extender (SPX).

Campus Fabric creates a more scalable architecture based on IEEE 802.1BR standards. Ruckus Campus Fabric architecture adds ICX 7450, ICX 7250, or ICX 7150 devices configured as port extenders (PEs), or PE units, to a set of ICX 7750 stack units configured as the control bridge. The ICX 7750 control bridge (CB) provides a single point of management for the extended network. Active and standby controller functions are retained and continue to provide hitless recovery as well as extended administrative functions. Campus Fabric greatly increases the number of access devices that the network can support. The distributed CB at the center of Campus Fabric architecture manages PE units and hundreds to thousands of ports at the network edge.

PE units are standards-based devices. Typically lower in cost, PE units rely on the CB for most network functions. As the network expands, new PE units can be detected and added to the network automatically using defined Campus Fabric communication protocols. PE units also inherit Premium-license features from the CB, which further reduces cost.

Campus Fabric architecture simplifies network management by unifying core, aggregation, and access functions. As illustrated in the following figure, a core stack (distributed chassis) serving as the CB connects to downstream Campus Fabric (PE) units that aggregate large numbers of access devices.

FIGURE 1 Campus Fabric domain build-out from an ICX 7750 CB stack

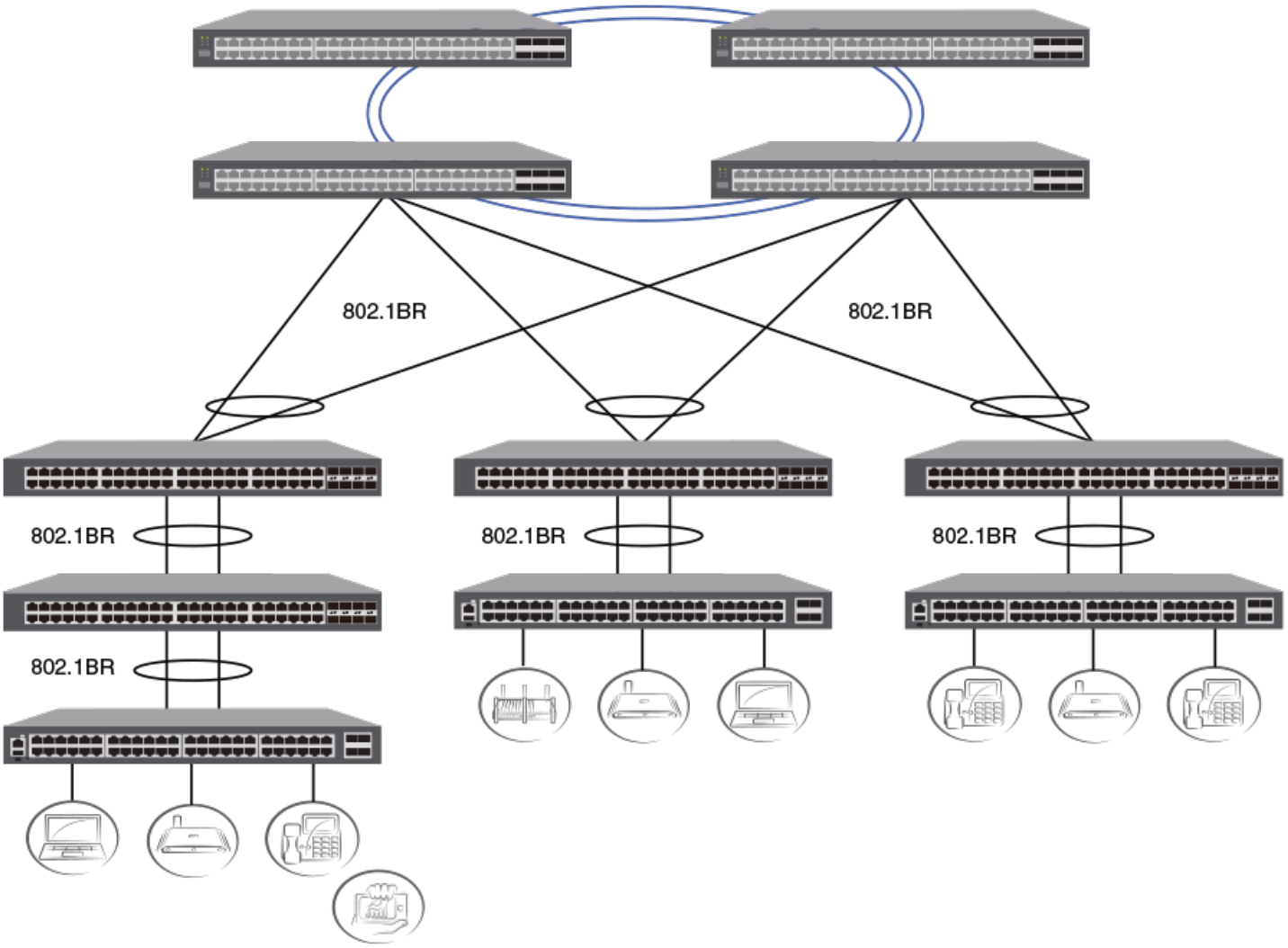

The following figure depicts three separate campuses, each with its own Campus Fabric domain, interconnected with a high-speed backbone.

FIGURE 2 Distributed campus network formed from connected Campus Fabric domains

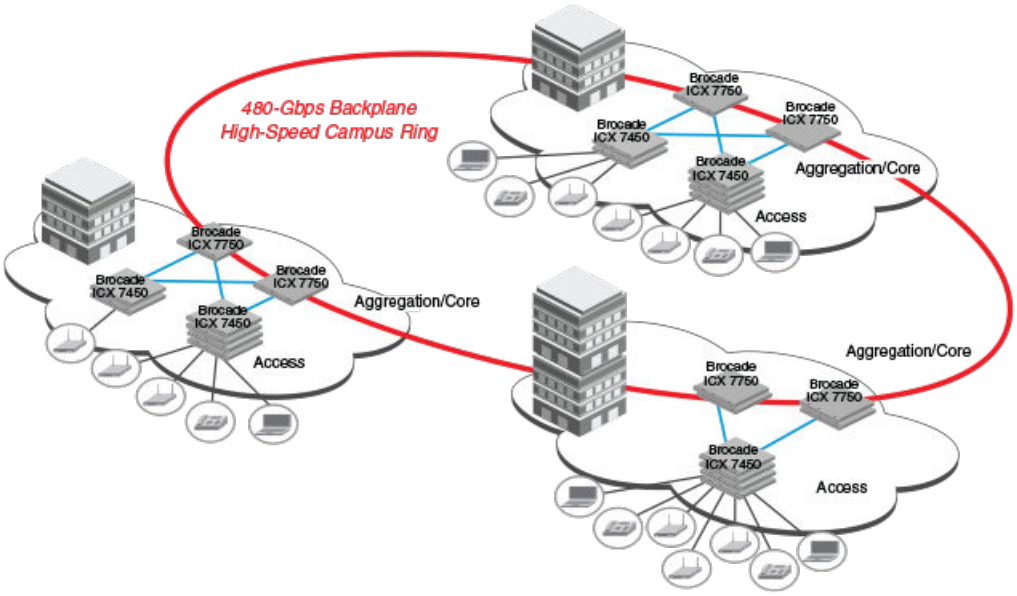

FastIron devices and Campus Fabric communication

An ICX 7750 stack or an ICX 7750 standalone serves as the control bridge (CB) for attached ICX 7450, ICX 7250, or ICX 7150 devices configured as port extender (PE) units. The PE units provide connectivity to PCs, laptops, IP phones, and other access devices.

The CB communicates with the attached PE units downstream using protocols defined in the IEEE 802.1BR standards. PE units in the extended topology tag packets from attached user devices and send the packets upstream to the CB for switching and network management.

FIGURE 3 CB to PE communication

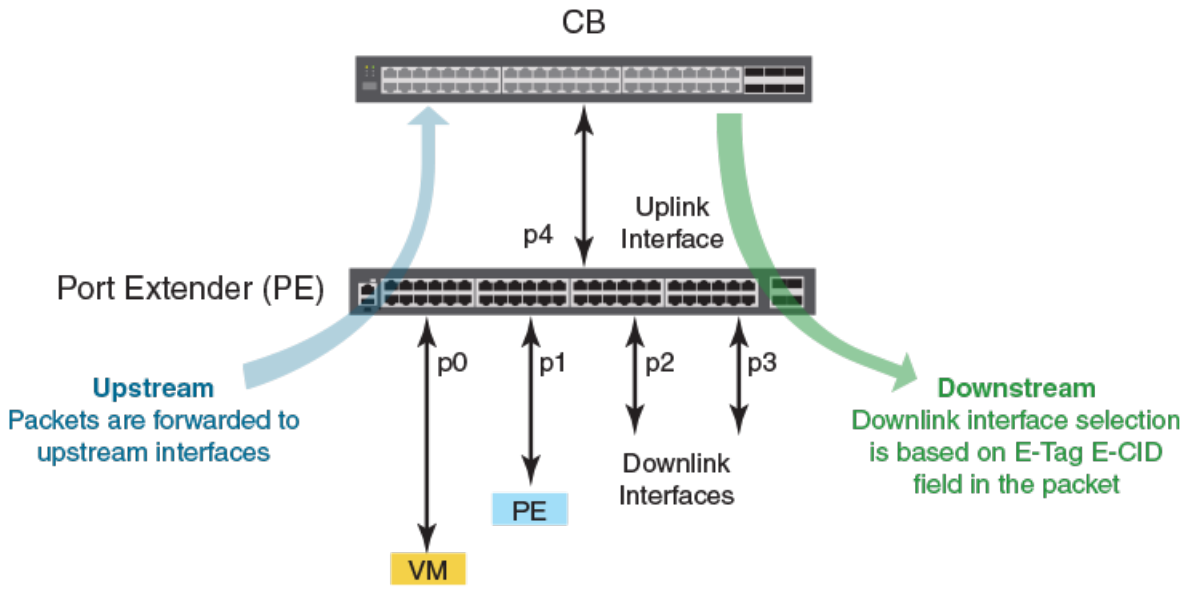

The simplified network topology with centralized control and lower-cost PE devices expands capacity by hundreds of additional access ports.

NOTE
In FastIron 08.0.50, PE port capacity is over 1700 ports per Campus Fabric domain.

Campus Fabric roles and communication protocols

The control bridge (CB) creates, deletes, and manages port extender (PE) ports. It performs switching, routing, and forwarding for PE ports and provides centralized policy management.

The CB uses the Link Level Discovery Protocol (LLDP) to discover PE units. When the CB discovers a PE unit, it connects to the PE unit and creates a control plane using Control and Status Protocol (CSP) over the uplink/cascade port.

Each PE port is managed as a virtual port from the CB perspective. The CB sets up each PE unit for traffic forwarding and creates multicast and unicast forwarding tables through CSP.

The PE provides a data path between end hosts and the CB and uses LLDP to advertise 802.1br capabilities to the CB over the upstream port or LAG. If capabilities match, the PE uses CSP to attach to the CB. The PE reports the number of available ports to the CB, and the CB allocates an E-CID for each PE port. The PE also performs hardware-based multicast and broadcast replication.

NOTE
E-tag packets are assigned EtherType 0x893f.

As illustrated in the following figure, the access PE unit assigns an E-tag that is based on the configured ingress port to traffic forwarded upstream. E-tags provide downlink-to-uplink association. Transit PE units do not assign or change E-tags. PE

downstream forwarding is based on the E-CID fields in the E-tags. The E-tag is removed by the access PE unit at the last hop downstream.

FIGURE 4 E-tags added upstream and removed at the last downstream hop

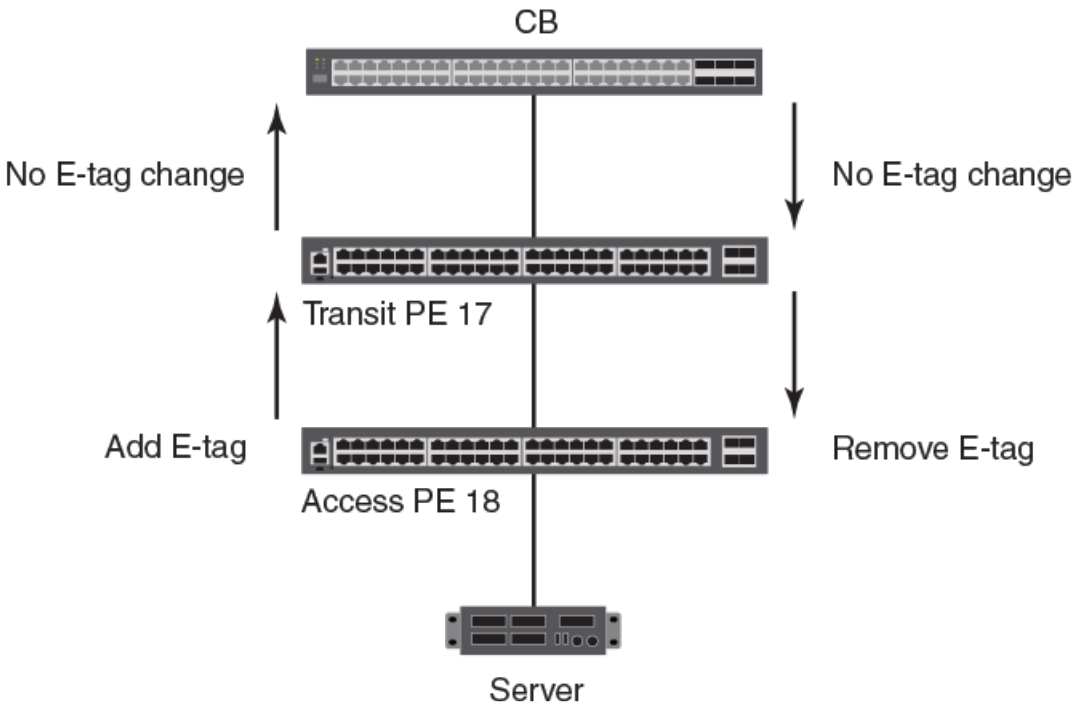

The bidirectional path between the external extended port and the corresponding internal extended port is referred to as an E-channel. E-channels are identified by the E-channel ID (E-CID) in the E-tag (channel range 0x00 0001 to 0x3F FFFE). E-channels can be point-to-point, point-to-multipoint, or multipoint-to-point.

Control and Status Protocol

Control and Status Protocol (CSP) runs between the CB and attached PE units and is used to bring the PE units up or down.

PE CSP executes as an upper layer protocol over the Edge Control Protocol (ECP). ECP provides acknowledgment and retransmission of packets. PE CSP assumes that once a protocol data unit (PDU) is delivered to ECP, the PDU is reliably delivered to its peer.

FIGURE 5 Campus Fabric communication protocol hierarchy

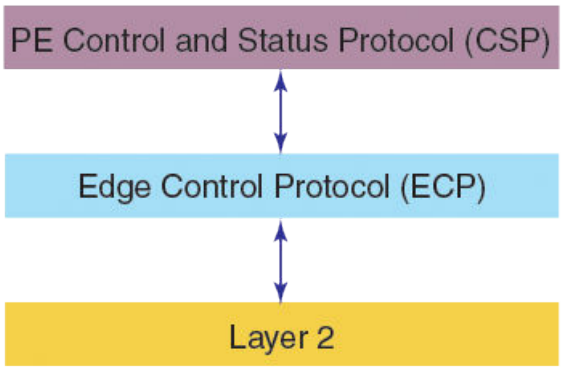

PE CSP is implemented as a simple command and response protocol with protocol information packaged in Type-Length-Value (TLV) triplets. Each PE CSP PDU consists of a command TLV and zero or more additional TLVs. A separate control E-channel is created between the CB and PE unit to carry PDUs, and a single instance of CSP runs between the PE unit and the CB.

Campus Fabric data path

To understand packet flow in a Campus Fabric system, consider what happens when one host pings another through the Campus Fabric network. In the following figure, both hosts are connected to the same PE unit.

FIGURE 6 Campus Fabric data path example

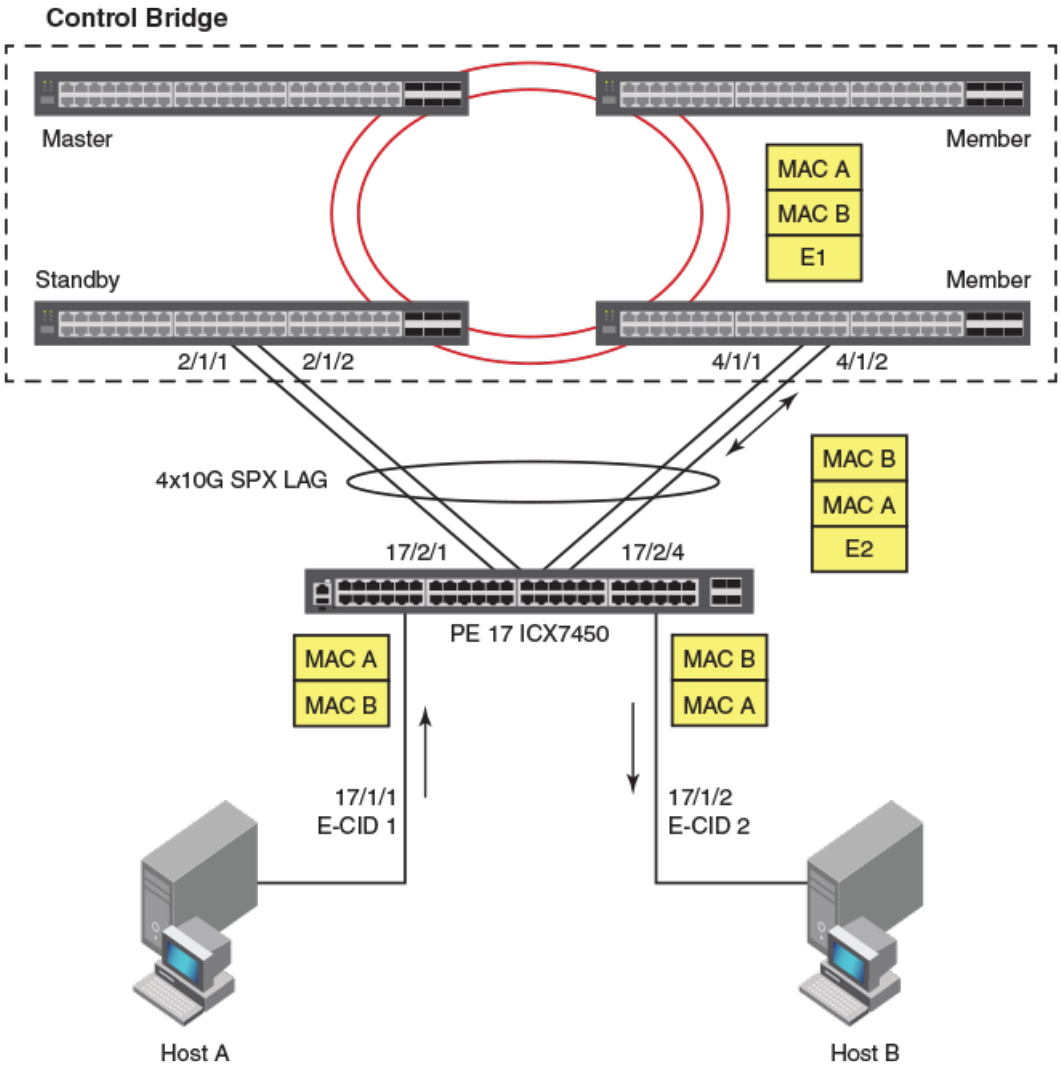

The following steps describe the series of events required for Host A to communicate with Host B.

1. Host A pings Host B.
2. The packet sent by Host A travels over port 17/1/1 to access PE unit 17, where an E-tag with the E-CID 1 is added. (The CB assigned this E-channel ID to the PE port when it was initialized.)
3. PE unit 17 sends the packet to the CB over the Campus Fabric uplink, the SPX LAG. The packet can traverse any of the available links in the LAG. In this example, the packet leaves the PE on port 17/2/4, which is connected to an ICX 7750 with member status in the Control Bridge stack.
4. The receiving ICX 7750 looks up the destination address (MAC B) and associates it in forwarding tables with port 17/1/2. The CB adds E-CID 2 (which is the E-channel ID for port 17/1/2) to the packet and sends it back out to PE unit 17 over the SPX LAG.

NOTE
If the destination IP address is not already present in the CB forwarding tables, the packet is forwarded to the master ICX 7750 (the active controller) to perform necessary Address Resolution Protocol functions. Once the MAC address of the destination is known, the forwarding tables are updated across all CB member switches to facilitate local forwarding of future packets destined for Host B. The same process is used for all Layer 2 and Layer 3 control packets.
If relevant Layer 2 and Layer 3 information is present in forwarding tables, any member of the CB stack can directly forward a packet to its destination without consulting the CB active controller.

5. PE unit 17 looks up E-CID 2 and matches it with port 17/1/2. The PE unit removes the E-tag and sends the ping packet to Host B over port 17/1/2.

Campus Fabric terminology

The following illustration provides a visual description of key Campus Fabric terms.

FIGURE 7 Visual representation of Campus Fabric network terms

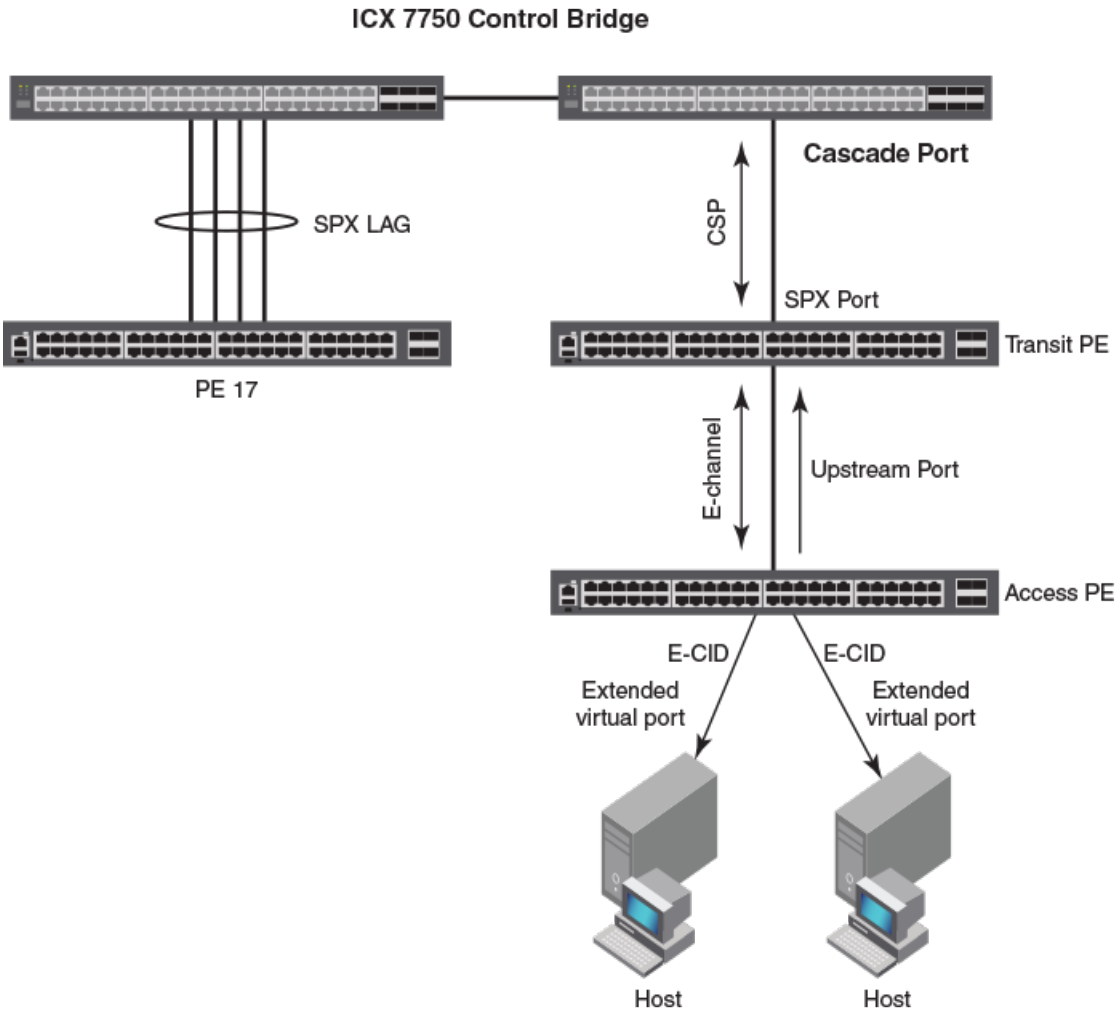

The following table defines terms specific to Campus Fabric.

TABLE 5 Campus Fabric terminology

Term	Meaning
access (or base) port extender	A port extender (PE) connecting to end hosts. An access PE is located at the end of the CB-PE tree.
cascade port	An egress CB port connecting to a PE. (The link between the cascade port and the PE port is configured and displayed as an SPX port or SPX LAG.)
CB port	A control bridge (CB) port on a standalone or a stacking system. A CB port can be on any device in a stacking system.
control bridge	The control bridge (CB) has ports that link to one or more port extender (PE) units. The CB handles traffic to and from PE ports as if these ports were local ports. The control bridge can consist of a standalone ICX 7750 or a traditional stack of ICX 7750 stacking units.
clean unit	A clean unit is a device running switch/router mode that has no startup_config flash during bootup and currently has no startup_config. (That is, the **write memory** command has never been executed on the unit.) You can execute the **erase startup** command followed by the **reload** command without executing the **write memory** command to make a unit to a new unit. A clean unit does not have a password. A clean unit must not contain **stack enable** or **spx cb-enable** configuration.
CSP	Control and Status Protocol. CSP serves as the Campus Fabric communication protocol between the CB master and the PE units in its control plane.
downstream port	A PE port that transmits traffic away from the CB, toward the access PE. A downstream port is an "egress" port from the perspective of the CB.
E-channel	The bidirectional path between the external extended port and the corresponding internal extended port. Each E-channel is identified by an E-channel ID (E-CID) in the E-tag (ranges from 0x0001 to 0x3FFF). E-channels can be point-to-point, point-to-multipoint, or multipoint-to-point.
E-CID	E-channel identifier. An E-CID identifies the PE destination port in CSP.
E-tag	A tag added to SPX packets. The E-tag contains an E-CID.
extended port	A PE port that serves as an access port to a host. Internal extended ports provide connectivity to the ports of the C-VLAN component. External extended ports operate as ports of the extended bridge. Each internal extended port is linked through an E-channel to an external extended port. Additional E-channels provide linkage between an internal extended port and multiple external extended ports in support of multicast frame delivery.
LLDP	Link Level Discovery Protocol. LLDP is the Layer 2 protocol used by the CB to discover and connect to PEs.
master (active controller)	The master of a CB stack. The entire stack is considered one logical device.
ME-CID	Multicast E-channel Identifier. Inserted in the E-tag, it carries a value of 0x1000 to 0x3FFF to indicate a multicast channel.
PE	Port extender. A PE, or PE unit, is a dummy device that contains multiple ports (for example, 24 or 48 ports). A PE forwards all traffic to the connected control bridge (CB). The PE does not perform local switching. The PE can connect to any unit in the CB.
PE mode	A special bootup role that causes a unit to perform as a dummy device. A unit in PE mode does not parse startup_config flash during bootup. It runs protocols, such as LLDP, only available to a PE. In PE mode, the unit does not perform local switching. Most commands and configurations are blocked.
Provisional-PE mode	A temporary mode created when a user configures the **spx pe-enable** command on a unit but has not yet reloaded the unit. Because the unit previously booted up in regular mode, it continues to perform as a regular device until the next reload. That is, the unit still acts like a regular switch or router. Most commands and configurations are blocked the same way as in PE mode.
regular mode	Normal or non-SPX mode. Regular mode describes a standalone unit that behaves like a normal switch or router.

TABLE 5 Campus Fabric terminology (continued)

Term	Meaning
reserved configuration	An SPX unit or stack unit that is configured and appears in output for the **show running-config** command, but which does not physically exist.
SPX	Switch Port Extender. SPX capability, also known as Campus Fabric, is based on IEEE 802.1BR standards and recommendations.
SPX port	A port on a PE that links to the CB or another PE. SPX port is a general term for PE ports and cascade ports. The **spx-port** command is used in CLI configuration to configure either a cascade port or an SPX port.
SPX LAG	A trunk that contains at least two SPX ports. (Cascade ports may be included in an SPX LAG.)
standalone	An individual unit that is not part of a stacking system. A standalone ICX 7750 (or a traditional stack of ICX 7750 devices) can be enabled as an 802.1br control bridge.
TLV	Type-Length-Value information. CSP packets consist of a command TLV and can contain additional TLVs.
transit PE	A PE that is not an access PE. A transit PE aggregates transmissions from downstream PEs.
upstream port	A PE port that connects to a transit PE toward the CB or directly to the CB. An upstream port is an "ingress" port from the perspective of the CB.

Planning Considerations for a Campus Fabric Domain

- Campus Fabric licensing....23
- Campus Fabric scalability....25
- SPX port combinations....26
- Control bridge considerations....26
- Port extender considerations....27
- Campus Fabric topology overview....27

Campus Fabric licensing

No licenses are required for Campus Fabric (802.1br, or SPX); however, ICX 7150 and ICX 7250 devices used as PE units require PoD licenses to bring up ports at 10-Gbps, including SPX links.

NOTE
For details on licensing, refer to the *Ruckus FastIron Software Licensing Guide*.

License inheritance

If a Premium license is enabled on an ICX 7750 in the CB, all ICX 7450, ICX 7250, or ICX 7150 devices attached to the CB and operating as PE units inherit Premium license features.

ICX 7150 and ICX 7250 PoD licenses

ICX 7150 and ICX 7250 Module 2 links run 1-Gbps by default without a license. To connect to a CB over a 10-Gbps SPX link, an ICX 7150 ror ICX 7250 must have a 10-Gbps PoD license installed.

NOTE
ICX 7150-48ZP models ship with two 10-Gbps links; however, additional 10-Gbps ports require a PoD license.

ICX 7150 devices support trust-based licensing through Self Authenticated Upgrade (SAU). Installation is simplified, and related commands differ. Refer to the *Ruckus FastIron Software Licensing Guide* for information on ICX 7150 license options and installation.

Two-port or eight-port 10-Gbps licenses can be pre-loaded on ICX 7250 devices or downloaded using TFTP or SCP as described in the *Ruckus FastIron Software Licensing Guide*. If the licenses are not pre-loaded on ICX 7250 units connected to a Campus Fabric domain, the devices may form 1-Gbps SPX links that must be converted to 10-Gbps SPX links using the following procedure.

Converting ICX 7150 or ICX 7250 1-Gbps SPX links to 10-Gbps links

- Most ICX 7150 devices require a PoD license for ports that will be used for 10-Gbps connections. The exception is the ICX 7150-48XP model, which is shipped with two 10-Gbps ports but requires a PoD license for any additional 10-Gbps connections. The ICX 7150 uses trust-based licenses. Refer to the *Ruckus FastIron Software Licensing Guide* for information on installing ICX 7150 licenses.

- ICX 7250 devices requires a PoD license for all ports that will be used for 10-Gbps connections. Download PoD licenses as needed. Refer to the *Ruckus FastIron Software Licensing Guide* for information on licenses and downloading them.
- Stacking must be disabled on ICX 7150 and ICX 7250 units before they can be connected as PE units.

SPX links and LAGs do not allow speed negotiation. However, an attached ICX 7150 or ICX 7250 discoverable as a PE unit is allowed to have a 1-Gbps (1000-full duplex) configuration. For the attached unit to join and operate successfully as a PE unit, the 1-Gbps link between it and an upstream device must be converted to 10-Gbps (see the example in the following figure) while the unit is still in Provisional-PE mode, before it is controlled by the CB.

FIGURE 8 ICX 7250 PE candidates for conversion to 10 Gbps

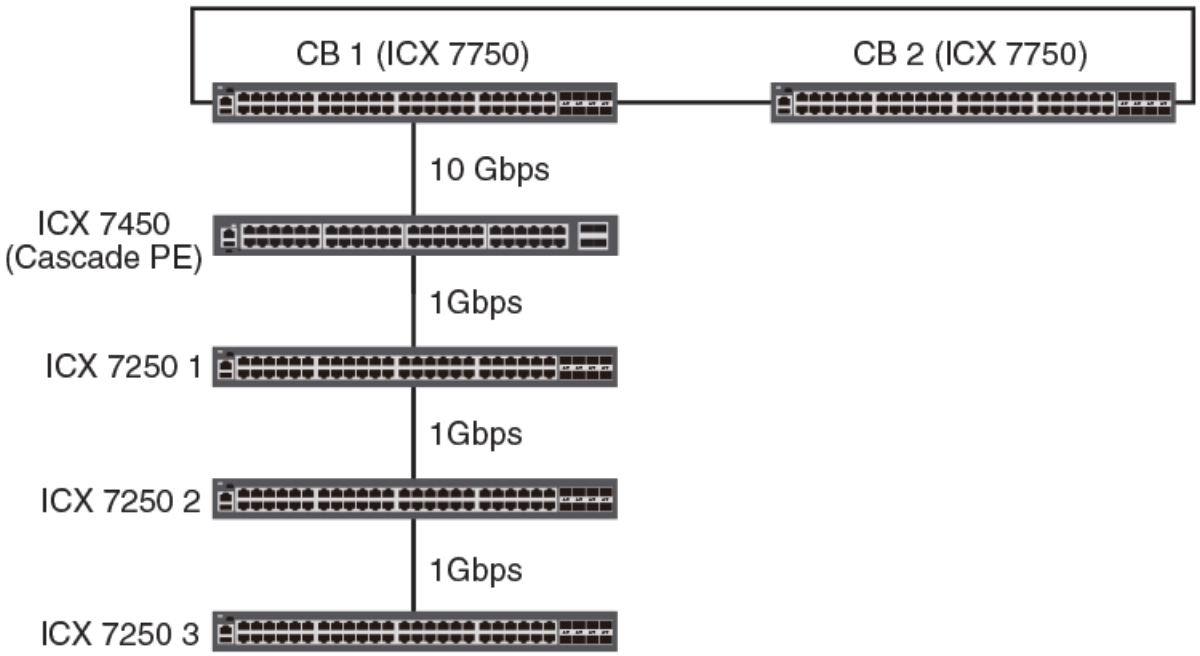

Perform these steps to convert a 1-Gbps SPX connection to a 10-Gbps SPX link or LAG between an ICX 7150 or ICX 7250 device and an active PE unit.

NOTE
The system does not allow the speed change unless the appropriate PoD license is already installed.

1. From the CB, reload the downstream ICX 7150 or ICX 7250 PE device that is connected to an upstream PE over a 1-Gbps SPX port or LAG.
2. While the downstream PE unit reloads and loses its connection to the upstream PE, remove the connecting 1-Gbps SPX port or LAG from the upstream PE.
3. When the downstream ICX 7150 or ICX 7250 unit boots up, it is not controlled by the CB but can be configured through its local console. From the local console of the new ICX 7150 or ICX 7250 unit, enter the **speed-duplex 10g-full** command and specify appropriate media to change the speed of the upstream SPX port or LAG connection from 1 Gbps to 10 Gbps.
4. Reconfigure the connecting SPX port or LAG of any additional downstream ICX 7150 or ICX 7250 devices in the same way from their local consoles, changing the 1-Gbps SPX port or LAG to a 10-Gbps SPX port or LAG connection.

Campus Fabric scalability

A Campus Fabric domain can contain from 1 to 4 CB units. Each of the CB units can support a PE chain or ring of up to 6 units. The maximum number of PE units in a Campus Fabric domain is 36. Assuming 48-port ICX 7450, ICX 7250, or ICX 7150 devices are used as PE units, 1,728 ports are supported.

Campus Fabric domain maximum configuration can be summarized as follows:

- 4 CB units
- 32 directly connected cascade ports per CB
- Maximum 8 port connections to PE chains
- Maximum 16 stand-alone PE connections
- 36 PE units per domain
- 6 PE units per chain or ring
- 1 MB maximum configuration file size

The following figure illustrates a maximized Campus Fabric domain.

FIGURE 9 Maximum units in one Campus Fabric domain

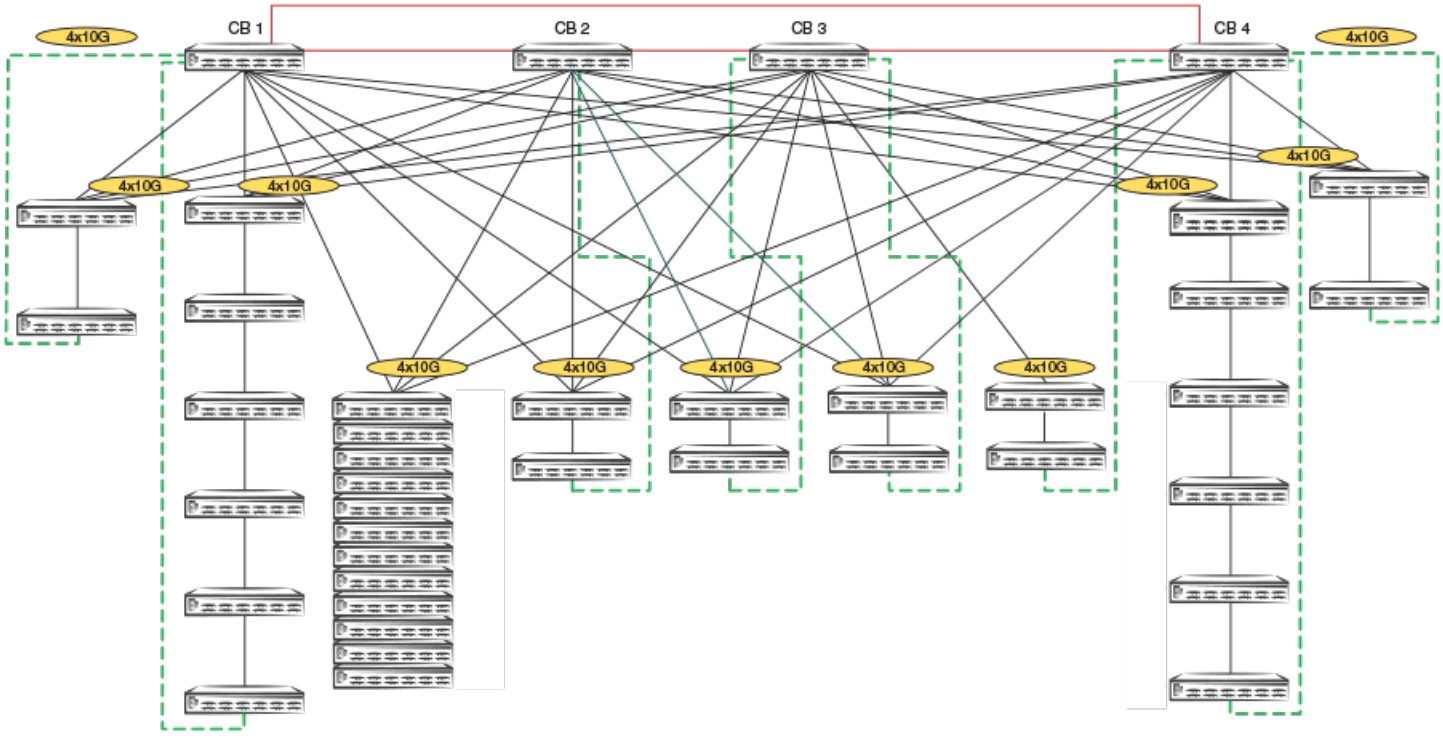

This is a fully scaled campus fabric setup with 4 CBs. All SPX connections shown are 4X10-Gbps connections. The topology includes 8 rings, which is the maximum validated scale. The rings are depicted with green dashed lines to contrast them with regular uplinks. In addition to PE rings, the topology contains 12 standalone PE units. The standalone PE units have redundant uplinks to all 4 CBs. This setup also contains two rings with the maximum cascade depth of 6 PE units.

SPX port combinations

No speed negotiation is possible when SPX links are configured. Speeds on each end of an SPX link must match. The following tables provide valid SPX port combinations.

NOTE
1-Gbps connections between CB and PE units are not supported. If you have potential PE units connected downstream over 1-Gbps links, refer to Converting ICX 7150 or ICX 7250 1-Gbps SPX links to 10-Gbps links on page 23.

TABLE 6 Valid CB-to-PE port combinations

CB port	PE port					
	40-Gbps QSFP (1x40Q module)	10-Gbps Fiber (4x10F module)	10-Gbps Copper (4x10T module)	1-Gbps Fiber (4x1F module)	1-Gbps Copper (base unit ports)	1-Gbps Fiber (base unit ports)
40-Gbps QSFP	Yes	–	–	–	–	–
10-Gbps Fiber	–	Yes	–	No	No	No
10-Gbps Copper	–	No	Yes	No	No	No

TABLE 7 Valid PE-to-PE port combinations

	PE port 2					
PE port 1	40-Gbps QSFP (1x40Q module)	10-Gbps Fiber (4x10F module)	10-Gbps Copper (4x10T module)	1-Gbps Fiber (4x1F module)	1-Gbps Copper (base unit ports)	1-Gbps Fiber (base unit ports)
40-Gbps QSFP (1x40Q module)	Yes	–	–	–	–	–
10-Gbps Fiber (4x10F module)	–	Yes	–	No	No	No
10-Gbps Copper (4x10T module)	–	–	Yes	No	No	No
1-Gbps Fiber (4x1F module)	–	No	No	Yes	No	Yes
1-Gbps Copper (base unit ports)	–	No	No	No	Yes	No
1-Gbps Fiber (base unit ports)	–	No	No	Yes	No	Yes

Control bridge considerations

Keep the following considerations in mind when configuring Campus Fabric.

- To be used in a Campus Fabric configuration, an ICX 7750 must be running a router image.
- An ICX 7750 traditional stack or a standalone ICX 7750 can be enabled as a CB.
- A traditional stack that serves as a CB stack in a Campus Fabric domain can contain no more than 4 units.
- An ICX 7750 stack that serves as the CB can be configured in the same way as any traditional stack. A separate SPX interactive-setup utility is available for configuring an SPX domain when zero-touch provisioning is not appropriate.
- To be operational, a Campus Fabric configuration requires correct CB-PE SPX port or SPX LAG configuration.
- If Spanning Tree Protocol (STP) is enabled on a CB, the CB must be reloaded for previous spanning tree configuration to be available.

For more information on maximum CB connections, refer to Campus Fabric scalability on page 25.

Port extender considerations

Keep the following points in mind when configuring PE units.

- All ICX 7150 models can be enabled as PE units.
- All ICX 7250 models except the ICX 7250-24L can be enabled as PE units.
- All ICX 7450 models, including ICX 7450-32ZP devices, can be enabled as PE units.
- In a Campus Fabric domain, no local switching occurs on the PE ports. All data and control packet processing occurs in the CB. No IP addressing is possible on the physical PE ports; however, virtual interfaces (VEs) are supported.
- Client-facing LAGs are not supported over PE virtual ports.
- Units in a stack must be disconnected, and stacking must be disabled before the units can be enabled as PEs. Likewise, if a standalone unit is enabled for stacking, stacking must be disabled before the unit can be enabled as a PE.
- Only standalone units running a router image can be enabled as PE units. Although PE units cannot run a switch image, if a TFTP server with the appropriate router image is connected to the Campus Fabric domain and a path to the image is provided, the CB will upgrade the PE image automatically. Refer to Campus Fabric (SPX) image upgrade on page 121. The converted unit can retain a stacking configuration and can later be reloaded with a switch image, if necessary.
- PE units can join a Campus Fabric domain only after at least one working SPX port or SPX LAG has been configured on both the CB and PE. Once a PE is enabled and configured, you must issue the **write memory** and **reload** commands to complete initialization.
- Each PE unit can have no more than two SPX connections, one upstream connection toward the CB and one downstream connection to another PE unit. These connections can be two SPX links, two SPX LAGs, or one SPX link and one SPX LAG. Only one SPX connection is allowed between two PE units.
- No speed negotiation is possible over an SPX connection. The speed at both ends of an SPX connection must be the same.

  NOTE
  To convert a 1-Gbps SPX link on ICX 7150 or ICX 7250 devices to a 10-Gbps SPX link, you must disable the SPX link or LAG and change speed at both ends before re-enabling the SPX link or LAG. For more information, refer to Converting ICX 7150 or ICX 7250 1-Gbps SPX links to 10-Gbps links on page 23.

- Allowable PE IDs are from 17 through 56.

  NOTE
  We do not support BUM rate-limiting on PE ports in an SPX environment.

For information on supported and unsupported topologies, refer to Campus Fabric topology overview on page 27.

For information on PE unit and PE port scaling, refer to Campus Fabric scalability on page 25.

Campus Fabric topology overview

The basic Campus Fabric topology consists of a single control bridge (CB) that operates within a core stack connected to one or more port extender (PE) units.

The CB stack consists of a maximum of 4 ICX 7750 units connected in a linear or ring topology. PE units are specially configured ICX 7450, ICX 7250, or ICX 7150 units that are connected to the CB. The PE units can be connected to each other over a single SPX port or LAG to form a PE chain or ring. The PE chain or ring can contain a combination of ICX 7150, ICX 7250, or ICX 7450 units.

In the following figure, four ICX 7750 units are configured in a ring stack form the CB. Three of the CB units are connected to PE units (SPX 17, 18, and 19).

FIGURE 10 Control bridge ring with attached PE (SPX) units

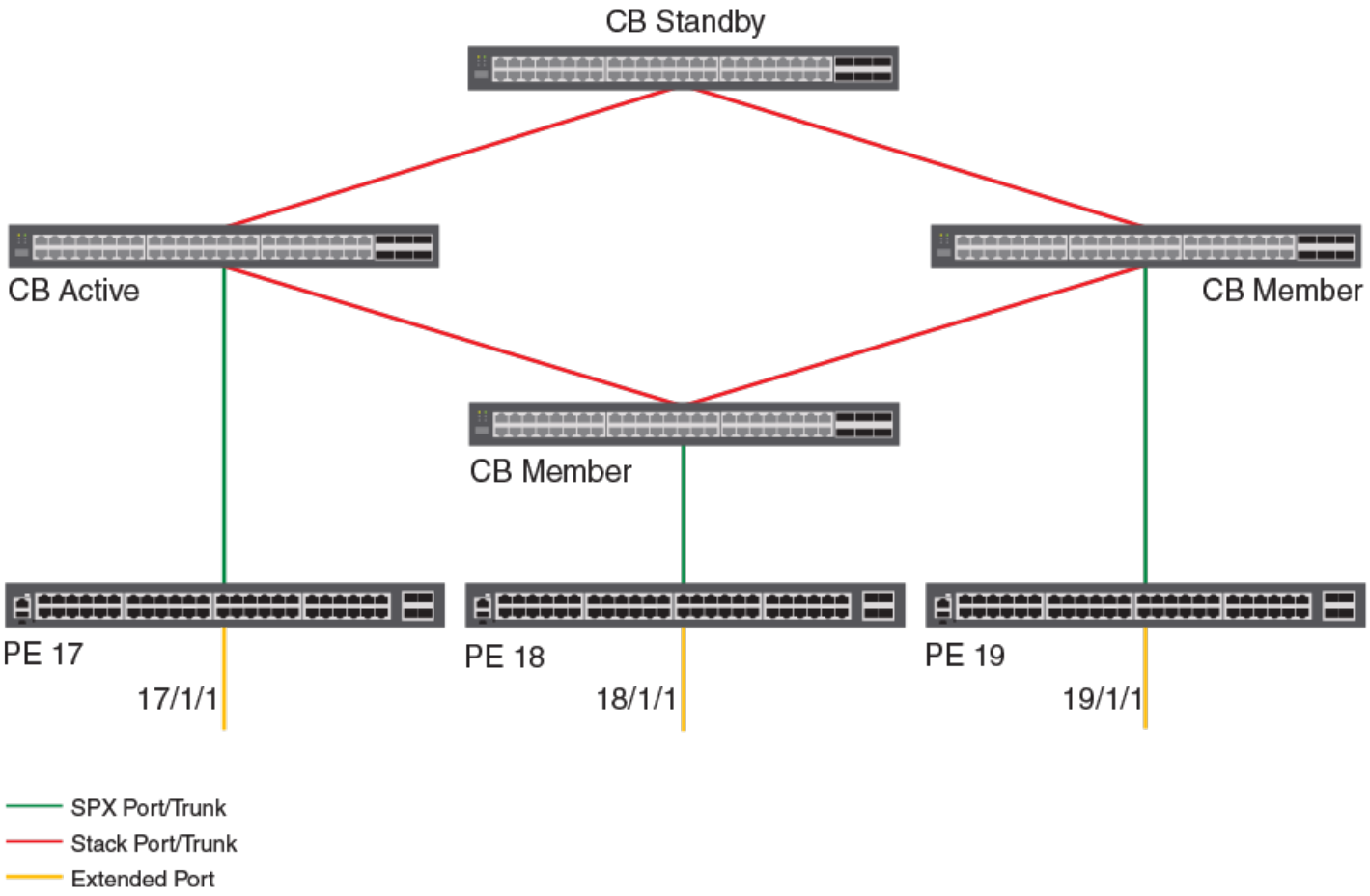

In the following figure, three of the ICX 7750 CB units are connected to PE units (labeled as SPX units). The directly connected PE units (cascade PEs) are connected to additional PE units to form an SPX chain, also referred to as a PE chain. Each SPX chain in the figure contains three PE units.

FIGURE 11 Control bridge ring with multiple PE (SPX) chains

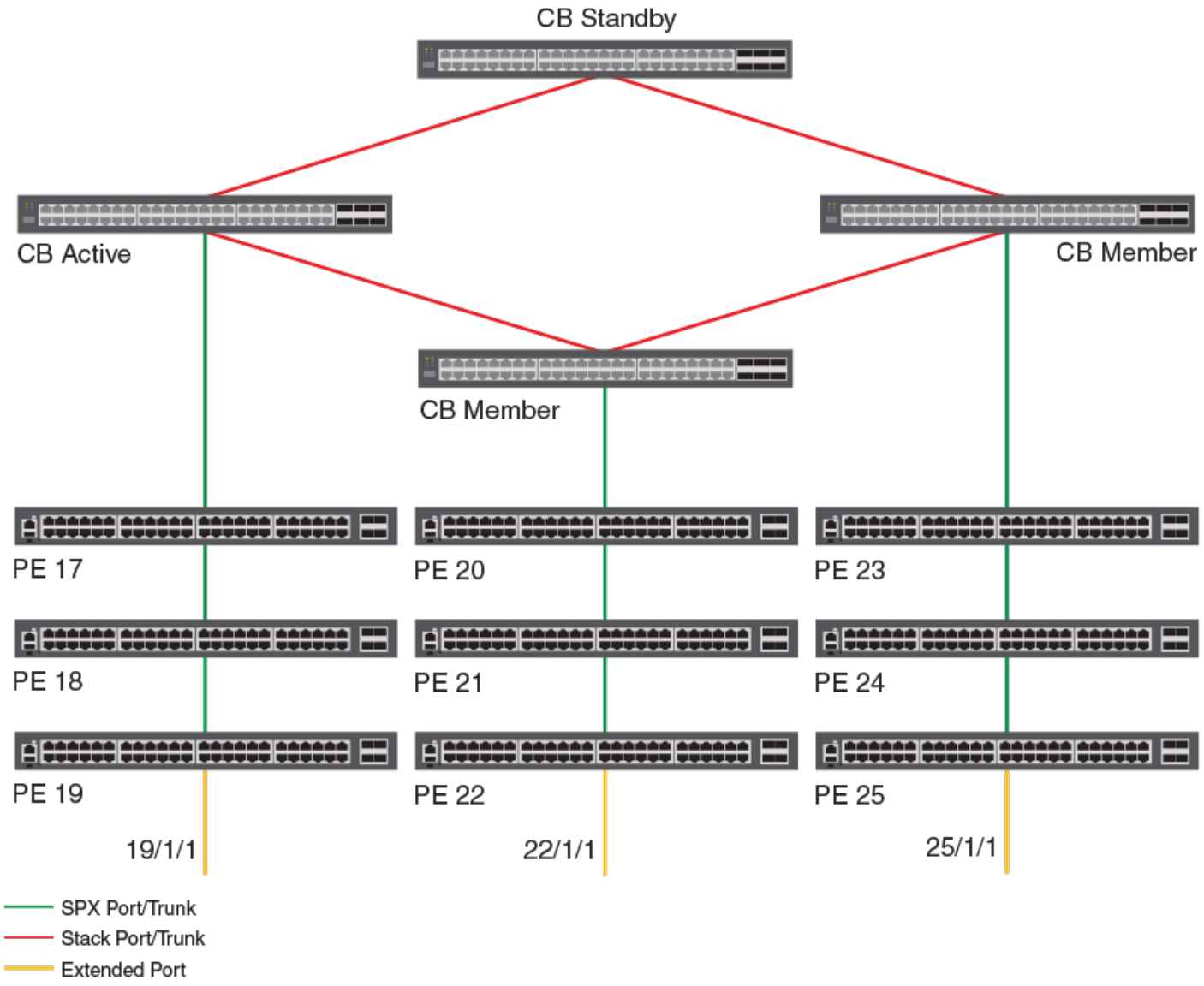

Rules governing Campus Fabric topology

A Campus Fabric domain can be discovered and automatically configured in some cases and interactively configured in other cases. Understanding the rules that apply to supported topologies will help you configure or modify the Campus Fabric domain.

> **NOTE**
> Zero-touch configuration and interactive setup are covered in Campus Fabric Configuration Overview and Interactive Configuration on page 41.

The following rules apply to supported Campus Fabric topologies:

- A PE unit can have a maximum of two SPX port or SPX LAG connections.
- CB units can have many SPX ports and LAGs.

- An SPX LAG can contain from 2 to 16 ports. Fox ICX 7750 CB units, ICX 7450 PE units, and ICX 7250 PE units, the maximum number of ports in an SPX LAG is 16 ports. For PE units that are ICX7150 devices, the maximum ports in an SPX LAG is 8 ports.
- Both ends of a link between a CB and a PE or between two PE units must be an SPX port or an SPX LAG.
- The CB must be able to reach any PE unit in a PE chain using the single SPX port or LAG. The CB must be able to reach any PE unit in a ring using either of the two SPX ports or LAGs.
- The maximum number of PE units in a chain or ring is six.
- An SPX LAG cannot link to multiple SPX ports or LAGs.
- A single PE unit cannot form a ring. An SPX LAG between the PE unit and the CB is recommended instead. If the system detects a single PE ring, one of the SPX ports or LAGs will be disabled to break the ring.

Supported CB-PE LAG topologies

One PE unit can be connected to more than one CB unit when the connection is configured as a single LAG. If one of the connected units in the CB fails, the PE unit still maintains a connection to the CB. In the following figure, SPX 17 is connected to more than one CB unit by a single LAG.

FIGURE 12 Single SPX LAG shared across multiple CB units

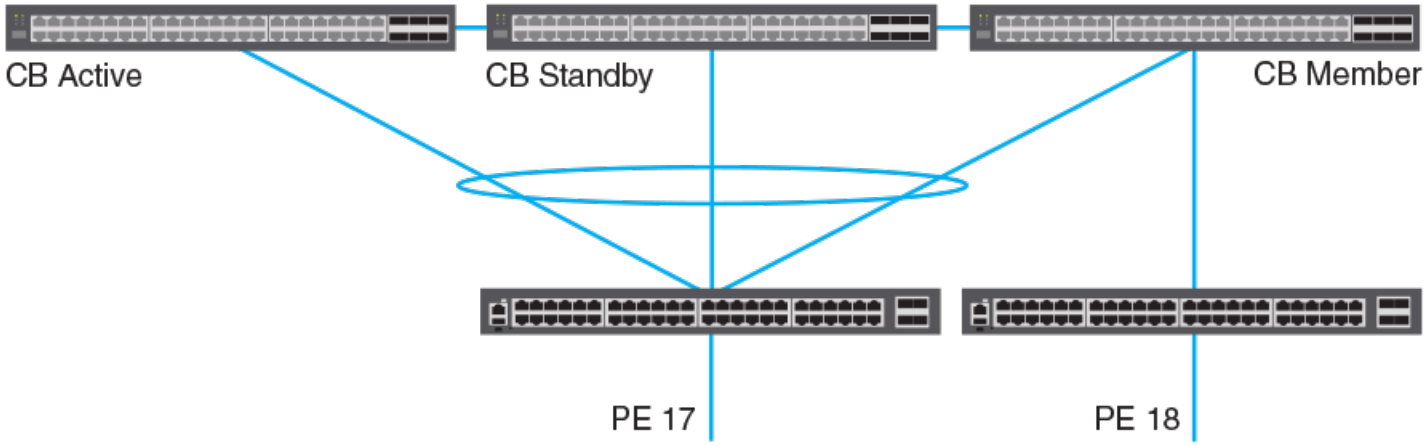

Other supported LAG topologies are shown in the following figures.

FIGURE 13 CBs with a multiple-port LAG to the same PE

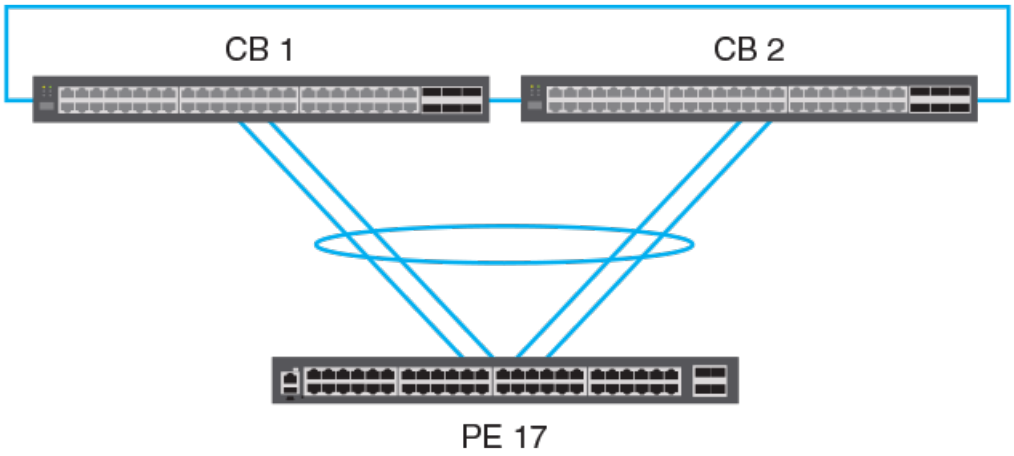

FIGURE 14 CB-PE shared LAG containing an unattached data link

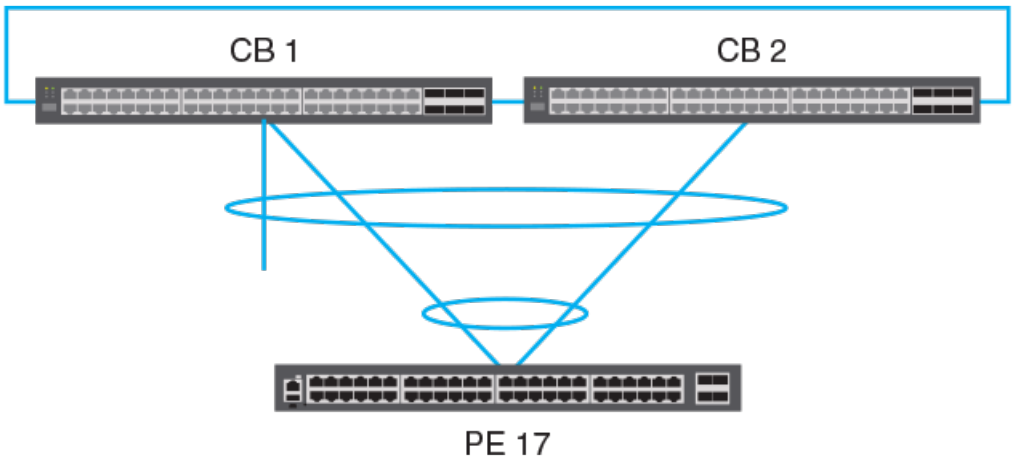

NOTE

While a non-matching SPX LAG is allowed, for example a topology that includes a three-port LAG to a two-port LAG link as shown in the previous figure, it may cause communication problems if the extra port is in the UP state. Use the **spx-lag** or **multi-spx-lag** command to correct the configuration.

FIGURE 15 CBs sharing a LAG to a cascade PE in a chain

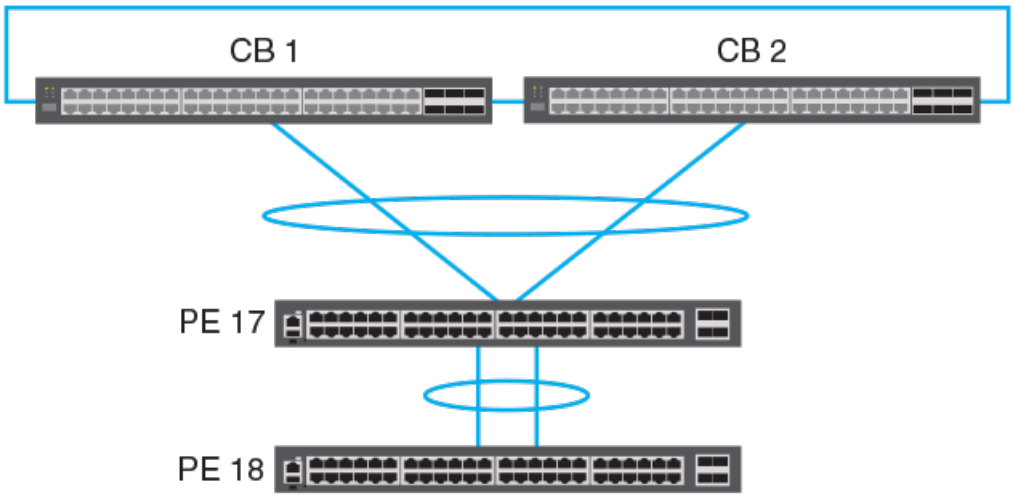

FIGURE 16 CBs sharing LAGs to both cascade PEs in two chains

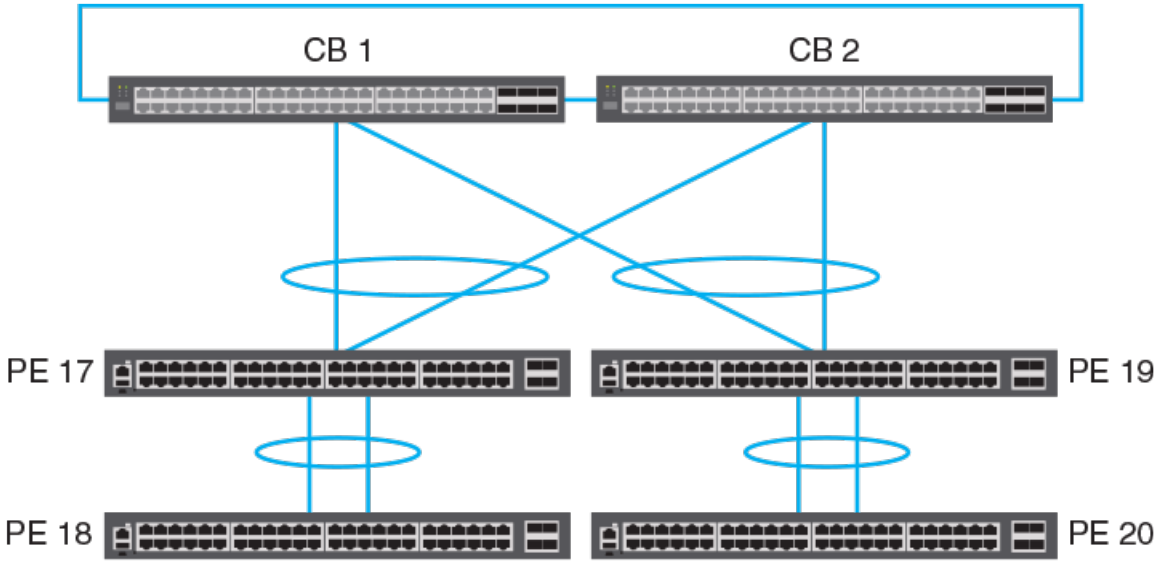

Supported PE ring topology

A redundant SPX link can be connected from a CB unit to the edge PE of an existing PE chain or between two edge PEs of two existing PE chains to form a PE ring. You can combine ICX 7150, ICX 7250, and ICX 7450 devices in a PE ring just as you can in a PE chain. The following figure represents the allowable PE ring topology. When the ring is active, traffic is generally load-balanced over the two existing SPX links.

FIGURE 17 Supported PE ring topology

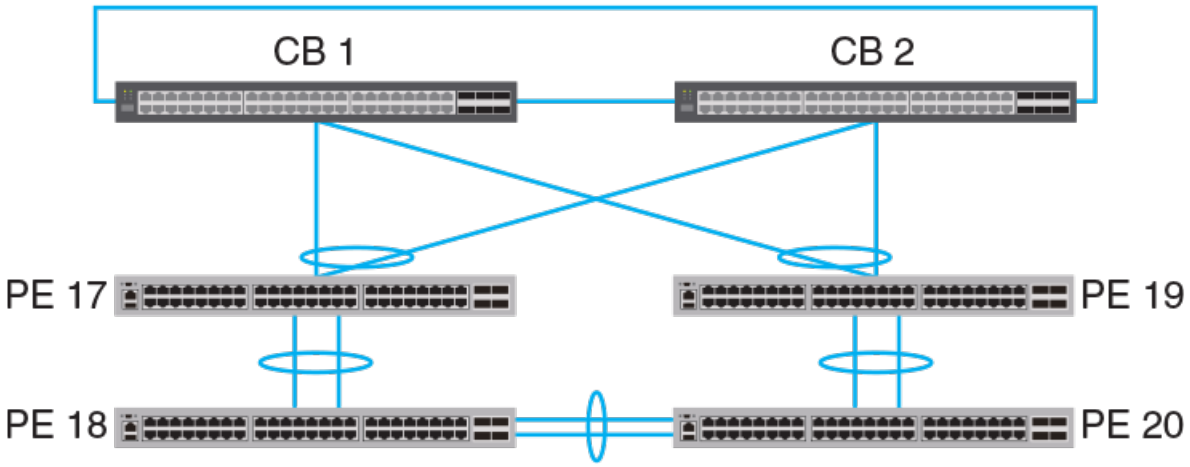

PE ring topology limitations

Consider the following points before configuring a ring topology:

- SPX links can be connected to the first (cascade) PE or the last PE in a PE chain. However, a PE ring cannot be formed by connecting an SPX link between two PEs of an existing chain.
- PE ring topology with one PE unit is not supported; a PE ring requires at least two PE units.
- PE ring topology supports a maximum of six PE units.

Traffic flow in a PE ring topology

In the following figure, the red arrow represents upstream traffic, that is, traffic originating through a PE extended port. Upstream traffic is sent to the CB for lookup and replication. The green arrow represents downstream traffic, that is, the traffic exiting through a PE extended port. The CB replicates downstream traffic on one or both of the SPX links, depending on the type of traffic.

The green 'X' between PE 18 and PE 29 illustrates the logical block in the active ring. The ring remains up, but downstream traffic is intentionally dropped at this point to prevent the traffic from traveling back to the CB through a redundant SPX link. If the ring topology changes, the logical block may also move to a new point between two other PE units.

When the ring is active, each PE unit is mapped to one of the SPX links, and any known unicast traffic that flows through the PE uses the same SPX link until the ring breaks or the ring topology changes. If the ring breaks and the mapped SPX link is no longer reachable, a PE unit is remapped to the alternate SPX link, assuming it is reachable. (Traffic is lost only until reconvergence is complete.)

For multicast or BUM traffic, each PE unit is mapped to one of the SPX links to carry upstream traffic. All traffic downstream is carried on both SPX links. This duplication avoids remapping the PE unit when the ring breaks and allows for faster reconvergence following failover.

FIGURE 18 Information flow in a PE ring

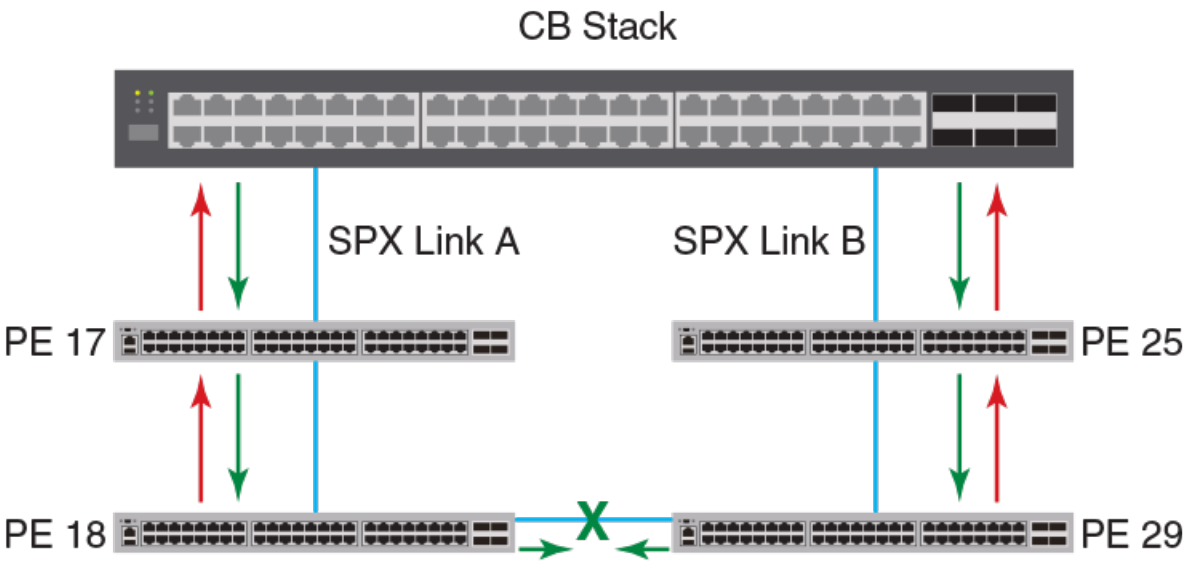

Best practices for PE ring configuration

There are two suggested methods for forming a PE ring from two PE chains. In both methods, you must form an SPX link by configuring an SPX port or SPX LAG on both ends of a connection and then physically link the cables.

The first method is to connect the edge PEs of two linear chains through an SPX link as shown in the following figure.

FIGURE 19 PE ring formed by connecting base units

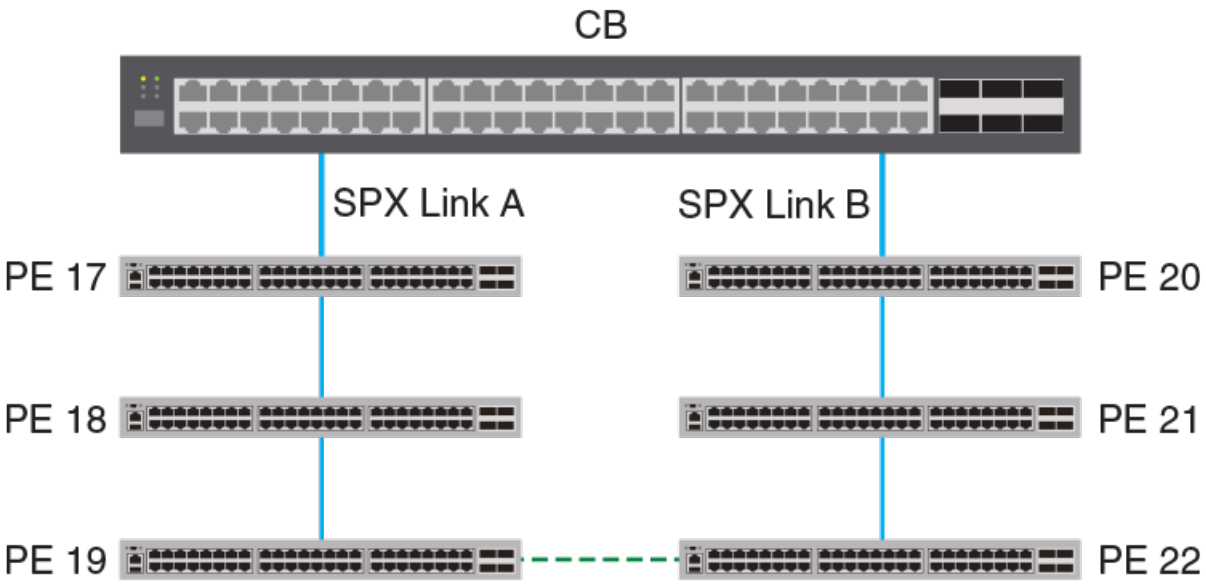

The second suggested method for creating a PE ring is to form an SPX link between the edge PE of an existing chain and the CB SPX cascade port as shown in the following figure.

FIGURE 20 PE ring formed through a CB-PE cascade port

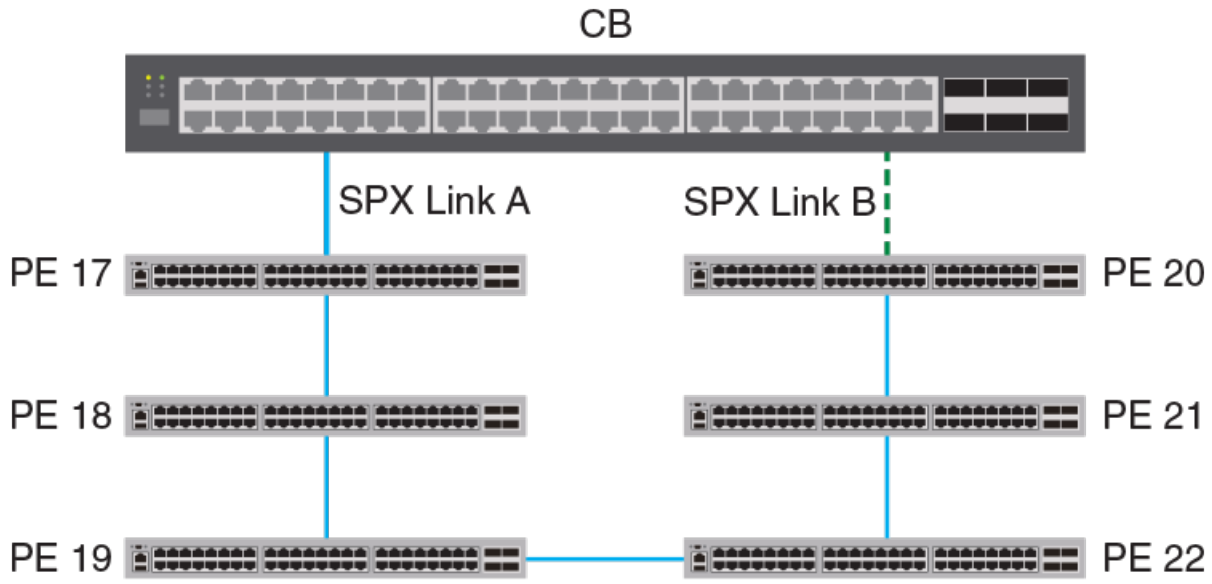

It is not necessary to configure a ring explicitly. Once you have connected the PEs to form a physical ring, the system is able to generate the correct **pe-id** configuration under **spx cb-configure**.

Once the topology learns about the PE ring, you can verify its presence with the **show spx** command. You can then check **show running-config** command output for **pe-id** configuration details for the ring (for example, pe-id CB-port 1 ID1 ID2 ... CB-port 2).

NOTE
A pe-id configuration in this format does not confirm the presence of a ring. Only the output from the **show spx** command does.

To avoid losing the configuration during a CB reboot, save it by executing the **write memory** command.

NOTE
SPX link events, PE timeouts, and PE reboots do not affect the ring topology stored in running configuration.

NOTE
For information on removing a ring, refer to Removing a PE ring and its configuration on page 111.

Topologies not supported by Campus Fabric

Campus Fabric cannot be implemented on certain topologies.

If you attempt to configure a redundant link between a CB unit and a PE unit or between two PE units in a chain, the configuration is error-disabled because the second link creates a loop. Correct the problem by adding the second link to a single SPX LAG using the **multi-spx-lag** command.

The following figures illustrate redundant link configurations.

FIGURE 21 Unsupported configuration: Redundant link between a CB and a PE

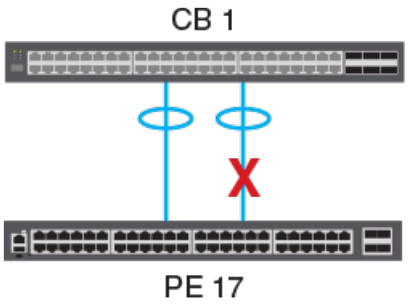

FIGURE 22 Unsupported configuration: Redundant link between two PE units

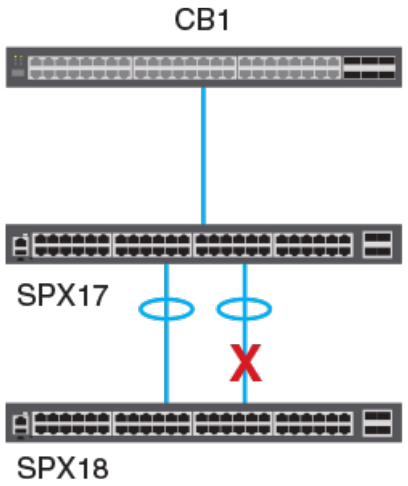

A PE unit can have only two SPX ports or LAGs. As a result, a PE unit cannot have two PE units directly attached downstream at the same level of the SPX chain. In the following figure, whichever unit, SPX 18 or SPX 19, joins first "wins" the connection. When the remaining PE candidate attempts to join, the system displays a warning message similar to this one:

```
SPX join error: Has 17/2/1 -- 18/2/3 (age=0), recv 17/2/1 -- ?/2/3, Transit PE 17 has two cscd-links
```

When this happens, remove the second unit; otherwise, a communication failure may occur.

FIGURE 23 Unsupported configuration: PE unit with two PE units attached at the same level downstream

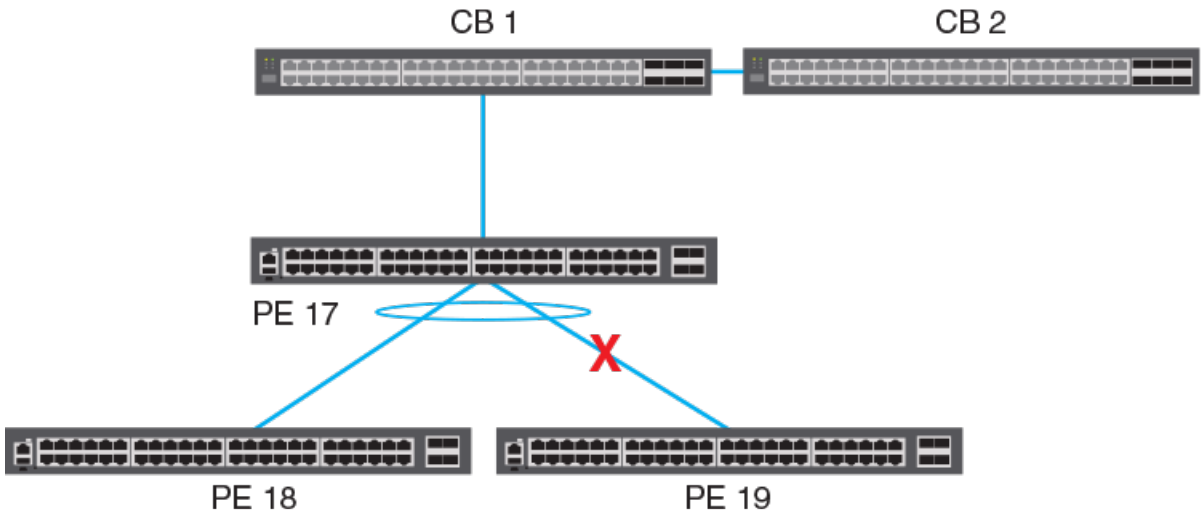

Unsupported LAG configurations

A PE unit cannot have two different LAG connections to two units in the CB stack. (That is, a single PE unit cannot form a PE ring.) LAG 2 in the following figure will be blocked (error-disabled) in a Campus Fabric implementation. A single LAG connection from the two CB units to the PE unit is supported as shown in Supported CB-PE LAG topologies on page 30.

FIGURE 24 Unsupported configuration: Two LAGs from the same PE to different CB units

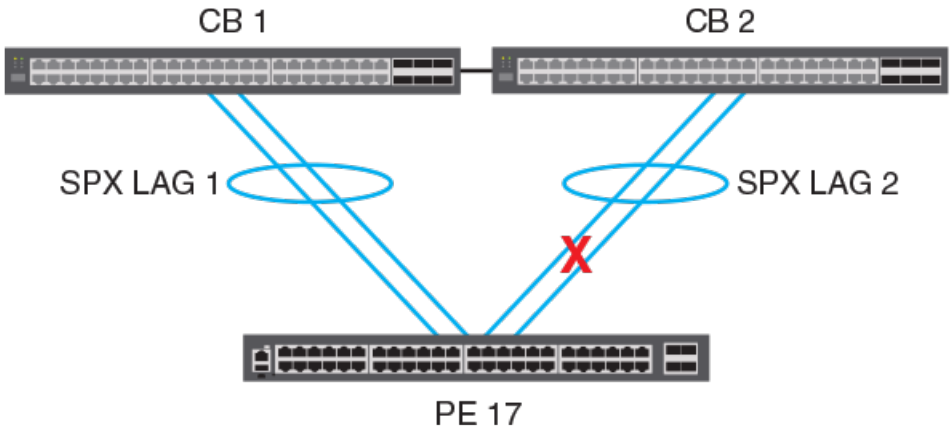

A cascade LAG cannot be configured between the CB and two different PE units. In the following figure, whichever unit, SPX 17 or SPX 18, joins first "wins" the connection. When the remaining PE candidate attempts to join, the system displays a warning message similar to this one:

```
SPX join error: both PE 17 (MAC=1234.5678.ab00) and new PE (MAC=1234.5678.cd00) link to 1/1/20: invalid
topology
```

When this happens, remove the second unit; otherwise, a communication failure may occur.

FIGURE 25 Unsupported configuration: A cascade LAG from one CB unit to two different PE units

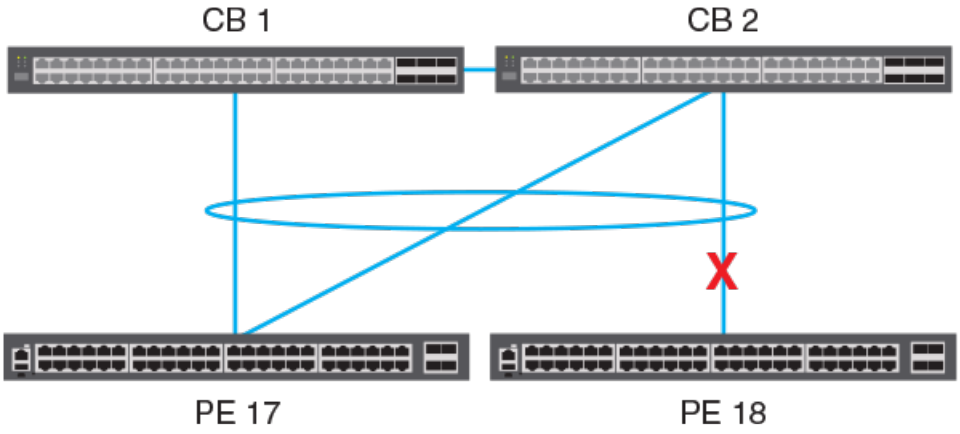

A PE unit cannot be connected to two different units through two different LAGs with overlapping members as shown in the following figure.

FIGURE 26 Unsupported configuration: PE unit with two SPX LAGs, one containing the other

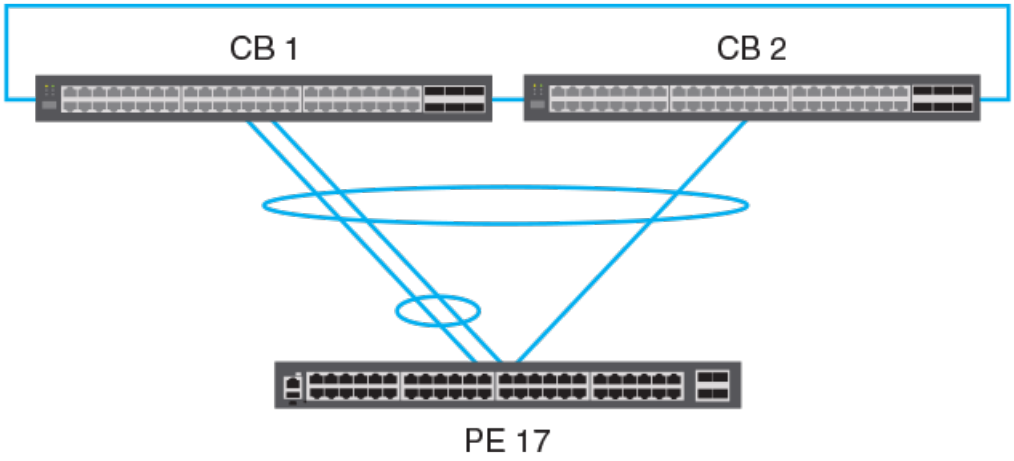

Topologies handled by zero-touch or SPX interactive-setup

ICX 7150 devices, ICX 7250 devices, ICX 7450 devices, or any combination can be discovered and automatically incorporated into an existing Campus Fabric (SPX) domain when they are present in a valid topology.

Certain topologies can be discovered and automatically configured in an SPX (Campus Fabric) domain by the zero-touch utility. These valid topologies, among others, can also be handled by the SPX interactive-setup utility, which allows the user to determine which units to include in the Campus Fabric domain and what IDs they will be assigned. In addition to the set of valid topologies, the interactive-setup utility handles a broad range of topologies that can be modified by user selections to become valid.

In a valid topology, all discovered units and links can join an existing Campus Fabric domain to form a supported Campus Fabric topology. All new links can be formed automatically into a chain or ring with the zero-touch utility.

For a group of connected new units to be detected by the Campus Fabric domain, the following conditions must be met:

- The new units must be clean units connected through non-base module ports (that is, through modules 2, 3, or 4).
- At least one new unit must have a non-base module port linking to the Campus Fabric domain through SPX probe ports.

SPX probe ports may be any of the following:

- Configured **zero-touch-ports** (configured as described in Using zero-touch to add PE units on page 54)
- CB SPX ports or SPX LAGs that are not live and that are not attached to existing PE units
- A downstream SPX port or SPX LAG on an edge PE unit (including those formed from either base-module or non-base-module ports)
- All non-base module ports of an edge PE.

SPX probes for new units cannot be sent over the following ports:

- Live SPX ports or SPX LAGs (whether the live ports are on a CB or PE unit)
- Any port that contains configuration.

The following figure depicts valid topologies that can be handled by the zero-touch utility.

FIGURE 27 Examples of valid topologies

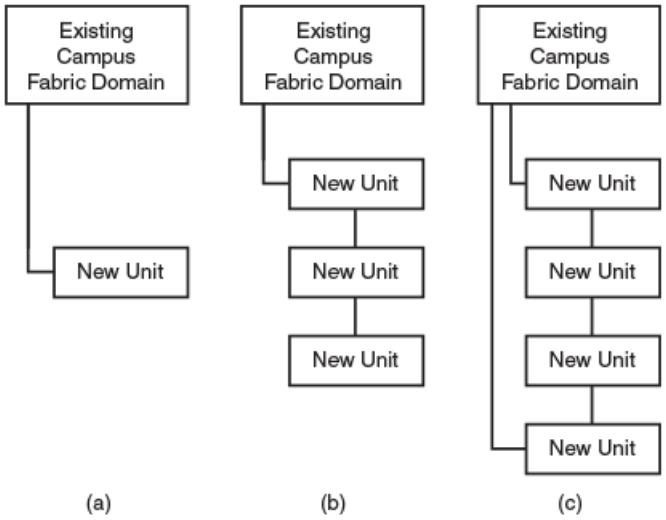

NOTE
Figures that depict topology do not necessarily show the maximum number of discoverable PE units in a chain. Up to six potential PE units can be configured in a chain or ring topology.

NOTE
Multiple links are not depicted in the previous figure but may be part of valid topologies. When the system detects multiple links between two units, it generates a LAG containing all the links, assuming they are running at the same speed. For more information on LAG splits and merges in Campus Fabric zero-touch and interactive-setup, refer to SPX LAG splits and merges on page 48.

NOTE
At times, you may want to protect stand-alone devices from being discovered by Campus Fabric configuration utilities, to prevent them from becoming part of the Campus Fabric domain. For more information, refer to Protecting a unit from being discovered on page 44.

Campus Fabric Configuration Overview and Interactive Configuration

- Campus Fabric configuration overview..... 41
- Protecting a unit from being discovered..... 44
- Zero-touch and SPX interactive-setup topology requirements..... 45
- Zero-touch and SPX interactive-setup deployment considerations..... 51
- Zero-touch configuration..... 53
- SPX interactive-setup..... 58

Campus Fabric configuration overview

Before building a Campus Fabric domain, become familiar with related considerations and constraints. Refer to Planning Considerations for a Campus Fabric Domain on page 23 for more information.

To configure a Campus Fabric domain, the following steps must be completed.

1. Configure and connect two to four ICX 7750 devices in a traditional stack, or configure a standalone ICX 7750.

   NOTE
   Configuring two or more ICX 7750 devices in a stack provides redundancy for the control bridge (CB).

2. Enable and configure the ICX 7750 stack or ICX 7750 standalone device as a CB.
3. Connect ICX 7450, ICX 7250, or ICX 7150 devices to the CB.
4. If you elect to do manual configuration, a fourth step is needed:

   Enable and configure the ICX 7450, ICX 7250, or ICX 7150 devices as PE units.

   NOTE
   No matter which configuration method you use, when a PE unit joins the Campus Fabric domain, user data ports don't immediately come up. They are brought up within one minute after all attached PE units have joined in order to avoid interference with the join activity.

   NOTE
   To configure a PE manually, the PE candidate must be running a router image because **spx pe-enable** configuration is not available in the switch image.

   NOTE
   A PE candidate running a switch image can be discovered and added to the Campus Fabric Domain by the zero-touch or the SPX interactive-setup utility; however, because Campus Fabric requires a router image, the new device will initially be in a non-operational state due to an image mismatch. If **tftp-server** is configured and **image-auto-copy** is not disabled, the CB will download a router image to a non-operational PE unit. The PE reloads, joins the Campus Fabric domain, and becomes operational.

NOTE
From release 08.0.70, SPX interactive-setup and zero-touch provisioning download images to new units before converting them to PEs if the PEs have different software images. The **tftp-server** command must be configured for image download.

SPX interactive-setup

SPX interactive-setup is the recommended method for Campus Fabric configuration. SPX interactive-setup is a tool that can be used even in more complex deployments to convert PE candidates in router or switch mode to PE units. The tool allows you to select PE IDs and configure SPX ports and LAGs. SPX interactive-setup recognizes some invalid SPX topologies that cannot be handled by zero-touch deployment and requests user input to convert them to valid topologies. SPX interactive-setup also allows you to change PE IDs interactively without detaching cables or shutting down units.

Zero-touch deployment

Zero-touch deployment converts clean PE candidates in router or switch mode to active PE units without user intervention. In supported topologies, zero-touch detects potential PE units, assigns them IDs, defines SPX ports or LAGs, and reloads them as PE units.

Manual configuration

In some situations, you may choose to configure the Campus Fabric domain manually. For example, in manual configuration, there is no requirement that configured ports be non-base module ports. Manual configuration is recommended if connecting candidate PE units involves LAGs or loops. Multiple links between two candidate PEs cause packet looping. You can use manual configuration to create an SPX LAG for multiple links before physically connecting links. A LAG consisting of multiple links is considered a logical link and does not cause packet looping.

For more information on the steps and system processes involved, refer to Campus Fabric Manual Configuration on page 73.

Differences in Campus Fabric configuration practices

The commands used in Campus Fabric configuration differ from most FastIron commands. You should become familiar with syntax changes. For example, port ranges are handled differently. Configuring ports and trunks also differs in Campus Fabric configuration.

Basic syntax change in SPX port configuration

SPX ports, like stacking ports, do not use the **ethernet** keyword as part of port configuration. SPX port configuration relies on three-tuple notation as it is used on all current FastIron devices; however, port lists and ranges are used differently.

The **ethernet** keyword continues to be used for configuring ports on standalone devices.

Using port lists to specify SPX ports and port ranges

Campus Fabric configuration introduces a flexible format for representing multiple ports and port ranges in command entry. Valid port lists include any combination of "x/y/z" and "x/y/z to x/y/z" notation. The following examples are all valid port lists in an SPX command:

- 1/2/3 (a single port on CB unit 1)

- 1/2/1 1/2/2 1/1/48 (three separate ports on CB unit 1, which do not have to be presented in ascending order)
- 1/1/40 2/1/1 to 2/1/10 (a single port on CB unit 1, followed by a range of 10 ports on CB unit 2, module 1)
- 2/1/10 to 2/1/15 1/1/30 to 1/1/31 (a range of five ports on CB unit 2, module 1 and a range of two ports on CB unit 1)

Differences between SPX LAGs and stacking trunks

In stacking, the secure-setup utility for configuring a stack relies on the presence of two default ports on every stackable unit. The default ports are stacking candidates. The secure-setup utility can send probe packets through these ports even when they are not configured as stacking ports. Some stackable devices allow you to reconfigure stacking ports or trunks to non-factory settings by first changing the default ports. Even when a user configures only one stacking port or trunk, a stacking unit still requires two default ports.

A stacking trunk cannot be configured unless an underlying stacking port already exists. For example, the command **stack-trunk** *1/2/1* **to** *1/2/3* is only valid when **stack-port** *1/2/1* is in place.

Campus Fabric configuration does not use the same secure-setup utility as stacking. The two stacking default ports are not present or required. You can change SPX ports and LAGs on a PE unit without initially defining default ports. Furthermore, an SPX LAG does not require you to first configure a lead stacking port.

SPX LAG (trunk) notation differs from stacking trunk notation in a few fundamental ways:

- Although a stacking trunk requires contiguous ports in the format "x/y/z to x/y/z", an SPX LAG allows noncontiguous ports, with any combination of "x/y/z" and "x/y/z to x/y/z" port notation.
- Stacking trunks contain a range of ports on a single stacking unit on each end. In contrast, ports in a CB SPX LAG can span multiple CB units. (SPX LAGs on PEs must contain ports from only one PE unit, but the ports do not have to be contiguous.)
- The SPX LAG and port commands **spx-lag** and **spx-port** are mutually exclusive in their membership.

Port and LAG reconfiguration based on dynamic entries

Campus Fabric configuration allows dynamic reconfiguration of ports and LAGs in some cases.

> **NOTE**
> The same rules apply when configuring SPX ports or LAGs on a live system. Configuring ports on a live system may in some cases be less disruptive. Refer to Configuring SPX ports and LAGs on a live system on page 120 for more information.

The following rules govern SPX port and LAG creation:

- If a new SPX port or LAG has any common member with an existing SPX port or LAG, the new entry replaces the existing configuration.
- If a new SPX LAG has common members with multiple SPX port or LAG configurations, an error is returned, and the new configuration is blocked.
- If a new SPX port or LAG does not overlap with existing SPX ports or LAGs, it is added.

The following example creates a LAG with three ports on PE unit 17.

```
ICX7750-26Q Router(config-spx-unit-17)# spx-lag 17/2/2 to 17/2/4
```

The same LAG is changed to a two-port LAG using the following command.

```
ICX7750-26Q Router(config-spx-unit-17)# spx-lag 17/2/2 to 17/2/3
```

The following example configures a single PE port.

```
ICX7750-26Q Router(config-spx-unit-18)# spx-port 18/1/3
```

The same port is reconfigured as part of a LAG using the following command.

```
ICX7750-26Q Router(config-spx-unit-18)# spx-lag 18/1/1 to 18/1/4
```

The following example configures a port and a LAG on PE unit 19.

```
ICX7750-26Q Router(config-spx-unit-19)# spx-port 19/2/1
ICX7750-26Q Router(config-spx-unit-19)# spx-lag 19/2/3 to 19/2/4
```

With the previous configuration in place, the following entry returns an error.

```
ICX7750-26Q Router(config-spx-unit-19)# spx-lag 19/2/1 to 19/2/3
```

Notice that the new entry requires changes to two existing configurations, a port and a LAG. As a result, the new LAG is blocked.

Protecting a unit from being discovered

The **spx zero-touch-deny** command can be configured on a traditional stack member or standalone device that is connected to non-SPX ports to prevent the device from being converted to a PE unit accidentally.

Follow these steps to prevent an ICX 7150, ICX 7250, or ICX 7450 device from being discovered and converted by the zero-touch or interactive-setup utility.

> **NOTE**
> Use the **no** form of the command to again make the device available for zero-touch configuration or interactive-setup. The **zero-touch-enable** or the **spx pe-enable** command also removes the **spx zero-touch-deny** setting when entered on the device.

1. Enter global configuration mode.

   ```
   device# configure terminal
   ```

2. Enter the **spx zero-touch-deny** command.

   ```
   device(config)# spx zero-touch-deny
   ```

The following example protects an ICX 7450 from being discovered by a CB unit when the zero-touch utility or SPX interactive-setup utility is run.

```
ICX7450-48F Router>
ICX7450-48F Router> enable
No password has been assigned yet...
ICX7450-48F Router# configure terminal
ICX7450-48F Router(config)# spx zero-touch-deny
ICX7450-48F Router(config)#show running-config
Current configuration:
!
ver 08.0.50b1T213
!
stack unit 1
  module 1 icx7450-48f-sf-port-management-module
  module 2 icx7400-xgf-4port-40g-module
  module 4 icx7400-qsfp-1port-40g-module
!
spx zero-touch-deny
!
!
```

Zero-touch and SPX interactive-setup topology requirements

A Campus Fabric system can discover and automatically configure PE units connected in certain topologies.

The zero-touch and SPX interactive-setup utilities can detect potential SPX connections when clean candidate PE units are connected by non-base module ports (on modules 2, 3, or 4), either directly to the Campus Fabric domain or via other candidate PEs. CB units can be connected to PE candidates through base module or non-base module ports.

From release 08.0.70, zero-touch and SPX interactive-setup are enhanced in the following ways:

- Zero-touch and SPX interactive-setup interoperate with future releases. For example, a CB running release 08.0.80 can detect standalone units running release 08.0.70 and vice versa. However, releases prior to 08.0.70 are not detected and cannot interoperate with newer releases.
- As long as **tftp-server** configuration provides correct image location, images can be copied to new units before they are reloaded as PEs so that the PEs run the same image as the CB.
- New links can be detected between a CB and an edge PE or between two edge PEs. Detected links are used to convert one or two PE chains to a ring (in this case, the last PE in a chain is an edge PE). Converting new units to PEs and converting PE chains to rings are fully integrated into a single zero-touch SPX interactive-setup process.

  NOTE
  It is recommended that you make all physical connections before running SPX interactive-setup or zero-touch so that all new units and connections can be detected and processed. Multiple links between two units become one SPX LAG.

  NOTE
  SPX interactive-setup and zero-touch do not detect new links between PEs in the same chain or ring. Once a new unit becomes a PE, new links are not detected, unless the links are on an edge PE.

Valid and invalid topologies for zero-touch and SPX interactive-setup utilities are described in Campus Fabric topology overview on page 27. The utility handles only valid topologies. When the zero-touch utility can detect an invalid topology, it issues a warning.

The SPX interactive-setup utility handles valid topologies and allows user intervention to select desired units or change PE IDs. The interactive-setup utility also handles many invalid topologies when users can select units to create a valid topology. Where possible, interactive-setup presents the discovered topology for user selection. When the system detects a topology it cannot present, it generates a warning.

NOTE
The manual Campus Fabric configuration process does not require non-base module ports. Manual configuration is recommended if connecting candidate PE units involves LAGs or loops. Multiple links between two candidate PEs cause packet looping. You can use manual configuration to create an SPX LAG for multiple links before physically connecting links. A LAG consisting of multiple links is considered a logical link and does not cause packet looping.

Zero-touch and SPX interactive-setup for PE units with live traffic

Zero-touch and SPX interactive-setup have enhancements to harden the discovery process as of FastIron release 8.0.61. Previously, if live clients were connected to switches waiting to be converted to PE units, there was a chance of loops. Now, loop packets are dropped until discovery is complete. This greatly enhances the reliability of discovering all PE candidates and links under severe situations. The loops are removed after zero-touch or SPX interactive-setup changes multiple inter-switch links between two units into a LAG.

If your system has no live traffic, you can connect new units the way you want without being concerned about creating loops. If your system has clients carrying live traffic, there are going to be temporary loops. As long as you allow zero-touch or SPX interactive-setup to discover all units and links, and change discovered units to PEs to generate appropriate running-configuration, the loops are handled and should resolve automatically.

Invalid topologies that can be handled by SPX interactive-setup

The following figure depicts some invalid topologies that can be handled by SPX interactive-setup. These topologies include new units that form a chain or ring of up to six units and that have one or two uplinks to the existing Campus Fabric domain.

FIGURE 28 Invalid topologies handled by SPX interactive-setup

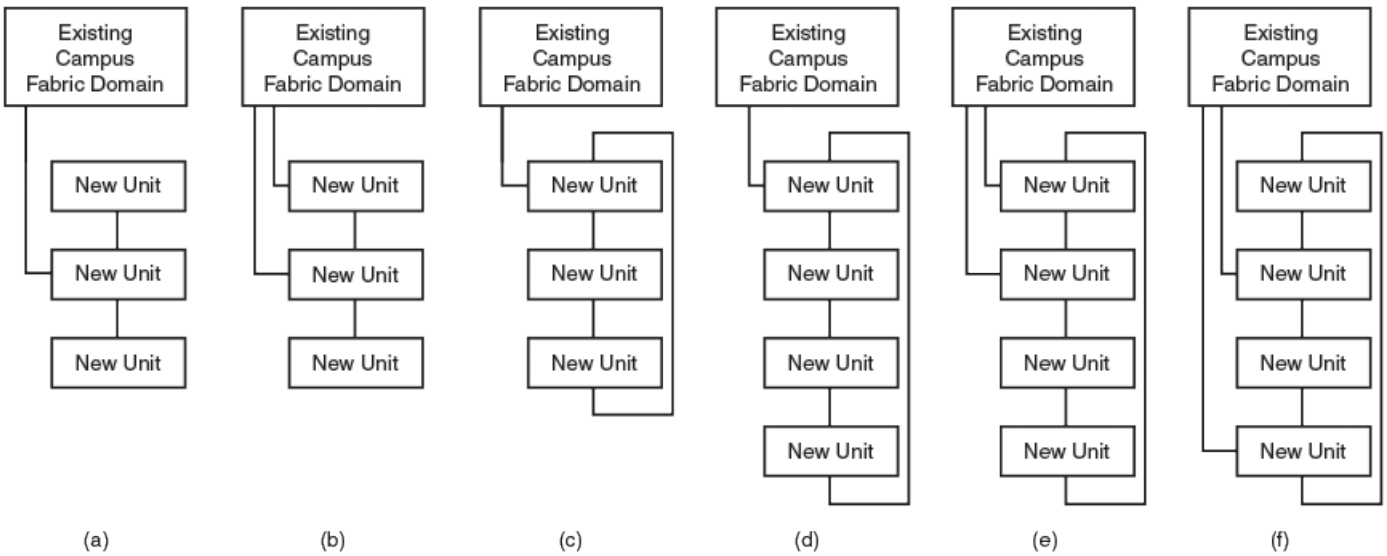

Special cases where a link can be removed to select all new units

You can select units to include in a Campus Fabric domain as part of SPX interactive-setup. When you select units, all their interconnections are selected as SPX ports or SPX LAGs. To prevent you from creating an invalid Campus Fabric topology, the interactive-setup utility does not generally allow you to remove links. In certain cases, however, you are allowed to remove a link to present all potential units in a valid topology.

- Case 1—A ring of new units has one uplink to the CB or to another PE unit.
- Case 2—A ring of new units has two uplinks to the CB or other PE units, and the two uplinks are on two new neighbor units.

Case 1. The following example shows a ring of potential units connected through a single uplink to the Campus Fabric domain.

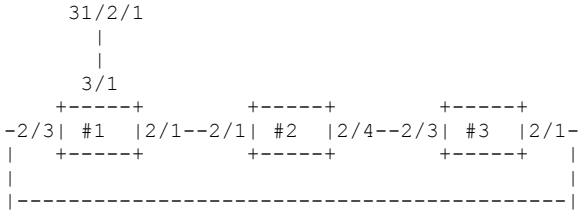

FIGURE 29 Case 1: Ring of potential PEs with one direct connection to the CB



To form a valid topology, the user has the option to remove the link between units 1 and 2 or the link between units 1 and 3.

FIGURE 30 Case 1: Resolution



Case 2. The following example shows a ring of new units with two uplinks through neighboring units 1 and 2.

```
     1/1/10           21/2/1
        |               ||
        |               ||
      3/1             3/1
     +-----+         +-----+         +-----+         +-----+
-2/3| #1  |2/1--2/1| #2  |2/4--2/3| #3  |2/1--2/3| #4  |2/1-
|    +-----+         +-----+         +-----+         +-----+    |
|                                                               |
|---------------------------------------------------------------|
```

FIGURE 31 Case 2: Ring with two connections to the CB through neighboring units

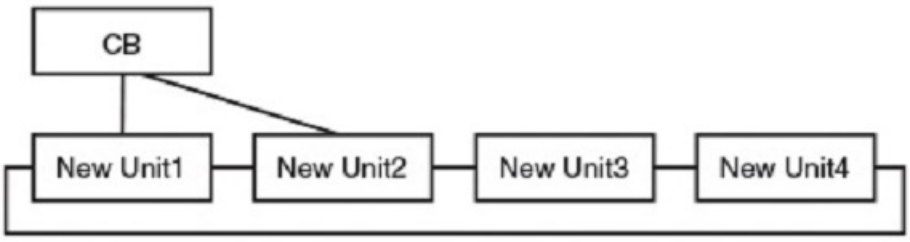

The user has the option to remove the link between units 1 and 2 to form a valid topology.

FIGURE 32 Case 2: Resolution

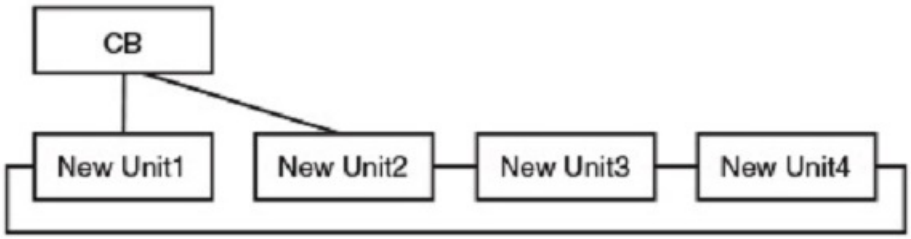

SPX LAG splits and merges

Both the zero-touch utility and the SPX interactive-setup utility can split or merge CB and PE SPX ports and LAGs to match discovered new topology. When SPX LAGs split or merge, some ports are disabled. The zero-touch and SPX interactive-setup utilities re-enable ports that become SPX ports and SPX LAGs. Ports that become data ports remain disabled.

NOTE

Data ports can be re-enabled at the interface configuration level using the **no disable** command. For example:

```
device# configure terminal
device(config)# interface 17/2/1
device(config-17/2/1)# no disable
```

Ports of different speeds

All ports in a LAG must have the same speed. When the zero-touch utility or the interactive-setup utility encounters ports with different speeds, it assigns them to different SPX ports or LAGs.

Here are some examples of how the system forms SPX connections from ports running at different speeds.

FIGURE 33 Single PE with multiple 40-Gbps links and one 10-Gbps link

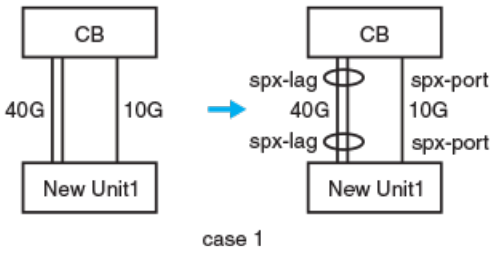

In the previous example, a ring of only one PE is formed because all links are classified in two directions due to their different speeds. Because a single PE ring is an invalid topology, the system prints and logs a warning message. The new unit is not converted to a PE.

FIGURE 34 New PE chain with multiple 40-Gbps links and single 10-Gbps link

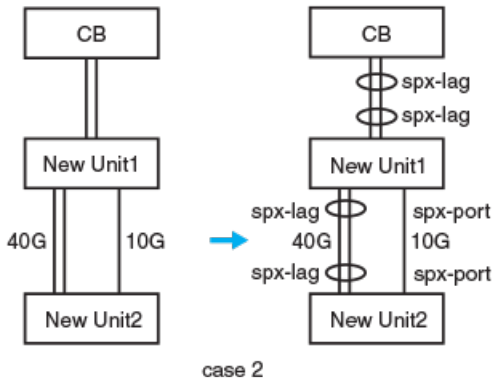

The previous figure forms an invalid topology. The zero-touch utility issues a warning when the topology is formed. The SPX interactive utility allows you to remove the 10-Gbps links or the 40-Gbps links. The two new units form a ring with one uplink. This is an example of Case 1 in Special cases where a link can be removed to select all new units on page 46.

Detecting new links and converting PE chains to rings

From release 08.0.70, SPX interactive-setup and zero-touch provisioning can detect links between a CB unit and an edge PE or between two edge PE units. When these links are detected, the associated PE chain or, if present, both associated PE chains are converted into a ring.

NOTE
SPX interactive-setup and zero-touch provisioning do not detect new links between existing PEs in the same chain or ring. As a result, neither utility can expand an existing SPX LAG. Use the **multi-spx-lag** command to change SPX LAGs on a live link.

NOTE
To form an SPX LAG between two PE chains, connect multiple links between two units before running SPX interactive-setup or before enabling zero-touch provisioning. Either utility detects all links and generates an SPX LAG containing the ports. Once a chain is converted to a ring, neither SPX interactive-setup or zero-touch provisioning can detect any new link between units of a PE chain or ring.

The capability to convert one or two PE chains to a ring is fully integrated into both SPX interactive-setup and zero-touch provisioning. Both utilities can discover new units and/or convert PE chains in a single process. If SPX interactive-setup detects both possibilities, the interactive process handles PE chain-to-ring conversion before handling new units.

When SPX interactive-setup or zero-touch provisioning detects links between an CB and an edge PE or between two edge PEs and converts PE chains to a ring, the system generates any needed SPX port or SPX LAG configuration for the ring. No reload is required; however, you should execute the **write memory** command to save the new SPX port or SPX LAG configuration.

A link can be detected only when at least one end sends probes. The following ports transmit probe packets:

1. CB SPX ports and CB SPX LAGs that have no live PE link
2. CB ports configured as zero-touch ports
3. Edge PE ports on non-base modules 2, 3, or 4, excluding upstream SPX ports or SPX LAGs and any ports with configuration. In this case, an edge PE port is always the last unit of a chain.

As an example, if a base-module port on an edge PE connects to a CB zero-touch port, the link can be detected because, although PE base-module ports do not send probes, the CB zero-touch port at the other end of the link does.

If a link connects to a CB port, the port must be an SPX port, part of an SPX LAG, or a zero-touch port. Otherwise, the system prints a warning message to remove the link. A PE port detected on the link can be any port as long as it does not have configuration.

All links between two units are assigned to a single SPX LAG. You should complete all physical connections before running SPX interactive-setup or enabling zero-touch provisioning because once one or two PE chains form a ring, the ring can no longer send the probes used by the two utilities to detect new units or links.

The following figure shows the two general ways that PE chains are converted to rings. A dashed line indicates a new link, which may consist of one or multiple physical links.

FIGURE 35 Two types of automatic PE chain-to-ring conversion

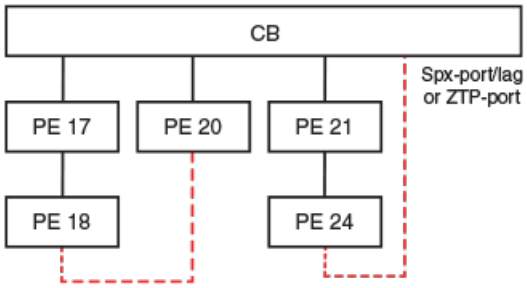

Invalid PE rings

The SPX system runs many sanity checks to confirm that the connections are valid. When an invalid connection is discovered, the system prints a warning message that describes the invalid connection and requests that the connection be removed.

The following figure illustrates several invalid connections that cannot form a PE ring.

FIGURE 36 Invalid PE configurations that cannot automatically form rings

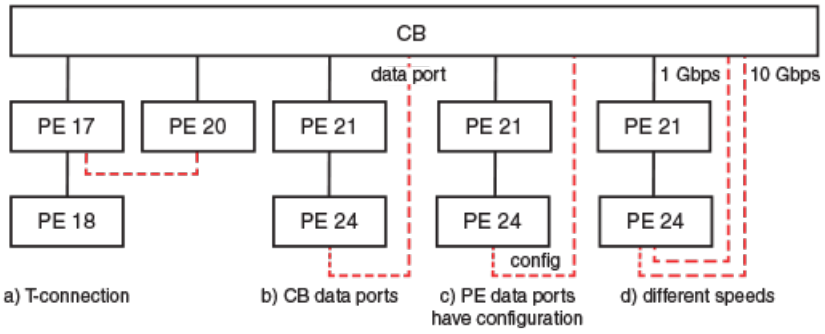

Label	Reason PE ring cannot be formed
a	T-connections are invalid.
b	The CB port is not an SPX port, SPX LAG member, or zero-touch-port.
c	The PE data port has configuration.
d	Links of different speeds cannot be automatically merged into an SPX LAG.

Zero-touch and SPX interactive-setup deployment considerations

SPX interactive-setup is a superset of zero-touch provisioning. Both Campus Fabric provisioning methods use the same discovery procedures, algorithms, and configured probing ports. In fact, zero-touch provisioning generates the same results that SPX interactive-setup would if you accepted all default values presented by pressing **Enter** or **Y** when prompted.

Ruckus recommends SPX interactive-setup over zero-touch provisioning for the following reasons:

- SPX interactive-setup triggers a topology discovery as soon as you launch the utility. In contrast, zero-touch does topology discovery every 6 minutes in background (although zero-touch discovery is triggered within one minute when the probing ports first become active).

  NOTE
  You should connect all physical links before running SPX interactive-setup or enabling zero-touch provisioning so that all new units and links are discovered in one process. Furthermore, although you have control over when SPX interactive-setup runs, if zero-touch provisioning is enabled, it could be triggered in background before you have finished all the physical connections.

  NOTE
  If you use zero-touch provisioning, you should remove **zero-touch-enable** configuration after SPX system construction is complete. Otherwise, the system continues to send periodic zero-touch probes in background. While the continued probes are harmless, they waste CPU time and generate unnecessary packets.

- SPX interactive-setup displays the discovered topology.
- SPX interactive-setup includes options that allow you to select units or IDs.
- SPX interactive-setup also includes options that allow you to select units or links to transform an invalid topology into a valid topology.

Zero-touch and SPX interactive-setup deployment limitation

Zero-touch provisioning and SPX interactive-setup cannot detect a standalone unit that is connected behind a PE that has not joined the SPX system. Consider the following illustration. On the left is the original PE chain topology. Assume that you are replacing PE units 2, 3, and 5 with new units. Zero-touch and SPX interactive-setup can detect new units 2 and 3 (shown in the new topology on the right as NU 2 and NU 3). Neither utility can detect the new unit NU 5 because it is separated from the SPX system by PE unit 4, which has not joined the SPX system yet. PE unit 4 does not rejoin the SPX system until new units NU 2 and NU 3 have joined the system as PE units. To detect and convert NU 5 to a PE, you can initiate SPX interactive-setup again. If zero-touch provisioning is running, it will discover NU 5 the next time it is triggered (after six minutes).

FIGURE 37 Undetected standalone separated from active PE chain

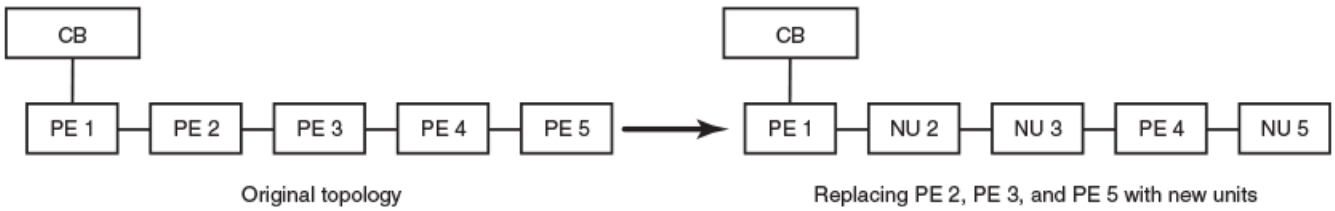

Zero-touch and SPX interactive-setup deployment recommendations

Keep the following points in mind when configuring the Campus Fabric domain with the zero-touch or SPX interactive-setup utility.

- Before LAGs are formed, individual links may cause loops, especially if CB or PE units are connected to clients running any control protocols.
- Multiple links between any two units cause loops until they are converted to an SPX LAG. SPX ports and SPX LAGs are recommended to avoid loops.
- Loops cause high traffic in the looped ports and may cause high CPU if looped packets are trapped to the CPU.
- The zero-touch utility does not run if the CPU level is greater than 96%. Instead, the utility issues a warning that suggests using the SPX interactive-setup utility.
- Loops should be resolved once the zero-touch or SPX interactive-setup utility has converted multiple links between any two units to SPX LAGs.
- As a best practice, you should remove **zero-touch-ports** configuration once PE discovery is complete. You should also disable **zero-touch-enable**.
- After PE discovery is complete and you have removed **zero-touch-enable** configuration, you can always run SPX interactive-setup to make changes to the existing system, for example, to move PE units or change PE IDs.
- Do not connect hosts or access points to PE candidates until zero-touch provisioning is complete.
- We recommend the SPX interactive-setup utility in a live production environment with connected hosts and access points.
- Zero-touch configuration works for PE candidates that have no configuration.
- Once new units have been connected to the Campus Fabric domain, check for loops by entering the **clear statistics** and then the **show statistics brief** commands on the CB. The packet counts displayed in command output should be low. If packet counts are high, that indicates loops in the system. The SPX interactive-setup utility can resolve all loops.

Manual configuration can always be used instead of zero-touch provisioning or SPX interactive-setup for greater control over the discovery process and to avoid loops and high CPU. Manual configuration requires these steps:

1. Configure correct SPX ports or LAGs on the CB and on new PE candidates.
2. Configure and reload new units to convert them to PEs. For more information, refer to Manually enabling and configuring PE units on page 76.
3. Physically connect the links.

NOTE
Zero-touch and SPX interactive-setup have enhancements to harden the discovery process as of FastIron release 8.0.61. Previously, if live clients were connected to switches waiting to be converted to PE units, there was a chance of loops. Now, loop packets are dropped until discovery is complete. This enhances the reliability of discovering all PE candidates and links under severe situations. The loops are removed after zero-touch or SPX interactive-setup changes multiple inter-switch links between two units into a LAG. If your system has no live traffic, you can connect new units the way you want without being concerned about creating loops. If your system has clients carrying live traffic, there are going to be temporary loops. As long as you allow zero-touch or SPX interactive-setup to discover all units and links, and change discovered units to PEs to generate appropriate running-configuration, the loops are handled and should resolve automatically.

Zero-touch configuration

The zero-touch utility can be used to discover and deploy new PE units without user intervention when the new units are presented in a valid configuration.

Use the **zero-touch-enable** command available under **spx configure** to enable the zero-touch utility. To identify new PE candidates, zero-touch probe packets are transmitted over CB SPX ports, SPX LAGs, the non-base-module ports of edge PE units, and user-configured zero-touch candidate ports.

NOTE
The first time you enable zero-touch configuration, the system sends a zero-touch probe within 60 seconds. If a CB port comes up or goes down, or if a port specified in the **zero-touch-ports** configuration or a CB SPX port or LAG with no connection becomes active, a zero-touch probe is also triggered within a minute. Otherwise, a probe is sent every six minutes.

NOTE
If a port is already up, adding it as an SPX port, adding it to an SPX LAG, or configuring it as a zero-touch port does not trigger the next zero-touch probe within 60 seconds.

NOTE
Ruckus recommends disabling zero-touch provisioning once PE discovery is complete.

When PE candidates are discovered in a valid topology, zero-touch candidate ports are converted to CB SPX ports or CB SPX LAGs so that the new PE units can join the Campus Fabric domain. The system displays a message about the new CB SPX ports and LAGs and prompts the user to execute the **write memory** command to save the new domain configuration.

You must configure the zero-touch candidate ports using the **zero-touch-ports** command before probe packets can be transmitted over them. Zero-touch ports can only be used to discover new PE units, not to modify existing SPX ports or LAGs. For information on configuring zero-touch-ports, refer to Using zero-touch to add PE units on page 54.

Topologies that support zero-touch configuration

The zero-touch utility works only for supported topologies. When the utility encounters an invalid topology, it displays a warning message, in which case you may opt to run the interactive-setup utility instead. The interactive-setup utility can be used for a broader range of topologies and allows the user to select PE candidates interactively for inclusion in the Campus Fabric domain. For more information on the interactive-setup utility refer to SPX interactive-setup on page 58.

The zero-touch utility can discover and automatically configure clean ICX 7150, ICX 7250, or ICX 7450 units as new PEs when they occur in one of the topologies covered in Topologies handled by zero-touch or SPX interactive-setup on page 38.

Additional zero-touch considerations

- The system checks the ports in any **zero-touch-ports** range you configure and allows the configuration only if all ports in the range are valid. None of the ports in the range may contain configuration.
- Once new PEs have been detected and added, the **zero-touch-ports** configuration should be removed to free the ports for other uses.
- The zero-touch utility automatically asigns PE IDs based on **spx pe-id** configuration or internal algorithms.
- The zero-touch utility automatically generates SPX ports or LAGs for the PE units.
- The end unit in a chain of new PE units is assigned only one SPX port or LAG.

Using zero-touch to add PE units

Use the zero-touch utility to add PE units to the Campus Fabric domain without having to make user selections.

Follow these steps to configure zero-touch deployment.

NOTE
The first time you enable zero-touch configuration, the system sends a zero-touch probe within 60 seconds. If a CB port comes up, or if a port specified in the **zero-touch-ports** configuration or a CB SPX port or LAG with no connection becomes active, a zero-touch probe is also triggered within a minute. Otherwise, a probe is sent every six minutes.

NOTE
If a port is already up, adding it as an SPX port, adding it to an SPX LAG, or configuring it as a zero-touch port does not trigger the next zero-touch probe within 60 seconds.

NOTE
Ruckus recommends disabling zero-touch provisioning once PE discovery is complete.

1. If necessary, create clean units. On the local console of each ICX 7150, ICX 7250, or ICX 7450 unit, enter the following.

```
Device# erase startup-config
!
!
Device# reload
!
!
```

   When the system asks wether to reload without saving the configuration enter **y**.

2. Attach clean ICX 7150, ICX 7250, or ICX 7450 units to the existing Campus Fabric domain as candidate PEs. The new units must have no startup_config flash.

   NOTE
   The example shows how to enable a standalone ICX 7750 as the CB before adding PE units. An ICX 7750 stack would add PE units in the same way. The running configuration may also show that the CB is already enabled.

3. Use the **show running-config** command to verify that the CB is enabled and to check SPX port and LAG configurations.

```
ICX7750-48F Router# show running-config
Current configuration:
!
ver 08.0.50b1T203
!
stack unit 1
  module 1 icx7750-48-xgf-port-management-module
  module 2 icx7750-qsfp-6port-qsfp-240g-module
  module 3 icx7750-6q-6port-qsfp-240g-module
!
!

no inline power non-pd-detection enable
ip ssl min-version tls_1_1
!
!

interface management 1
!
!

end
```

   In this example, the **show running-config** command indicates that the CB is not enabled on the ICX 7750 standalone unit.

4. If necessary, in global configuration mode, enter the **spx cb-enable** command to enable the CB. If spanning tree is present, you are prompted to confirm the reload. Type **y** when prompted.

```
ICX7750-48F Router# configure terminal
ICX7750-48F Router(config)# spx cb-enable
System is now in 802.1br control bridgee (CB) mode.

ICX7750-48F Router# configure terminal
ICX7750-48F Router(config)# spx cb-enable
Spanning Tree Protocols require a reload. Are you sure? (enter 'y' or 'n'): y
System is now in 802.1br control bridge (CB) mode.

1 Saved config, reloading the system...
!
!
```

   In the first example, the CB is enabled without a system reload. In the second example, the CB is enabled after a reload because Spanning Tree configuration is present.

5. Enter SPX CB configuration mode.

```
ICX7750-48F Router(config)# spx cb-config
```

6. If necessary, configure a CB SPX port or LAG that connects to the PE candidates.

```
ICX7750-48F Router(config-spx-cb)# spx-port 1/1/2
```

   The example configures SPX port 1/1/2.

   NOTE
   The sample SPX port is included here only for informational purposes and does not appear in the actual system configuration.

7. If necessary, configure the ports or range of ports over which zero-touch probe packets will be sent. (These are unconfigured ports, not CB SPX ports or LAGs, over which PE candidates should be detected.)

```
ICX7750-48F Router(config-spx-cb)# zero-touch-ports 1/1/3 1/1/16
```

   In the example, probe packets will be sent over ports 1/1/3 and 1/1/16 in addition to any configured SPX ports and SPX LAGs.

8. Enable the zero-touch utility.

```
ICX7750-48F Router(config-spx-cb)# zero-touch-enable
ICX7750-48F Router(config-spx-cb)# end
Send reload to chain0:  #2 CC4E.24DC.E9CE ID=18, D0: 2/3, D1: 2/5 to 2/6 2/8
 #1 CC4E.24DC.F166 ID=17, D0: 2/5 to 2/6 2/8, D1: 2/4

T=12m23.5: Add spx-port 1/1/16 for a discovered unit to join
T=12m23.6: Add spx-port 1/1/3 for a discovered unit to join
PE-port=17/2/4 CB-port=1/1/16
Sica Unit id:17, PoD License Capacity:8
PE-port=18/2/3 CB-port=1/1/3
Sica Unit id:18, PoD License Capacity:8
Stack unit 18 Power supply 1 is up
Stack unit 18 Power supply 2 is down
Stack unit 17 Power supply 1 is up
Stack unit 17 Power supply 2 is down
```

The example enables the zero-touch utility. A system reload of new units follows. CB SPX ports 1/1/16 and 1/1/3 are added because a PE candidate has been discovered over the zero-touch-ports. New PE unit 17 is connected through PE port 17/2/4, and new PE unit 18 is connected through port 18/2/3.

NOTE
The **zero-touch-enable** command disables the interactive-setup utility if it has been enabled.

The CB notifies you of PE candidates discovered, assigns PE IDs, and displays the new configuration including auto-generated SPX connections.

NOTE
If the CB encounters an unsupported topology, it displays a warning message.

NOTE
If you do not want to accept the PE ID or the new configuration, or if the zero-touch utility issued a warning and could not handle the topology, you can attempt an interactive setup instead. Refer to SPX interactive-setup on page 58 for more information.

9. Enter the write memory command to save the configuration change.

```
ICX7750-48F Router# write memory
```

10. Confirm the configuration with the **show spx** command.

```
ICX7750-48F Router# show spx
T=20m3.1: alone: standalone, D: dynamic cfg, S: static
ID   Type          Role    Mac Address    Pri State   Comment
1  S ICX7750-48XGF alone   cc4e.24d2.2c00   0 local   Ready
17 D ICX7250-24    spx-pe  cc4e.24dc.f166 N/A remote  Ready
18 D ICX7250-24    spx-pe  cc4e.24dc.e9ce N/A remote  Ready


    +---+
  2/1| 1 |2/4
    +---+
          +-----+        +-----+
  1/1/3--2/3| 18 |2/5==2/5| 17 |2/4--1/1/16
          +-----+        +-----+
```

The example displays the Campus Fabric domain configuration. The standalone CB has added two ICX 7250 PE units, 17 and 18. They are configured in a ring and are connected to the CB through CB SPX ports 1/1/3 (at PE port 18/2/3) and 1/1/16 (at PE port 17/2/4).

The following example configures a standalone as a CB, establishes two zero-touch ports, enables the zero-touch utility, and adds two PE units to form a Campus Fabric domain.

```
ICX7750-48F Router> enable
No password has been assigned yet...
ICX7750-48F Router# show running-config
Current configuration:
!
ver 08.0.50b1T203
!
stack unit 1
  module 1 icx7750-48-xgf-port-management-module
  module 2 icx7750-qsfp-6port-qsfp-240g-module
  module 3 icx7750-6q-6port-qsfp-240g-module
!
!
no inline power non-pd-detection enable
ip ssl min-version tls_1_1
!
!
interface management 1
!
!
end
ICX7750-48F Router# configure terminal
ICX7750-48F Router(config)# spx cb-enable
System is now in 802.1br control bridge (CB) mode.
ICX7750-48F Router(config)# spx cb-config
ICX7750-48F Router(config-spx-cb)# zero-touch-ports 1/1/3 1/1/16
ICX7750-48F Router(config-spx-cb)# zero-touch-enable
ICX7750-48F Router(config-spx-cb)# end
Send reload to chain0:  #2 CC4E.24DC.E9CE ID=18, D0: 2/3, D1: 2/5 to 2/6 2/8
 #1 CC4E.24DC.F166 ID=17, D0: 2/5 to 2/6 2/8, D1: 2/4

T=12m23.5: Add spx-port 1/1/16 for a discovered unit to join
T=12m23.6: Add spx-port 1/1/3 for a discovered unit to join
PE-port=17/2/4 CB-port=1/1/16
Sica Unit id:17, PoD License Capacity:8
PE-port=18/2/3 CB-port=1/1/3
Sica Unit id:18, PoD License Capacity:8
Stack unit 18 Power supply 1 is up
Stack unit 18 Power supply 2 is down
Stack unit 17 Power supply 1 is up
Stack unit 17 Power supply 2 is down

ICX7750-48F Router# show spx
T=20m3.1: alone: standalone, D: dynamic cfg, S: static
ID   Type          Role    Mac Address    Pri State   Comment
1  S ICX7750-48XGF alone   cc4e.24d2.2c00   0 local   Ready
17 D ICX7250-24    spx-pe  cc4e.24dc.f166 N/A remote  Ready
18 D ICX7250-24    spx-pe  cc4e.24dc.e9ce N/A remote  Ready


     +---+
  2/1| 1 |2/4
     +---+
           +-----+        +-----+
  1/1/3--2/3| 18 |2/5==2/5| 17 |2/4--1/1/16
           +-----+        +-----+
ICX7750-48F Router# write memory
```

SPX interactive-setup

SPX interactive-setup is an interactive tool that guides the user through Campus Fabric configuration. It can be used to configure a broader range of topologies than the zero-touch utility.

> **NOTE**
> For more information on the topologies that the SPX interactive-setup utility handles, refer to Zero-touch and SPX interactive-setup topology requirements on page 45.

The SPX interactive-setup utility handles a variety of SPX topologies by prompting the user to make necessary configuration selections to render the topology valid. You can use interactive-setup to configure a new Campus Fabric domain or to add units to an existing domain. The utility can also help you change PE IDs or convert an existing stack of ICX 7150, ICX 7250, or ICX 7450 units to a PE chain or ring.

Changing PE IDs with SPX interactive-setup

SPX interactive-setup makes changing PE IDs simpler.

The procedure assumes that SPX has been enabled as described in this guide.

Follow these steps to change assigned PE IDs in a Campus Fabric domain with SPX interactive-setup.

NOTE
The new PE ID can be any ID including an existing or provisional PE ID. The exception is an ID that causes a module mismatch.

1. Use the **show running-config** command to verify that the CB is enabled and to check SPX port and LAG configurations.

```
ICX7750-48F Router(config)# show running-config
Current configuration:
!
ver 08.0.50b1T203
!
stack unit 1
  module 1 icx7750-48-xgf-port-management-module
  module 2 icx7750-qsfp-6port-qsfp-240g-module
  module 3 icx7750-6q-6port-qsfp-240g-module
spx unit 17
  module 1 icx7250-24-port-management-module
  module 2 icx7250-sfp-plus-8port-80g-module
  spx-port 17/2/4
  spx-lag 17/2/5 to 17/2/6 17/2/8
spx unit 18
  module 1 icx7250-24-port-management-module
  module 2 icx7250-sfp-plus-8port-80g-module
  spx-port 18/2/3
  spx-lag 18/2/5 to 18/2/6 18/2/8
!
!

spx cb-enable
spx cb-configure
  zero-touch-enable
  spx-port 1/1/3
  spx-port 1/1/16
  zero-touch-ports 1/1/3 to 1/1/16
  pe-id 1/1/3 18 17 1/1/16
!
!
no inline power non-pd-detection enable
ip ssl min-version tls_1_1
!
!
interface management 1
!
!
end
```

In this example, the **show running-config** command indicates that the CB is already enabled. The zero-touch utility is also enabled and must be disabled. Two CB SPX ports (1/1/3 and 1/1/16) are configured, and a range of ports are identified by the **zero-touch-ports** configuration to detect new PE candidates. Two PEs, 17 and 18, are attached to the CB (a standalone ICX 7750).

2. If necessary, disable the zero-touch utility.

```
ICX7750-48F Router(config-spx-cb)# no zero-touch-enable      <-- You cannot run spx interactive-
                                                                 setup when zero-touch
                                                                 is enabled.
ICX7750-48F Router(config-spx-cb)# end
```

In the example, the zero-touch utility is disabled as a precursor to enabling interactive-setup.

3. In Privileged EXEC mode, enable the spx interactive-setup utility.

```
ICX7750-48F Router# spx interactive-setup
You can abort spx interactive-setup at any stage by <ctrl-c>
0: quit
1: change PE IDs
2: discover and convert new units (no startup-config flash) to PEs
3: discover and convert existing/new standalone units to PEs
2&3 can also find new links and convert chain(s) to ring.
```

   The example shows the options available when you start the interactive-setup utility.

4. When prompted, type "1" to change PE IDs.

```
Please type your selection: 1
            +-----+        +-----+
  1/1/3--2/3| 18 |2/5==2/5| 17 |2/4--1/1/16
            +-----+        +-----+
```

5. When prompted, type the new ID for each PE unit. After you complete your entry, type **done**. If you do not want to change the ID of a particular PE, press the Enter key. At the end of the PE list, you are prompted to confirm or cancel your entries.

   NOTE
   A PE ID can be changed to any legitimate ID, even if it is used by an existing PE. For example, you can swap two IDs. There are a few exceptions:

   - The module configuration of the new ID must either be empty or match the PE.
   - SPX port or LAG configuration, including speed configuration, must match.

   If you try to change a PE ID using an existing ID or provisional PE ID with a module mismatch, the ID selection is blocked, and SPX interactive-setup prints a warning similar to the following message.

```
Error! PE21 --> 51 requires same modules or no PE51 configuration.
Allowed IDs: 18,21,26-29,33-39,42-49,52-56
```

   If you select an existing or provisional ID that would result in an SPX port or SPX LAG configuration mismatch, the system blocks the configuration and displays a warning similar to the following message.

```
Error! PE21 --> 23 requires same spx-port/lag or no PE23 configuration.
Allowed IDs: 18,21,26-29,33-39,42-49,52-56
```

If you select an existing or provisional ID that would result in an SPX port or SPX LAG speed mismatch, the system blocks the configuration and displays a warning similar to the following message.

```
Error! PE21 --> 32: Port 21/2/2 and 32/2/2 have different speed configuration.
Allowed IDs: 18,21,26-29,33-39,42-49,52-56
```

NOTE
After a PE is re-numbered, the old configuration still exists if it is a static unit. The system does not convert the old configuration to the new IDs. For example, if PE 20 changes its ID to 30, the system does not move interface 20/1/1 configuration to interface 30/1/1.

NOTE
You can type **n** to cancel. If you need to cancel later, type **Cntrl-C** at any time.

6. Type **y** to confirm your changes.

   You do not need to physically detach or un-configure any unit. The system temporarily disables any SPX ports or LAGs necessary to detach the affected PE units. After a few seconds, the ports are re-enabled, allowing the PEs to join with new PE IDs.

```
Type "done" to finish, or a new ID for PE 18 (default 18): 23
Type "done" to finish, or a new ID for PE 17 (default 17): 24
Change IDs: 18->23, 17->24,
Do you want to proceed? (enter 'y' or 'n'): y
T=14m43.4: Sending new IDs to PE(s) 17-18...
power down ports to detach PEs: 1/1/3 1/1/16
power up ports: 1/1/3 1/1/16.
Affected PEs will join with new IDs.
Exit spx interactive-setup, reason: done ID changes
Sica Unit id:24, PoD License Capacity:8
Stack unit 24 Power supply 1 is up
Stack unit 24 Power supply 2 is down
Sica Unit id:23, PoD License Capacity:8
Stack unit 23 Power supply 1 is up
Stack unit 23 Power supply 2 is down
sh spx
T=17m13.2: alone: standalone, D: dynamic cfg, S: static
ID   Type          Role    Mac Address    Pri State   Comment
1  S ICX7750-48XGF alone   cc4e.24d2.2c00   0 local   Ready
23 D ICX7250-24    spx-pe  cc4e.24dc.e9ce N/A remote  Ready
24 D ICX7250-24    spx-pe  cc4e.24dc.f166 N/A remote  Ready


     +---+
  2/1| 1 |2/4
     +---+
           +-----+        +-----+
  1/1/3--2/3| 23 |2/5==2/5| 24 |2/4--1/1/16
           +-----+        +-----+
```

   The example changes the ID for PE 18 to 23 and the ID for PE 17 to 24. At the end of the process, the SPX configuration is displayed, showing the new PE IDs.

7. Execute the write memory command to save the configuration.

```
ICX7750-48F Router# write memory
```

The following example uses the SPX interactive-setup utility to change two existing PE IDs.

```
ICX7750-48F Router# configure terminal
ICX7750-48F Router(config)# show running-config
Current configuration:
!
ver 08.0.50b1T203
!
stack unit 1
  module 1 icx7750-48-xgf-port-management-module
  module 2 icx7750-qsfp-6port-qsfp-240g-module
  module 3 icx7750-6q-6port-qsfp-240g-module
spx unit 17
  module 1 icx7250-24-port-management-module
  module 2 icx7250-sfp-plus-8port-80g-module
  spx-port 17/2/4
  spx-lag 17/2/5 to 17/2/6 17/2/8
spx unit 18
  module 1 icx7250-24-port-management-module
  module 2 icx7250-sfp-plus-8port-80g-module
  spx-port 18/2/3
  spx-lag 18/2/5 to 18/2/6 18/2/8
!
!
spx cb-enable
spx cb-configure
  zero-touch-enable
  spx-port 1/1/3
  spx-port 1/1/16
  zero-touch-ports 1/1/3 to 1/1/16
  pe-id 1/1/3 18 17 1/1/16
!
!
no inline power non-pd-detection enable
ip ssl min-version tls_1_1
!
!
interface management 1
!
!
end
ICX7750-48F Router(config)# spx cb-config
ICX7750-48F Router(config-spx-cb)# no zero-touch-enable      <-- You cannot run spx interactive-
                                                                 setup when zero-touch is enabled.
ICX7750-48F Router(config-spx-cb)# end
ICX7750-48F Router# spx interactive-setup
You can abort spx interactive-setup at any stage by <ctrl-c>
0: quit
1: change PE IDs
2: discover and convert new units (no startup-config flash) to PEs
3: discover and convert existing/new standalone units to PEs
2&3 can also find new links and convert chain(s) to ring.
Please type your selection: 1
            +----+        +----+
  1/1/3--2/3| 18 |2/5==2/5| 17 |2/4--1/1/16
            +----+        +----+

Type "done" to finish, or a new ID for PE 18 (default 18): 23
Type "done" to finish, or a new ID for PE 17 (default 17): 24
Change IDs: 18->23, 17->24,
Do you want to proceed? (enter 'y' or 'n'): y
T=14m43.4: Sending new IDs to PE(s) 17-18...
power down ports to detach PEs: 1/1/3 1/1/16
power up ports: 1/1/3 1/1/16.
Affected PEs will join with new IDs.
Exit spx interactive-setup, reason: done ID changes
Sica Unit id:24, PoD License Capacity:8
Stack unit 24 Power supply 1 is up
Stack unit 24 Power supply 2 is down
Sica Unit id:23, PoD License Capacity:8
Stack unit 23 Power supply 1 is up
```

```
Stack unit 23 Power supply 2 is down
sh spx
T=17m13.2: alone: standalone, D: dynamic cfg, S: static
ID   Type          Role    Mac Address    Pri State   Comment
1  S ICX7750-48XGF alone   cc4e.24d2.2c00   0 local   Ready
23 D ICX7250-24    spx-pe  cc4e.24dc.e9ce N/A remote  Ready
24 D ICX7250-24    spx-pe  cc4e.24dc.f166 N/A remote  Ready


     +---+
  2/1| 1 |2/4
     +---+
           +-----+        +-----+
  1/1/3--2/3| 23 |2/5==2/5| 24 |2/4--1/1/16
           +-----+        +-----+
ICX7750-48F Router# write memory
```

Configuring SPX to move PE units without changing IDs

You can move PE units to a new port and retain their current IDs with **spx allow-pe-movement** configured.

When **spx allow-pe-movement** is configured, the existing PE ID is used, and the **pe-id** configuration typically used in PE ID assignment is ignored. When you move a PE unit to a new port, the system detaches the port, and protocols register a "port down" event. When the PE joins with the same PE number on a new SPX port or LAG, the unit is treated as a new PE, and protocols initialize normally. All port configuration in the PE still applies.

NOTE
When you move a PE to a different CB or PE port, make sure the CB or PE port is properly configured as an SPX port or SPX LAG.

NOTE
You cannot use **spx allow-pe-movement** configuration to replace a faulty PE with another PE taken from the same Campus Fabric domain. The other PE will retain its ID. To avoid this problem, you can use the **no spx allow-pe-movement** command to remove the configuration, and then move and replace the PE. The replacement PE is then assigned the ID of the unit it is replacing.

NOTE
Ruckus recommends removing **spx allow-pe-movement** configuration once you are finished moving PE units. After removing the configuration, execute the **write memory** command.

Perform these steps to allow PEs to be moved and retain their current PE IDs.

1. Enter global configuration mode on the CB active controller.

   ```
   device# configure terminal
   ```

2. Enter the **spx allow-pe-movement** command.

   ```
   device(config)# spx allow-pe-movement
   ```

3. Move a PE, PE chain, or portion of a PE chain from one SPX port or LAG to another SPX port or LAG.

   When the PE or PEs rejoin, the system assigns them the same ID they had before they were moved. The system generates PE ID configurations to represent the new topology.

4. Enter the **write memory** command to save the new configuration.

   ```
   device(config)# write memory
   ```

The following example shows the Campus Fabric domain configuration prior to PE movement.

```
ICX7750-20Q Router# show spx
T=3h54m11.6: alone: standalone, D: dynamic cfg, S: static
ID   Type          Role    Mac Address    Pri State   Comment
1  S ICX7750-20QXG standby cc4e.24cf.2780 128 remote  Ready
2  S ICX7750-20QXG active  cc4e.24d1.9d80 128 local   Ready
17 S ICX7450-48G   spx-pe  609c.9f2a.5420 N/A remote  Ready
18 S ICX7250-24    spx-pe  609c.9f42.0a28 N/A remote  Ready
19 S ICX7250-24    spx-pe  0000.0000.0000 N/A reserve
51 S ICX7450-48G   spx-pe  609c.9f29.a560 N/A remote  Ready
52 D ICX7450-48G   spx-pe  609c.9f2a.5be0 N/A remote  Ready
53 D ICX7450-48G   spx-pe  609c.9f2a.54e0 N/A remote  Ready

    standby      active
     +---+        +---+
  2/4| 1 |2/1==2/1| 2 |
     +---+        +---+
           +-----+        +-----+
  2/1/1--4/1| 17 |2/1--2/3| 18 |2/2-
           +-----+        +-----+

           +-----+        +-----+        +-----+
  1/1/1--4/1| 51 |3/1--3/1| 52 |2/3--2/1| 53 |
           +-----+        +-----+        +-----+
```

The following example configures the Campus Fabric domain so that PE units can retain their current IDs when the units are moved to different ports. In the example, PE unit 53 is moved from port 52/2/3 to port 18/2/2. PE unit 53 retains its ID (although it might have logically been assigned PE ID 19).

```
ICX7750-20Q Router# configure terminal
ICX7750-20Q Router(config)# spx allow-pe-movement
ICX7750-20Q Router(config)# show spx

!
!
!
T=4h2m50.3: alone: standalone, D: dynamic cfg, S: static
ID   Type          Role    Mac Address    Pri State   Comment
1  S ICX7750-20QXG standby cc4e.24cf.2780 128 remote  Ready
2  S ICX7750-20QXG active  cc4e.24d1.9d80 128 local   Ready
17 S ICX7450-48G   spx-pe  609c.9f2a.5420 N/A remote  Ready
18 S ICX7250-24    spx-pe  609c.9f42.0a28 N/A remote  Ready
19 S ICX7250-24    spx-pe  0000.0000.0000 N/A reserve
51 S ICX7450-48G   spx-pe  609c.9f29.a560 N/A remote  Ready
52 D ICX7450-48G   spx-pe  609c.9f2a.5be0 N/A remote  Ready
53 D ICX7450-48G   spx-pe  609c.9f2a.54e0 N/A remote  Ready

    standby      active
     +---+        +---+
  2/4| 1 |2/1==2/1| 2 |
     +---+        +---+
           +-----+        +-----+        +-----+
  2/1/1--4/1| 17 |2/1--2/3| 18 |2/2--2/1| 53 |
           +-----+        +-----+        +-----+

           +-----+        +-----+
  1/1/1--4/1| 51 |3/1--3/1| 52 |2/3-
           +-----+        +-----+

ICX7750-20Q Router(config)# write memory
```

Converting a stack to a PE chain or ring

- PE candidates must be clean units (with no startup-config).

- The CB must be enabled.
- The CB must be connected to the candidate PEs (the former stack).
- Because the procedure uses the SPX interactive-setup utility, the zero-touch utility must be disabled.

To convert an existing ICX 7150, ICX 7250, or ICX 7450 stack to a PE chain or ring, you must first dismantle the entire stack by issuing the **erase startup-config** command and then the **reload** command without saving the configuration on the stack active controller. The active controller erases the startup configuration of every unit in the stack and reloads every unit, including itself, as a new unit. This process is shown in the following example.

```
ICX7450-48F Router# show stack
T=6m11.5: alone: standalone, D: dynamic cfg, S: static
ID   Type          Role    Mac Address    Pri State   Comment
1  S ICX7450-48GF  active  cc4e.246c.f190 128 local   Ready
2  S ICX7450-48G   standby cc4e.248b.77b0   0 remote  Ready

    standby      active
     +---+        +---+
     | 2 |2/1==2/1| 1 |2/3
     +---+        +---+
Standby u2 - Learn other units for 4 sec, protocols may not be ready in 66 s.
Current stack management MAC is cc4e.246c.f190
ICX7450-48F Router#
ICX7450-48F Router#
ICX7450-48F Router# erase startup-config
T=6m26.9: Erase request sent to unit 2
Erase startup-config Done.
dhcp server lease database is also removed
stacking/spx pe flash file is also removed
ICX7450-48F Router# reload
Are you sure? (enter 'y' or 'n'): y
Could not verify if the Running Config data has been changed.
Do you want to continue the reload anyway? (enter 'y' or 'n'): y
ICX7450-48F Router#T=6m38.6: Reload request sent to attached stack member(s): 2...

Will reload in 3 seconds
T=6m41.6: Halt and reboot
```

Follow the zero-touch or SPX interactive-utility procedure, and include the following steps.

1. If the stack is to be connected to CB ports, configure **zero-touch-ports** or an SPX port or SPX LAG on the CB. If the stack is to be connected to an edge PE, the connection must be through a non-base-module port on the PE.
2. Connect at least one non-base module port of the old stack to the CB or an edge PE.
3. Configure **zero-touch-enable** or run the SPX interactive-setup utility. If the old stack is a ring, run the SPX interactive-setup utility because it allows users to remove links between two units to break a ring.
4. If the old stack is a ring, physically remove links to break the ring before or after running the SPX interactive-setup utility.

The following example uses spx interactive-setup to discover and add a connected ring of two PEs (ICX 7250 units).

```
ICX7750-48F Router# configure terminal
ICX7750-48F Router(config)# spx cb-enable
System is now in 802.1br control bridge (CB) mode.
ICX7750-48F Router(config)# spx cb-config
ICX7750-48F Router(config-spx-cb)# spx-port 1/1/3
ICX7750-48F Router(config-spx-cb)# spx-port 1/1/16
ICX7750-48F Router# spx interactive-setup
You can abort spx interactive-setup at any stage by <ctrl-c>
0: quit
1: change PE IDs
2: discover and convert new units (no startup-config flash) to PEs
3: discover and convert existing/new standalone units to PEs
2&3 can also find new links and convert chain(s) to ring.
Please type your selection: 2
Probing topology to find new units...
Horizontal bars link to discovered units. Vertical bars link to CB or PEs.
#1: icx7250-24-port-management-module CC4E.24DC.E9CE
#2: icx7250-24-port-management-module CC4E.24DC.F166
   1/1/3         1/1/16
     |             |
     |             |
    2/3           2/4
   +----+        +----+
   | 1  |2/5==2/5| 2  |
   +----+        +----+
Discovered 1 chain/ring
chain #0: Do you want to select this chain?(enter 'y' or 'n'): y
#1: icx7250-24-port-management CC4E.24DC.E9CE, type an ID (No: 0, default: 17): <-- You can change
                                                                                    the default id,
                                                                                    or just type
                                                                                    enter to use
                                                                                    the default.
#2: icx7250-24-port-management CC4E.24DC.F166, type an ID (No: 0, default: 18):
2 unit(s) selected: #1: ID=17, #2: ID=18,
             #1            #2
           +----+        +----+
 1/1/3--2/3| 17 |2/5==2/5| 18 |2/4--1/1/16
           +----+        +----+
Will produce the above topology. Do you accept it? (enter 'y' or 'n'): y
spx interactive-setup discovers 1 chain(s). valid #=1, selected #=1
Send reload to chain0: #1 CC4E.24DC.E9CE ID=17, D0: 2/3, D1: 2/5 to 2/6 2/8
#2 CC4E.24DC.F166 ID=18, D0: 2/5 to 2/6 2/8, D1: 2/4
U18-MSG: PS 1, Internal Power supply is up.
Sica Unit id:18, PoD License Capacity:8
Sica Unit id:17, PoD License Capacity:8
ICX7750-48F Router# show spx
T=42m39.1: alone: standalone, D: dynamic cfg, S: static
ID Type Role Mac Address Pri State Comment
1 S ICX7750-48XGF alone cc4e.24d2.2c00 0 local Ready
17 D ICX7250-24 spx-pe cc4e.24dc.e9ce N/A remote Ready
18 D ICX7250-24 spx-pe cc4e.24dc.f166 N/A remote Ready

     +---+
  2/1| 1 |2/4
     +---+

           +----+        +----+
  1/1/3--2/3| 17 |2/5==2/5| 18 |2/4--1/1/16
           +----+        +----+
ICX7750-48F Router# write memory
```

Converting a PE chain or chains to a ring

Follow these steps to discover new physical links between a CB and an edge PE or between two edge PEs and form a PE ring from one or two PE chains.

1. Make all necessary physical connections between two edge PEs or between an edge PE and the CB. At least one end of the link must be one of these port types:
   - CB SPX port or SPX LAG member with no live PE link
   - CB port with zero-touch port configuration
   - Edge PE port on a non-base-module (2, 3, and 4 are non-base modules), excluding upstream SPX port or SPX LAG members and ports with configuration. In this case, the edge PE is the last unit of a PE chain.
2. (Optional, recommended) Connect multiple links between two units. The system will generate an SPX LAG connection on both units that includes all the links.
3. Initiate the conversion in one of these ways:
   - In EXEC mode, enter the **spx interactive-setup** command, and select either option 2 or 3 when prompted.

     ```
     ICX7750-20Q Router# spx interactive-setup
     You can abort spx interactive-setup at any stage by <ctrl-c>
     CBPE17PE18PE20PE21PE24data portPE21PE241G10Ga) T-connectionb) CB data portsd) different
     speedsPE21PE24c) PE data ports have configurationconfig
     0: quit
     1: change PE IDs
     2: discover and convert new units (no startup-config flash) to PEs
     3: discover and convert existing/new standalone units to PEs
     2&3 can also find new links and convert chain(s) to ring.
     Please type your selection: 2
     Probing topology to find new units...
     ```

   - Enable zero-touch provisioning.

     ```
     ICX7750-20Q Router(config)# spx cb-config
     ICX7750-20Q Router(config-spx-cb)# zero-touch-enable
     ```

   New links are detected. Any invalid connection is reported in a system message, and you are asked to remove it. Valid connections and ring formation are reported in system output.

   The following example shows a warning message received after an invalid connection was detected.

   ```
   Warning! The following 1 logical link(s) are invalid. Please remove them because they may cause
   loops.
   CB--PE17: error: CB 1/1/5 isn't spx-port/lag or ZTP-ports, 2 link(s): 1/1/5-17/3/1 1/1/7-17/4/1
   Spx interactive-setup does not find any new unit
   spx interactive-setup detects invalid topology, aborts
   ```

   The following example shows a system message received when a valid connection is detected that cannot be handled by the system. In this case, you are requested to use the **multi-spx-port** or **multi-spx-lag** command to add the link, or to remove the link to avoid loops.

   ```
   The following 1 logical link(s) would expand existing spx-port/lag. They are not handled.
   Please manually use "multi-spx-port/lag" to add the link to existing spx-port/lag, or remove them
   because they may cause loops.
   PE17--PE27: 1 link(s): 17/2/1-27/2/1
   ```

4. After the process completes, enter the **write memory** command to save the newly generated SPX port and SPX LAG configuration.

The following example shows SPX interactive-setup discovery of new links and conversion of two PE chains to a PE ring. Zero-touch provisioning works the same way but does not ask for user confirmation.

```
ICX7750-20Q Router# spx interactive-setup
You can abort spx interactive-setup at any stage by <ctrl-c>
CBPE17PE18PE20PE21PE24data portPE21PE241G10Ga) T-connectionb) CB data portsd) different speedsPE21PE24c) PE
data ports have configurationconfig
0: quit
1: change PE IDs
2: discover and convert new units (no startup-config flash) to PEs
3: discover and convert existing/new standalone units to PEs
2&3 can also find new links and convert chain(s) to ring.
Please type your selection: 2
Probing topology to find new units...
Detect 2 new links (classified to 1 logical link) between existing units.
New logical link 0: ======================================================
          +-----+        +-----+        +-----+        +-----+
2/1/9--4/1| 23 |2/1==2/1| 24 |2/5==2/1| 25 |2/5==2/5| 26 |
          +-----+        +-----+        +-----+        +-----+
          +-----+        +-----+
1/1/5==3/1| 17 |2/1==2/1| 27 |
          +-----+        +-----+
The new logical link (PE26--PE27: 2 link(s): 26/2/1-27/2/3 26/2/2-27/2/4) will make the above two chains to
form a ring.
Do you want to select this link? (enter 'y' or 'n'): y
spx interactive-setup discovers 1 link (valid#= 1, selected#= 1) and 0 chain
ICX7750-20Q Router#T=53m40.8: Add spx-lag 26/2/1 to 26/2/2 for PE 26 to form a ring. Please do "write
memory".
T=53m40.8: Add spx-lag 27/2/3 to 27/2/4 for for PE 27 to form a ring. Please do "write memory".

ICX7750-20Q Router# write memory
ICX7750-20Q Router# show spx
… snipped
active standby
    +---+        +---+        +---+
=2/1| 2 |2/4--2/4| 3 |2/1==2/1| 1 |2/4=
|   +---+        +---+        +---+   |
|                                     |
|-------------------------------------|
          +-----+        +-----+        +-----+        +-----+        +-----+
1/1/5==3/1| 17 |2/1==2/1| 27 |2/3==2/1| 26 |2/5==2/5| 25 |2/1==2/5| 24 |2/1=
          +-----+        +-----+        +-----+        +-----+        +-----+   |
                                                                               |
                                                                      +-----+   |
                                                          2/1/9--4/1| 23 |2/1=
                                                                      +-----+
```

Downloading images to new units before converting them to PEs with SPX interactive-setup or zero-touch provisioning

Zero-touch provisioning and SPX interactive-setup can detect standalones running different software images before they reload them as PEs. However, the PEs with mismatched software images are put into non-operational state when they join the SPX system. If the **tftp-server** command is configured, the CB copies new images to non-operational PEs. You also have the option to copy the images manually to all PEs using the **copy tftp flash** command. After the new image has been copied, the new PEs can be reloaded so that they run the correct image. There are a few drawbacks to the overall process:

1. The process requires two reloads. First, the standalone must be reloaded as a PE. Then, after any PE with a mismatched image has joined the SPX system and the correct image has been copied to it, it must be reloaded to run the correct image.
2. Due to the difference in IPC version, a PE running a different major image (for example, a release 08.0.61 image instead of an 08.0.70 image) may not join the SPX system. In this case, you cannot use SPX system capabilities to copy images from the CB to the PE unit.

3. Any PE running a different image is put into non-operational state and has very limited function. For example, all data ports are in the down state.

From release 08.0.70, if new units are running a different software image, zero-touch provisioning and SPX interactive-setup downloads the correct image to the new units before reloading them as PEs.

NOTE
A new unit is one that does not have startup-config flash. You can create a new unit by removing startup-config with the **erase startup-config** command followed by the **reload** command.

For zero-touch provisioning or SPX interactive-setup to download images, you must first configure the **tftp-server** command with the location of the correct images. When the **tftp-server** command is not configured or **image-auto-copy** is disabled, zero-touch provisioning and SPX interactive-setup respond differently. The following table summarizes the differences in behavior.

TABLE 8 Differences in SPX interactive-setup and zero-touch image download behavior

Utility	tftp-server is configured	image-auto-copy disabled or tftp-server not configured
SPX interactive-setup	download image	Asks for user confirmation to abort or reload new units as PEs without downloading images
Zero-touch provisioning	download image	Prints a messages, generates a syslog entry, and aborts

Here are some additional key points about how SPX interactive-setup and zero-touch provisioning handle image downloads.

1. Zero-touch provisioning discovers only new units. SPX interactive-setup detects new units as well as other units with configuration. However, SPX interactive-setup does not copy images to any units that are not new, even if they are running a different image. Instead, it prints a message similar to the following example asking you to indicate whether to abort or to convert all units to PEs without downloading images.

```
Proceeding will produce the above topology. Do you accept it? (enter 'y' or 'n'): y
spx interactive-setup discovers 1 chain (valid#= 1, selected#= 1)
Detects 4 units running different images but 1 unit (17) are not clean units.
You can abort (y) or proceed (n) without downloading images: (enter 'y' or 'n'): n
SYSLOG: <14> Apr 14 11:48:38 INTERACTIVE SETUP: Send reload to chain 0
```

2. SPX interactive-setup and zero-touch provisioning print a message and abort when any image download to a unit fails, even if some unit downloads were successful.
3. SPX interactive-setup and zero-touch provisioning do not download images to new units that are running the same image as the SPX system.
4. SPX interactive-setup and zero-touch provisioning must wait for all image downloads to complete before reloading any unit as a PE.

The following example shows an image download using SPX interactive-setup.

```
ICX7750-20Q Router# spx interactive-setup
You can abort spx interactive-setup at any stage by <ctrl-c>
0: quit
1: change PE IDs
2: discover and convert new units (no startup-config flash) to PEs
3: discover and convert existing/new standalone units to PEs
2&3 can also find new links and convert chain(s) to ring.

Please type your selection: 2
Probing topology to find new units...
Horizontal bars link to discovered units. Vertical bars link to CB or PEs.
#1: icx7450-48p-poe-management 609C.9F2A.D460 (image mismatch: SPR08070b1TEST)
#2: icx7450-48p-poe-management 609C.9F2A.97E0
```

```
#3: icx7250-24-port-management 609C.9F04.6F90 (image mismatch: SPR08070b1TEST)
#4: icx7250-24-port-management 609C.9F04.68AC (image mismatch: SPR08070b1TEST)
#5: icx7250-24-port-management 609C.9F04.5E68
#6: icx7450-48f-sf-port-management CC4E.246C.F190
1/1/5
 ||
 ||
 3/1
+----+        +----+        +----+        +----+        +----+
| 1  |2/1==2/1| 2  |2/3==2/1| 3  |2/5==2/5| 4  |2/1==2/5| 5  |2/1=
+----+        +----+        +----+        +----+        +----+   |
                                                                 |
                                                        +----+   |
                                                        | 6  |2/1=
                                                        +----+
                                                         4/1
                                                          |
                                                          |
                                                        2/1/9
Discovered 1 chain/ring
Chain #0: Do you want to select this chain? (enter 'y' or 'n'): y
#1: icx7450-48p-poe 609C.9F2A.D460, *** image mismatch, type an ID (No: 0, default: 17):
#2: icx7450-48p-poe 609C.9F2A.97E0, type an ID (No: 0, default: 18):
#3: icx7250-24-port 609C.9F04.6F90, *** image mismatch, type an ID (No: 0, default: 21):
#4: icx7250-24-port 609C.9F04.68AC, *** image mismatch, type an ID (No: 0, default: 28):
#5: icx7250-24-port 609C.9F04.5E68, type an ID (No: 0, default: 29):
#6: icx7450-48f-sf-port CC4E.246C.F190, type an ID (No: 0, default: 32):
You selected 6 unit(s): #1: ID=17, #2: ID=18, #3: ID=21, #4: ID=28, #5: ID=29, #6: ID=32,
           #1            #2            #3            #4            #5
          +----+        +----+        +----+        +----+        +----+
1/1/5==3/1| 17 |2/1==2/1| 18 |2/3==2/1| 21 |2/5==2/5| 28 |2/1==2/5| 29 |2/1=
          +----+        +----+        +----+        +----+        +----+   |
                                                                    #6     |
                                                                   +----+   |
                                                        2/1/9--4/1| 32 |2/1=
                                                                  +----+
Proceeding will produce the above topology. (*** NOTE: #1 #3 #4 will download image) Do you accept it?
(enter 'y' or 'n'): y
spx interactive-setup discovers 1 chain (valid#= 1, selected#= 1)
Note: must download images to 3 new unit(s): #17,21,28
SYSLOG: <14> Apr 13 19:42:19 INTERACTIVE SETUP: spx interactive-setup discovers 1 chain (valid#= 1,
selected#= 1)
SYSLOG: <14> Apr 13 19:42:19 System: Image mismatch Auto Copy Started for primary image for units 17 21 28
Load to buffer (8192 bytes per dot)
.....................................................................................................
.....................................................................................................
.....................................................................................................
.....................................................................................................
.....................................................................................................
.....................................................................................................
.....................................................................................................
.....................................................................................................
.....................................................................................................
.....................................................PLEASE WAIT.
MEMBERS SYNCING IMAGE TO FLASH. DO NOT SWITCH OVER OR POWER DOWN THE UNIT...
TFTP to Flash Done
```

The following example shows an image download using zero-touch provisioning. Zero-touch provisioning does not display the topology diagram. It displays some messages and syslog entries.

```
Zero-touch discovers 1 chain (valid#= 1)
Note: must download images to 4 new unit(s): #17,21,28,32
SYSLOG: <14> Apr 14 01:06:21 ZTP: zero-touch-enable detects total 1 chains (6 units). unstable=0,
SYSLOG: <14> Apr 14 01:06:21 ZTP: Zero-touch discovers 1 chain (valid#= 1)
SYSLOG: <14> Apr 14 01:06:21 System: Image mismatch Auto Copy Started for primary image for units 17 21 28
32
Load to buffer (8192 bytes per dot)
.....................................................................................................
.....................................................................................................
.....................................................................................................
.....................................................................................................
```

```
.....................................................................................................
.....................................................................................................
.....................................................................................................
.....................................................................................................
.....................................................................................................
.....................................PLEASE WAIT.
MEMBERS SYNCING IMAGE TO FLASH. DO NOT SWITCH OVER OR POWER DOWN THE UNIT...
TFTP to Flash Done
SYSLOG: <14> Apr 14 01:09:19 ZTP: Send reload to chain 0
```

The following examples illustrate SPX interactive-setup and zero-touch provisioning behavior when the TFTP server is not configured.

SPX interactive-setup

```
Snipped …
You selected 6 unit(s): #1: ID=17, #2: ID=18, #3: ID=21, #4: ID=28, #5: ID=29, #6: ID=32,
            #1            #2            #3            #4            #5
          +----+        +----+        +----+        +----+        +----+
1/1/5==3/1| 17 |2/1==2/1| 18 |2/3==2/1| 21 |2/5==2/5| 28 |2/1==2/5| 29 |2/1=
          +----+        +----+        +----+        +----+        +----+   |
                                                                    #6     |
                                                                  +----+   |
                                                       2/1/9--4/1| 32 |2/1=
                                                                  +----+
Proceeding will produce the above topology. (*** NOTE: #1 #3 #4 has different image) Do you accept it?
(enter 'y' or 'n'): y
spx interactive-setup discovers 1 chain (valid#= 1, selected#= 1)
Detects 3 units running different images but "tftp-server" is not configured.
You can abort (y) or proceed (n) without downloading images: (enter 'y' or 'n'): y
Exit spx interactive-setup, reason: User aborts
```

Zero-touch provisioning

Zero-touch provisioning runs in background. It does not display any topology diagrams. However, it prints messages and syslog entries.

```
Zero-touch discovers 1 chain (valid#= 1)
ZTP detects 3 units running different images, but "tftp-server" is not configured. Abort
SYSLOG: <14> Mar 24 19:59:14 ZTP: zero-touch-enable detects total 1 chains (6 units). unstable=0,
```

Campus Fabric Manual Configuration

- Enabling and configuring the control bridge..... 73
- How PE units join a Campus Fabric domain..... 75
- Manually enabling and configuring PE units.....76
- Campus Fabric detailed manual configuration example.....87

Enabling and configuring the control bridge

To be manually configured, a PE must run a router image because **spx pe-enable** configuration is not available in the switch image. In contrast, Zero-touch deployment and SPX interactive-setup can discover a standalone running either the router or switch image and reload it to a PE.

The following procedure assumes that the core stack of ICX 7750 devices that will become the control bridge (CB) is connected and functioning, and that the ICX 7750 ports to be used as SPX connections have been identified.

NOTE
The following procedure describes CB configuration from a stack. The same procedure can be performed from a standalone ICX 7750. The only restriction is that the same port cannot be configured as a stacking port or trunk and as an SPX port or LAG.

1. In global configuration mode on the active controller for the ICX 7750 stack that will serve as the control bridge (CB), enter the **spx cb-enable** command.

```
ICX7750-26Q Router# configure terminal
ICX7750-26Q Router(config)# spx cb-enable
System is now in 802.1br control bridge (CB) mode.
```

NOTE
The CB must be running LLDP to support a Campus Fabric environment. If LLDP is not already running, it is enabled on SPX ports by the **spx cb-enable** command. Enabling or disabling SPX does not affect LLDP on data ports, and enabling or disabling LLDP on data ports does not affect enabled SPX ports.

NOTE
When spanning tree is configured on the ICX 7750 standalone unit or stack, the **spx cb-enable** command requires a reload. After you enter the command, the system prompts you that spanning tree configuration is present and requires you to confirm the reload before the CB is enabled. CB units but not PE units are reloaded when you confirm. Disabling the CB with the **no spx cb-enable** command also requires a reload if spanning tree configuration is present.

2. Still in global configuration mode on the active controller, use the **spx cb-configure** command to enter CB configuration mode as shown in the following example.

```
ICX7750-26Q Router(config)# spx cb-configure
ICX7750-20Q Router(config-spx-cb)# ?
multi-spx-lag                 Configure two lags of a live link
multi-spx-port                Configure two ports of a live link
pe-id                         PE ID assignment provision
spx-lag                       Configure one CB lag
spx-port                      Configure one or more CB ports
zero-touch-enable             actively send probe
zero-touch-ports              Configure zero touch ports
```

3. Use the **spx-port** command followed by an appropriate port number and an optional group name to designate a port that will be used to connect to attached PE units.

   NOTE
   The **pe-group** *name* option appears in SPX show commands and can be included as a PE port identifier in the **spx pe-id** command.

   The following example creates an SPX port on CB unit 1.

   ```
   ICX7750-26Q Router(config-spx-cb)# spx-port 1/1/10
   ```

   The following example creates an SPX port on CB unit 2 and gives it a group name.

   ```
   ICX7750-26Q Router(config-spx-cb)# spx-port 2/1/1 pe-group bldg1-stk7
   ```

4. Configure CB LAGs (trunks) as needed. Use the **spx-lag** command followed by an appropriate port range and an optional group name to designate the CB LAG.

   NOTE
   An SPX LAG can contain from 2 through 16 ports. ICX 7750 CB units, ICX 7450 PE units, and ICX 7250 PE units support a maximum of 16 ports in an SPX LAG. ICX 7150 PE units support a maximum of 8 ports.

   NOTE
   The rules governing LAG ranges in conjunction with port lists are covered in Differences in Campus Fabric configuration practices on page 42.

   The following example creates one end of a two-port SPX LAG on CB unit 2.

   ```
   ICX7750-26Q Router(config-spx-cb)# spx-lag 2/1/10 to 2/1/11
   ```

   The following example creates one end of a two-port CB LAG. The LAG includes ports from CB unit 2 and CB unit 3.

   ```
   ICX7750-26Q Router(config-spx-cb)# spx-lag 2/1/10 to 2/1/11 3/1/10
   ```

   The following example creates one end of a CB LAG. The trunk is given a group name.

   ```
   ICX7750-26Q Router(config-spx-cb)# spx-lag 3/1/3 to 3/1/5 pe-group bldg1-finance
   ```

Adding a reserved PE configuration on the CB

PE unit configuration present in the CB active controller before the corresponding PE unit joins the CB is called reserved PE configuration.

NOTE
It is not necessary to configure a reserved PE configuration for a PE to join. The CB learns module and SPX port or LAG information from the PE if the assigned ID has no reserved configuration.

You can create PE configuration on the CB to be applied later to a joining PE unit. You must specify an SPX unit number and the ICX 7150, ICX 7250, or ICX 7450 modules that match the new PE unit.

When you configure a reserved PE unit on the CB, the system does not generate any SPX ports by default. The system learns SPX ports or LAGs from the PE unit when it joins. If you configure SPX ports or LAGs as part of a reserved unit, the CB will push your port or LAG configuration to the PE unit when it joins, after checking that the SPX port or LAG configuration will not break its connection with the PE.

NOTE
PE ID assignment is based on the **pe-id** configuration under the **spx cb-configure** command. If the joining PE port does not match any **pe-id** configuration, it is assigned its old ID if it is available. If the joining unit has no old ID or the old ID is not available, it is assigned an unused ID.

The following example shows SPX unit 20 being created on the CB as a reserved configuration.

```
ICX7750-20Q Router# configure terminal
ICX7750-20Q Router(config)# spx unit 20
ICX7750-20Q Router(config-spx-unit-20)# module 1 ?
  icx7450-24-port-management-module
  icx7450-24p-poe-port-management-module
  icx7450-32zp-poe-management-module
  icx7450-48-port-management-module
  icx7450-48f-sf-port-management-module
  icx7450-48p-poe-management-module
ICX7750-20Q Router(config-spx-unit-20)# module 1 icx7450-48-port-management-module
ICX7750-20Q Router(config-spx-unit-20)# module 2 ?
  icx7400-sfp-4port-4g-module
  icx7400-xgc-4port-40g-module
  icx7400-xgf-4port-40g-module
ICX7750-20Q Router(config-spx-unit-20)# module 2 icx7400-xgf-4port-40g-module
```

Once you have configured a reserved PE unit, you can verify your configuration by entering the **show running-config** command. Configured modules are listed, along with SPX ports or LAGs, if any. SPX unit 20 configuration, a reserved PE configuration, is displayed after stack unit configuration. The following example shows no SPX ports. SPX ports or LAGs will be learned and added to the configuration when a matching PE joins the CB.

```
ICX7750-20Q Router(config-spx-unit-20)# show running-config

Current configuration:
!
ver 08.0.40b1T203
!
stack unit 1
  module 1 icx7750-20-qxg-port-management-module
  module 2 icx7750-qsfp-6port-qsfp-240g-module
  module 3 icx7750-6q-6port-qsfp-240g-module
  priority 128
  stack-trunk 1/2/4 to 1/2/5
  stack-port 1/2/1 1/2/4
stack unit 2
  module 1 icx7750-20-qxg-port-management-module
  module 2 icx7750-qsfp-6port-qsfp-240g-module
  module 3 icx7750-6q-6port-qsfp-240g-module
  stack-trunk 2/2/1 to 2/2/2
  stack-trunk 2/2/4 to 2/2/6
  stack-port 2/2/1 2/2/4
spx unit 20
  module 1 icx7450-48-port-management-module
  module 2 icx7400-xgf-4port-40g-module
stack enable
stack mac 748e.f8f9.6300
!
```

How PE units join a Campus Fabric domain

A PE unit cannot join a CB unless the CB has been enabled. Refer to Enabling and configuring the control bridge on page 73.

PE discovery starts when a link is detected on a CB or PE port with a potential link to another PE-capable unit. Each PE unit has two reconfigurable SPX ports or LAGs over which LLDP exchanges messages with the CB. When a port in a standalone CB or a CB stack receives a join (LLDP Port-Extension) request from the SPX ports or LAGs of a potential PE unit, the connection process is initiated. When an SPX port on a PE is configured as part of a PE trunk, the join request is sent on all ports in the trunk.

During a PE join, the following PE information is sent to the CB and stored as unit configuration:

- Module information
- Ports on which the PE is joining
- SPX ports
- SPX LAGs
- Software image version

How the CB applies a reserved configuration

If the CB has a reserved PE configuration for the same PE ID that does not match the physical configuration of the joining PE, the following scenarios result in different actions:

- The modules are different (for example, the PE has a 24-port base module, and the reserved configuration has a 48-port module). The joined PE is put into a nonoperational state. The user can configure the **no spx unit** *number* command to remove the reserved configuration, and the CB learns the PE properly.
- The PE has extra modules. The CB learns the extra modules.
- The reserved PE configuration has extra modules. The CB keeps the extra modules.
- The reserved PE configuration has different SPX ports or LAGs from the PE. The CB uses the reserved PE configuration and pushes it to the PE, but if reserved PE configuration might break connections, the CB learns the physical connections.

If the PE unit has no reserved configuration

After a PE joins, if the assigned PE ID does not have a reserved configuration, the CB creates an **spx unit** *number* configuration that contains the PE module along with SPX port and LAG information. The information is retained in memory unless the user enters the **write memory** command on the CB to save the configuration to the startup configuration file.

If the PE unit has a different software image

The CB checks the software image version to make sure the CB and the PE unit are running compatible images. If the PE unit is running a different image version, it is put in a nonoperational state. The CB can copy the correct image to a nonoperational unit. Refer to Campus Fabric (SPX) image upgrade on page 121 for more information.

Manually enabling and configuring PE units

The following procedure requires an ICX 7150, ICX 7250, or ICX 7450 unit with a router image that has stacking disabled (**no stack enable** configuration) and that is properly connected to an enabled control bridge (CB).

The following steps are involved in configuring PE units.

- Enable the PE unit.
- Configure SPX ports, if necessary, to change the ports for setting up LLDP communications with the CB.
- Configure SPX LAGs as needed.
- Save and load the configuration.

NOTE
For information on PE ring formation, refer to Best practices for PE ring configuration on page 34.

NOTE
For information on automatic configuration of PE units, refer to Zero-touch configuration on page 53. For information on automated interactive configuration of PE units, refer to SPX interactive-setup on page 58.

1. To enable an ICX 7150, ICX 7250, or ICX 7450 unit as a PE unit, enter the **spx pe-enable** command on the unit in global configuration mode.

```
ICX7450-48F Router# configure terminal
ICX7450-48F Router(config)# spx pe-enable
Enter provisional PE mode. CLI is limited to spx unit 1.
After finishing all configuration, please "write memory" and reload this unit to be a PE.
```

   The unit switches immediately from regular mode to Provisional-PE mode. The global configuration prompt changes to include the prefix [Provisional-PE].

2. Confirm that the PE is enabled by entering the **show running-config** command.

```
[Provisional-PE]ICX7450-48F Router(config)# show running-config
Current configuration:
!
ver 08.0.40b1T213
!
spx pe-enable
spx unit 1
module 1 icx7450-48f-sf-port-management-module
module 2 icx7400-xgf-4port-40g-module
module 3 icx7400-xgf-4port-40g-module
module 4 icx7400-qsfp-1port-40g-module
spx-port 1/2/1
spx-port 1/2/3
!
!
```

   The unit is shown as enabled and its SPX configuration is shown as spx unit 1 (the local designation for the new PE unit). In the previous example, the system has provisionally configured ports 1/2/1 and 1/2/3 as SPX ports.

   NOTE
   An ICX 7450 provisionally configured as a PE contains system-generated SPX ports 1/2/1 and 1/2/3 for a 4 X 10-Gbps module. These ports can be reconfigured as shown in the following steps. Refer to SPX port and LAG configuration rules on page 82 for more information on system-generated SPX ports.

3. (Optional) Designate a suggested PE ID with the **spx suggested-id** command.

```
[Provisional-PE]ICX7450-48F Router(config)# spx suggested-id 20
```

   NOTE
   Allowable PE IDs are 17 through 56.

   NOTE
   The **spx suggested-id** command is not available on the CB. It can be entered only in Provisional-PE or PE mode.

   NOTE
   The suggested ID entered cannot be assigned if the CB receives other configuration information for the PE. The suggested ID is not assigned if it is already assigned to another unit or if it is present in another PE ID configuration.

4. Enter SPX unit configuration mode.

```
[Provisional-PE]ICX7450-48F Router(config)# spx unit 1
[Provisional-PE]ICX7450-48F Router(config-spx-unit-1)#
```

5. Configure SPX ports if necessary.

   In the following example, one of the default SPX ports is removed, and another SPX port is created.

```
[Provisional-PE]ICX7450-48F Router(config-spx-unit-1)# no spx-port 1/2/3
spx-port 1/2/3 is removed.
[Provisional-PE]ICX7450-48F Router(config-spx-unit-1)# spx-port 1/2/4
```

6. Configure SPX LAGs for the PE unit if needed.

   In the following example, the default SPX port 1/2/1 becomes part of a two-port LAG.

```
[Provisional-PE]ICX7450-48F Router(config-spx-unit-1)# spx-lag 1/2/1 to 1/2/2
```

7. Assign or change the PE name if needed.

   In the following example, the PE unit is named "finance".

```
[Provisional-PE]ICX7450-48F Router(config-spx-unit-1)# pe-name finance
```

8. If the CB has jumbo mode configured, you can configure jumbo mode on a provisional PE to avoid one extra reload after the PE reloads and joins the CB. (If either the CB or PE has jumbo mode configured and the other does not, the PE is reloaded after it joins the CB. When it boots up, it joins the CB again and has the same jumbo mode configuration as the CB.)

   The following example configures jumbo mode on a provisional PE.

```
[Provisional-PE]ICX7450-48F Router(config)# spx unit 1
[Provisional-PE]ICX7450-48F Router(config-spx-unit-1)# jumbo
[Provisional-PE]ICX7450-48F Router(config-spx-unit-1)# show running-config
Current configuration:
!
ver 08.0.40b1T213
!
spx pe-enable
spx unit 1
  module 1 icx7450-48f-sf-port-management-module
  module 2 icx7400-xgf-4port-40g-module
  module 4 icx7400-qsfp-1port-40g-module
  spx-port 1/2/1
  spx-port 1/2/3
!
jumbo
!
end
```

9. Check your completed configuration with the **show running-config** command.

   The following example shows the new configuration, which has yet to be saved and loaded.

```
[Provisional-PE]ICX7450-48F Router(config-spx-unit-1)# show running-config
Current configuration:
!
ver 08.0.40b1T213
!
spx pe-enable
spx suggested-id 20
pe-name finance
spx unit 1
module 1 icx7450-48f-sf-port-management-module
module 2 icx7400-xgf-4port-40g-module
module 4 icx7400-qsfp-1port-40g-module
spx-lag 1/2/1 to 1/2/2
spx-port 1/2/4
!
!
```

10. Enter the **write memory** command to save the new configuration to the PE startup file.

```
[Provisional-PE]ICX7450-48F Router(config-spx-unit-1)# exit
[Provisional-PE]ICX7450-48F Router(config)# exit
[Provisional-PE]ICX7450-48F Router# write memory
```

11. Enter the **reload** command to reboot the system with the new configuration.

```
[Provisional-PE]ICX7450-48F Router# reload
Are you sure? (enter 'y' or 'n'): y
Sent SIGKILL to all processes
Requesting system reboot
Restarting system.
```

    The unit moves from Provisional-PE mode to PE mode. Then, if a connected CB is enabled, it becomes an active PE. The CB takes control of the PE and may assign a different unit ID.

The transition from provisional to active PE unit under CB control is shown in the following example. As indicated in the example, the PE is assigned a new unit ID, a new name, and a different SPX LAG, based on reserved configuration information stored on the CB.

```
Ruckus Wireless Bootloader: 10.1.06b002T215 (Sep 10 2015 - 06:30:05)

Validate Shmoo parameters stored in flash ..... OK
Restoring Shmoo parameters from flash .....
Running simple memory test ..... OK
 ICX7450-48 Copper (POE), PVT1
SYS CPLD VER: 0x10, Released Ver: 0

Enter 'b' to stop at boot monitor:  0
bootdelay: ===
Booting image from Primary
................................................................................................
................................................................................................
................................................................................................
...## Booting kernel from Legacy Image at 70000200 ...
   Image Name:   Image
ARM Linux Kernel Image (gzip compressed)
   Data Size:    24091093 Bytes =    Load Address: 61008000
   Entry Point:  61008000
   Verifying Checksum ... OK
   Uncompressing Kernel Image ... OK
```

The kernel is started, factory defaults are applied, and the device is initialized as a PE.

```
Starting kernel ...

SP's eUSB-Infra Called
 Number of eUSB partitions 3 ...
PLATFORM SP
Config partition mounted.
eUSB flash drive is ready
No External USB Drive(s) Mounted .
Creating TUN device
Starting the FastIron.
FIPS Disabled:PORT NOT DISABLED
platform type 73
OS>can't set date/time beyond year {2037} .

                                          Applying factory defaults..
set_board_level: gi_board_type = 101
System is booting up in PE mode: Jumbo frame is enabled.
SOC unit 0 attached to PCI device BCM56548_A0
u=0 p=50 Using SDK PHY driver for BCM84756/7/9
u=0 p=51 Using SDK PHY driver for BCM84756/7/9
Initializing the parallel detect
Setting the CMIC registers for the lINK SCAN
SOC unit 1 attached to PCI device BCM56548_A0
u=1 p=42 Using SDK PHY driver for BCM84756/7/9
u=1 p=43 Using SDK PHY driver for BCM84756/7/9
Initializing the parallel detect
Setting the CMIC registers for the lINK SCAN
Pre Parsing Config Data ...

sw_pp_device_map_init -> PE INIT
PE Unit:  No BCM L3 Initialization
PE Unit: Skipping  CPU next Hop creation
PE Unit: Skipping create nextHop drop
PE Unit: Not initing Ingress interfaces ...
Hotplugger Daemon Initialized ..
PE Unit: Skipping create nextHop drop
bootup in PE mode, enable "lldp run"
bootup in PE mode, enable processing of tagged LLDP packets
System initialization completed...console going online.
  Copyright (c) 1996-2015 Ruckus Wireless, Inc. All rights reserved.
    UNIT 1: compiled on Nov  2 2015 at 02:36:32 labeled as SPR08040b739
      (24091669 bytes) from Primary SPR08040b739.bin
        SW: Version 08.0.40b739T213
      Compressed Boot-Monitor Image size = 786944, Version:10.1.06T215 (spz10106b002)
       Compiled on Thu Sep 10 13:30:24 2015

  HW: Stackable ICX7450-48-HPOE
  Internal USB: Serial #: 9900614101400089
      Vendor: ATP Electronics, Total size = 1919 MB
```

Information on each port and module in the unit displays.

```
==========================================================================
UNIT 1: SL 1: ICX7450-48P POE 48-port Management Module
      Serial  #:CYR3347K00J
      License: ICX7450_L3_SOFT_PACKAGE   (LID: eatIIJMmFFl)
      License Compliance: ICX7450-PREM-LIC-SW is Compliant
      P-ASIC  0: type B548, rev 01  Chip BCM56548_A0
==========================================================================
UNIT 1: SL 2: ICX7400-4X10GF 4-port 40G Module
      Serial  #:CYV3347K0A6
==========================================================================
UNIT 1: SL 3: ICX7400-1X40GQ 1-port 40G Module
      Serial  #:CYX3346K0J1
==========================================================================
UNIT 1: SL 4: ICX7400-1X40GQ 1-port 40G Module
      Serial  #:CYX3346K0NA
==========================================================================
 1000 MHz ARM processor ARMv7 88 MHz bus
 8192 KB boot flash memory
 2048 MB code flash memory
 2048 MB DRAM
STACKID 1  system uptime is 53 second(s)
The system : started=warm start   reloaded=by "reload"
Bootup role: Port Extender (PE)

[PE]ICX7450-48P Router>T=53.9: spx-port 1/2/4 goes up


[PE]ICX7450-48P Router>T=55.9: spx-lag 1/1/1 goes up
T=56.0: spx-lag 1/1/2 goes up

Power supply 2  detected.
Power supply 2  is up.
PoE Info: Adding new 54V capacity of 748000 mW, total capacity is 748000, total free capacity is 748000
PoE Info: PoE module 1 of Unit 1 on ports 1/1/1 to 1/1/48 detected. Initializing....
PoE Event Trace Log Buffer for 2000 log entries allocated
PoE Event Trace Logging enabled...
T=1m6.3: This unit is assigned an ID 17 by CB u1.
T=1m20.7: Spx unit 17 becomes READY.
Enabling All Non-spx ports on PE unit 17
```

The prompt changes to indicate the unit is a PE unit.

```
[PE]local-17@ICX7450-48P Router>        <-- Prompt changes to [PE]local-18.
[PE]local-17@ICX7450-48P Router> enable
No password has been assigned yet...
!
!
[PE]local-18@ICX7450-48F Router#
[PE]local-18@ICX7450-48F Router#
[PE]local-18@ICX7450-48F Router# configure terminal
"configure term" is not allowed because this PE is managed by the CB unit 1.
If you want to make configuration change, please do it from the CB unit 1 console.
If you want to reload this PE to be a regular device, please do "spx unconfigure me" from the local
console, or do "spx unconfigure 18"
from the CB's console.
[PE]local-18@ICX7450-48F Router#
[PE]local-18@ICX7450-48F Router# write memory
"write memory" is not allowed because this PE is managed by the CB unit 1.
If you want to make configuration change, please do it from the CB unit 1 console.
If you want to reload this PE to be a regular device, please do "spx unconfigure me" from the local
console, or do "spx unconfigure 18" from
the CB's console.
[PE]local-18@ICX7450-48F Router#
```

You can verify the configuration with show commands.

```
[PE]local-18@ICX7450-48F Router# show running-config
Current configuration:
!
ver 08.0.40b1T213
!
spx pe-enable
spx unit 18     <-- assigned unit 18
pe-name bldg2-floor2-stk18     <-- pushed from CB config
module 1 icx7450-48f-sf-port-management-module
module 2 icx7400-xgf-4port-40g-module
module 4 icx7400-qsfp-1port-40g-module
spx-lag 18/1/10 to 18/1/11     <-- pushed from CB config
spx-port 18/2/4
!
[PE]local-18@ICX7450-48F Router# show int brief
==== interface representation changes from 1/x/y to 18/x/y ======
Port Link State Dupl Speed Trunk Tag Pvid Pri MAC Name
18/1/1 Down None None None None No 1 0 cc4e.246c.f190
18/1/2 Down None None None None No 1 0 cc4e.246c.f191
18/1/3 Down None None None None No 1 0 cc4e.246c.f192
<snip>
18/1/47 Down None None None None No 1 0 cc4e.246c.f1be
18/1/48 Down None None None None No 1 0 cc4e.246c.f1bf
18/2/1 Up Forward Full 10G None No 1 0 cc4e.246c.f1c1
18/2/2 Up Forward Full 10G None No 1 0 cc4e.246c.f1c2
18/2/3 Up Forward Full 10G None No 1 0 cc4e.246c.f1c3
18/2/4 Up Forward Full 10G None No 1 0 cc4e.246c.f1c4
18/4/1 Up Forward Full 40G None No 1 0 cc4e.246c.f1c9
mgmt1 Up None Full 1G None No None 0 cc4e.246c.f190
```

SPX port and LAG configuration rules

Unlike a stacking unit that has two factory default ports, PE units do not have predetermined default ports. However, a PE cannot join a CB without an SPX port or LAG running LLDP. SPX ports and LAGs are either configured by the user as part of a reserve configuration stored on the CB, or the system learns the port and LAG configuration from the PE unit when the PE joins the Campus Fabric domain.

The following rules apply if the reserve PE configuration on the CB differs from the PE configuration learned from the PE unit:

- If the reserve configuration contains no SPX port or LAG, the CB learns the SPX port and LAG configuration from the PE unit.
- If the reserve configuration on the CB contains SPX ports or LAGs, the CB pushes its SPX port and LAG configuration to the PE unit, after first checking that the PE unit will still be reachable once the configuration changes.

  NOTE
  PE units further downstream are not guaranteed to remain reachable after the reserve configuration is pushed to the PE unit.

When the **spx pe-enable** command is entered locally on an ICX 7150, ICX 7250, or ICX 7450, the system generates two SPX ports as part of configuring the device as a provisional PE unit. The system applies the following rules to generate the SPX ports, based on the modules installed in the unit. The first rule has priority over the second rule.

1. If an ICX 7450 has any 4 X 10-Gbps ports, the system generates SPX port 1/x/1 and SPX port 1/x/3, where "x" is the slot number of the 4 X 10-Gbps module. If there are multiple 4 X 10-Gbps modules, the SPX ports are configured in the slot with the lowest number.
2. If an ICX 7450 has any 40-Gbps modules, the system designates up to two 40-Gbps ports as SPX ports.

3. If no 4 X 10-Gbps or 40-Gbps modules are present in the ICX 7450, the system does not generate any SPX ports for the unit.

The user can change the system-generated SPX ports locally while the PE is in Provisional-PE mode.

Configuration changes in PE mode before joining the CB

When the system reboots after you save and reload a Provisional-PE configuration on an ICX 7150, ICX 7250, or ICX 7450 unit, the unit changes from Provisional-PE mode to PE mode. The change in status is visible in the device prompt.

The prefix [Provisional-PE] appears in front of the device prompt for a provisional PE.

```
[Provisional-PE]ICX7450-48F Router# reload
```

The prefix [PE] appears in front of the device prompt when the device enters PE mode.

```
[PE]ICX7450-48F Router#
```

When a PE is not part of a CB, you can still make and save SPX configuration changes.

NOTE
When a PE loses its CB, it displays the following message, and you can again enter PE configuration mode:

```
T=5m21.2: Spx unit 19 is no longer managed by CB u2 (reason=uplink down).
```

NOTE
When a unit boots in PE mode but is not yet attached to the CB, all non-SPX ports on the PE are down, but SPX ports are up. When a PE unit loses its CB, all non-SPX ports on the PE are brought down.

When the PE unit joins a CB, it is assigned an ID. The prefix of the device prompt changes to include the word "local" and the assigned ID.

```
[PE]local-17@ICX7450-48F Router#
```

A PE that is managed by a CB can no longer issue SPX or **write memory** commands. However, the controlled PE can still issue certain commands as described in Regular, provisional-PE, and PE mode on page 83.

Regular, Provisional-PE, and PE mode

In regular mode, a standalone ICX 7150, ICX 7250, or ICX 7450 unit behaves like a normal routing or switching device. In Provisional-PE or PE mode, the device operates differently and has different commands available to it.

Provisional-PE mode

Provisional-PE mode allows a regular ICX 7150, ICX 7250, or ICX 7450 router to configure PE mode without affecting any router configuration. Typically, a unit boots up in regular mode and operates like a regular device. An ICX 7150, ICX 7250, or ICX 7450 unit enters Provisional-PE mode after the user configures the **spx pe-enable** command but has not reloaded the unit. The unit still acts like a regular switch or router. Most commands, including configuration commands, are blocked as they are in PE mode.

A unit in Provisional-PE mode cannot send or receive stacking packets such as topology probes. It cannot perform secure setup or unit replacement.

A unit in Provisional-PE mode has the same user interfaces as a unit in PE mode. For example, a unit in Provisional-PE mode still does MAC learning or runs OSPF protocols; however, the user cannot execute the **show mac** or **show ip route** commands. The **show running-config** command shows the PE configuration only.

A unit in Provisional-PE mode can enter regular mode immediately when the **no spx pe-enable** command is entered. Any previous runtime configuration is restored as if nothing has happened. The **show running-config** command shows the restored configuration.

When a unit enters Provisional-PE mode the first time, the **show running-config** command displays the unit as spx unit 1 with the default configuration. The user can execute the **spx-port**, **spx-lag**, and **pe-name** commands. Changing from regular mode to Provisional-PE mode after the first time restores the previous PE configuration.

PE mode

A unit boots up in PE mode and operates as a dummy device. It does not parse the startup-config file when it boots up. The unit runs protocols, such as LLDP, available to a PE unit. It does not perform local switching. Most commands, including configuration commands, are blocked.

After a PE receives its assigned ID, it cannot run the **configure terminal** command. If the unit is in configuration mode, it exits configuration mode. The **configure terminal** command is unblocked when the PE unit is no longer joined to a CB. This state is indicated by an "spx-port/lag down" status or by CB keep-alive aging.

The runtime configuration displayed by the **show running-config** command differs in regular mode and PE mode. The **show running-config** command shows the PE configuration only.

NOTE
A unit in regular mode can never reload to PE mode, for example, after you execute a reload or after a power failure occurs. Only Provisional-PE mode can reload a unit to PE mode.

PE mode cannot change to Provisional-PE mode or regular mode. There are several ways to recover a PE unit to regular mode:

- If the PE is not managed by the CB, disable SPX with the **no spx-enable** command and then enter the **write memory** command followed by the **reload** command.
- If the PE is managed by the CB, on the CB, enter the **spx unconfigure unit-id** *id* command to reload the PE to standalone mode. Here, *id* is the PE ID for the unit.
- If a group of PEs is managed by the CB, on the CB, enter the **spx unconfigure unit-id** *id* command and specify a range of IDs, a series, or both. Use no spaces in the ID string. For example, **spx unconfigure unit-id** *23-27,30,35,40-43* returns PE units 23, 24, 25, 26, 27, 30, 35, 40, 41, 42, and 43 to regular mode.
- Issue the **spx unconfigure me** command on the PE unit.

Unit operating mode comparison

The following table describes differences in capabilities for an ICX 7150, ICX 7250, or ICX 7450 unit in regular, Provisional-PE, and PE modes.

TABLE 9 Differences in operating modes

Prompt or command	Regular mode	Provisional-PE mode	PE mode
Device prompt	Device_type-role# For example, `ICX7450-48F Router#`	`[Provisional-PE]ICX7450-48F Router#`	`[PE]local-17@ICX7450-48F Router#`
Commands available	All permitted commands are available, including stacking commands when stacking is enabled.	These commands are available: **configure terminal**, SPX unit configuration options, **write memory**, **reload**, **spx unconfigure**, **show configuration**, and **show startup-config**.	These commands are available: **configure terminal**, SPX unit configuration options, **write memory**, **reload**, **spx unconfigure**, **show configuration**, and **show startup-config** .

TABLE 9 Differences in operating modes (continued)

Prompt or command	Regular mode	Provisional-PE mode	PE mode
write memory	The **write memory** command writes to the startup configuration file for regular mode. If this unit has any attached PE units, it sends a message to all of them to write to the PE startup file.	The **write memory** command writes to the PE startup file. It gives a warning message if the configuration contains no SPX ports or SPX LAGs.	The **write memory** command writes to the PE startup file if the PE unit has not joined a CB. Once the PE unit joins a CB, the **write memory** command is blocked. When the CB executes the **write memory** command, the PE unit writes to the PE startup file.

reload	In regular mode, the switch or router can only reload to switch or router mode. A reload can occur intentionally when the user enters the **reload** command, or unintentionally, for example, following a power drop.	A provisional PE can only reload PE mode. When the **reload** command is executed on a provisional PE, the system does two things:
		1. It checks whether the PE startup file has **spx pe-enable** configured. If the file does not exist or **spx pe-enable** is not configured in the file, the system blocks the command:
		[Provisional-PE]ICX7450-48F Router# reload
		`Error! provisional PE can only reload to PE mode, but boot file has no "spx pe-enable".`
		`Please do "write memory" and try again, or "no spx pe-enable" to go back to switch/ router mode.`
		2. It compares the current configuration and the startup file. If they are different, the system prints the following message:
		[Provisional-PE]ICX7450-48F Router# reload
		`Are you sure? (enter 'y' or 'n'): y`
		`Running Config data has been changed. Do you want to continue the reload without saving the running config? (enter 'y' or 'n'): n`
		`Please save the running config and try reload again`
		If you change the device back to router mode with the **no spx pe-enable** command, the system immediately removes the **spx pe-enable**
			A unit in PE mode can reload to PE mode or router mode depending whether it has **spx pe-enable** configured in the PE startup file. There are two ways to reload a PE to switch or router mode locally from the console of a PE not controlled by a CB:
			1. After removing the **spx pe-enable** configuration in PE mode, the user can execute the **write memory** command and then the **reload** command. The system still retains the PE startup file, which contains other information, such as the SPX port and LAG configuration. If the user wants to change from router mode to Provisional-PE mode by entering the **spx pe-enable** command, all the SPX port and LAG configuration is restored.
			2. The **spx unconfigure** command can be entered from the CB or the PE unit to remove the PE startup file and reload the PE unit as a router. The command removes all SPX port and LAG information.

TABLE 9 Differences in operating modes (continued)

Prompt or command	Regular mode	Provisional-PE mode	PE mode
		configuration from the PE startup file. Other contents in the file are kept. This is to prevent a router from accidentally reloading as a PE.	
rconsole	The **rconsole** command can be used to access a PE unit.	The **rconsole** command is not available.	The **rconsole** command can be used to access the CB.
show configuration	The **show configuration** command shows the startup-configuration file used in regular mode bootup.	The **show configuration** command shows the PE startup file used in PE mode bootup.	The **show configuration** command shows the PE startup file used in PE mode bootup.
show running-config	The **show running-config** command shows the current running configuration.	The **show running-config** command shows the running configuration the unit would have if it were reloaded and operating in PE mode.	The **show running-config** command shows the current running configuration.
show startup-configuration	Command not available.	The **show startup-configuration** command shows the startup-configuration file used in regular mode bootup.	The **show startup-configuration** command shows the startup-configuration file used in regular mode bootup.
spx unconfigure me	The **spx unconfigure** command can be used from the CB to unconfigure a PE unit; however, **spx unconfigure me** is not available from the CB.	The **spx unconfigure me** command removes the PE startup file, but the unit does not reload.	The **spx unconfigure me** command removes the PE startup file. The user is prompted to confirm the command before it is run. The command removes the PE startup file and reloads the unit as a standalone device.

Dynamic versus static SPX configuration

A static PE unit has saved configuration in startup configuration flash. The PE unit continues to exist if the system reloads. A PE unit with dynamic configuration does not have its configuration stored in startup flash. Consequently, the dynamically configured PE configuration is removed when the system reloads.

For example, when PE 18 joins a CB and the CB does not have a reserved configuration for SPX unit 18, the CB generates a new configuration. The PE is a dynamic PE unit until the configuration is saved to startup flash. If SPX unit 18 leaves the system before its configuration is saved, the CB removes SPX unit 18 configuration.

You can change the configuration of an SPX port or LAG for a dynamically learned PE unit. The system changes the unit from dynamic to static. If the PE unit leaves the Campus Fabric domain, the system retains the static configuration. When you change the configuration of a dynamic unit (that is, a unit whose configuration has not been saved to startup flash), the system keeps your changes as part of the dynamic configuration. As a result, if the PE unit leaves and rejoins the Campus Fabric domain, you do not need to modify the configuration again. A static configuration is retained when the unit leaves the domain; however, it may still be lost after a reload if you have not saved it by using the **write memory** command.

In Provisional-PE mode or in PE mode before the unit joins a CB, you can enter the **write memory** command to save the configuration as a static configuration in the PE startup file. Once the PE unit has joined a CB, the **write memory** command can be entered only from the CB. When the CB runs the **write memory** command, it sends a message to the PE unit that causes it to save the configuration in the PE startup file.

The **show spx** command identifies static ("S") and dynamic ("D") PE units. If a dynamic PE unit leaves the Campus Fabric domain, the unit is no longer present in command output. In contrast, if a PE unit with a static configuration leaves the domain, its

configuration is still displayed in **show spx** command output, and its status is indicated as "Reserve." The following example shows one reserved PE configuration that has previously been saved (unit 17) and one dynamic PE unit (unit 18).

```
ICX7750-26Q Router# show spx
T=3h16m53.6: alone: standalone, D: dynamic cfg, S: static
ID   Type          Role    Mac Address    Pri State  Comment
1  S ICX7750-20QXG active  cc4e.2438.7280 0  local   Ready
2  S ICX7750-20QXG member  0000.0000.0000 0  reserve
3  S ICX7750-20QXG standby 748e.f8f9.6300 0  remote  Ready
17 S ICX7450-24G   spx     0000.0000.0000 0  reserve
18 D ICX7750-20QXG spx     cc4e.2438.7500 0  remote  Ready
active standby
+---+        +---+
| 1 |2/4--2/1| 3 |
+---+        +---+
          +----+
1/2/1--2/4| 18 |1/10=
          +----+
```

Campus Fabric detailed manual configuration example

The following examples show the configuration steps performed from the CB and the PE, detailing how the PE transitions between modes, and the output displayed when the PE joins a CB.

CB configuration

The following example shows a CB and PE unit configuration. The first segment shows the running configuration, including a stack of two ICX 7750 units.

```
ICX7750-26Q Router> en
!
ICX7750-26Q Router# show running-config
Current configuration:
!
ver 08.0.40b1T203
!
stack unit 1
  module 1 icx7750-20-qxg-port-management-module
  module 2 icx7750-qsfp-6port-qsfp-240g-module
  module 3 icx7750-6q-6port-qsfp-240g-module
  stack-port 1/2/4
stack unit 2
  module 1 icx7750-20-qxg-port-management-module
  module 2 icx7750-qsfp-6port-qsfp-240g-module
  module 3 icx7750-6q-6port-qsfp-240g-module
  stack-port 2/2/4
stack enable
stack mac cc4e.2438.7280
!
!
```

The following segment shows available options for SPX in configuration mode on the ICX 7750 core stack (the CB).

```
ICX7750-26Q Router# configure terminal
ICX7750-20Q Router(config)#spx ?
  allow-pe-movement   A PE keeps its ID when moves
  cb-configure        802.1br Control Bridge Configuration: spx-port, spx-lag
  cb-enable           enable CB mode
  unit                configure a pe unit
```

The following segment creates a reserved configuration for SPX unit 18 and then checks the configuration with the **show running-config** command. The reserved configuration for SPX unit 18 appears below the stack unit configuration. No SPX ports are generated automatically for a reserved SPX configuration created on the CB.

```
ICX7750-26Q Router(config)# spx unit 18
ICX7750-26Q Router(config-spx-unit-18)# pe-name bldg2-floor2-stk18
ICX7750-26Q Router(config-spx-unit-18)# module 1 icx7450-48f-sf-port-management-module
ICX7750-26Q Router(config-spx-unit-18)# module 2 icx7400-xgf-4port-40g-module
ICX7750-26Q Router(config-spx-unit-18)# module 4 icx7400-qsfp-1port-40g-module
ICX7750-26Q Router(config-spx-unit-18)# show running-config
Current configuration:
!
ver 08.0.40b1T203
!
spx cb-enable
stack unit 1
  module 1 icx7750-20-qxg-port-management-module
  module 2 icx7750-qsfp-6port-qsfp-240g-module
  module 3 icx7750-6q-6port-qsfp-240g-module
  stack-port 1/2/4
stack unit 2
  module 1 icx7750-20-qxg-port-management-module
  module 2 icx7750-qsfp-6port-qsfp-240g-module
  module 3 icx7750-6q-6port-qsfp-240g-module
  stack-port 2/2/4
spx unit 18
  pe-name bldg2-floor2-stk18
  module 1 icx7450-48f-sf-port-management-module
  module 2 icx7400-xgf-4port-40g-module
  module 4 icx7400-qsfp-1port-40g-module
stack enable
stack mac cc4e.2438.7280
!
```

The following segment shows optional user configuration of an SPX port and an SPX LAG, which is added to the reserved configuration for SPX unit 18. This configuration will be pushed to a PE unit that is assigned this ID when it joins the CB, as long as the new SPX ports do not make the PE unit inaccessible from the CB. In this case, the configuration is accepted as shown in **show running-config** output.

```
ICX7750-26Q Router(config-spx-unit-21)# spx-port 18/2/4
ICX7750-26Q Router(config-spx-unit-21)# spx-lag 18/1/10 to 18/1/11
ICX7750-26Q Router(config-spx-unit-21)# exit
ICX7750-26Q Router(config)# show running-config
Current configuration:
!
!
spx unit 18
  pe-name bldg2-floor2-stk18
  module 1 icx7450-48f-sf-port-management-module
  module 2 icx7400-xgf-4port-40g-module
  module 4 icx7400-qsfp-1port-40g-module
  spx-lag 18/1/10 to 18/1/11
  spx-port 18/2/4
```

The following segment configures the CB. SPX ports and SPX LAGs are created on the CB. Optional PE group names are applied. The group names can be referenced to assign PE IDs from the CB when desired, and they appear in SPX **show** command output.

```
ICX7750-26Q Router(config)# spx cb-config
ICX7750-26Q Router(config-spx-cb)# spx-port 1/1/5 pe-group bld1-fl2-stk5
ICX7750-26Q Router(config-spx-cb)# spx-port 1/1/6
ICX7750-26Q Router(config-spx-cb)# spx-lag 1/1/10 to 1/1/11 pe-group bld1-fl3-stk7
ICX7750-26Q Router(config-spx-cb)# spx-port 1/2/1 pe-group stk_HR
ICX7750-26Q Router(config-spx-cb)# exit
```

The following segment reserves PE ID 18 for a PE that joins on SPX port 1/2/1. It also reserves PE ID 20 for a PE unit that joins on the SPX LAG configured in the previous segment. Notice that a port number is used in the first case, but the PE group name is

used to represent the SPX LAG on which the PE ID of 20 is reserved. The PE group name, the individual SPX port number, or any port in an SPX LAG can be used to represent the same PE ID assignment.

```
ICX7750-26Q Router(config-spx-cb)# pe-id 1/2/1 18
!
ICX7750-26Q Router(config-spx-cb)# pe-id bld1-fl3-stk7 20
!
ICX7750-26Q Router(config-spx-cb)# show running-config
Current configuration:
<snip>

spx unit 18
  pe-name bldg2-floor2-stk18
  module 1 icx7450-48f-sf-port-management-module
  module 2 icx7400-xgf-4port-40g-module
  module 4 icx7400-qsfp-1port-40g-module
  spx-lag 18/1/10 to 18/1/11
  spx-port 18/2/4

stack enable
stack mac cc4e.2438.7280
!
spx cb-enable
spx cb-config
  spx-port 1/1/5 pe-group bld1-fl2-stk5
  spx-port 1/1/6
  spx-lag 1/1/10 to 1/1/11 pe-group bld1-fl3-stk7
  spx-port 1/2/1 pe-group stk_HR
  pe-id stk_HR 18
  pe-id bld1-fl3-stk7 20
```

If a PE unit matching the reserved configuration for SPX unit 18 were to join a CB unit, the following information would be displayed.

```
ICX7750-26Q Router#T=2m27.1: create spx u18, PE-port=18/2/4, CB-port=1/2/1 mac=cc4e.2438.7500, has
provisional config

ICX7750-26Q Router#
ICX7750-26Q Router#T=2m27.5: U1 hotswap spx u18
```

The **show spx** command entered on the CB displays information similar to the following example.

```
ICX7750-26Q Router# show spx
T=3m6.7: alone: standalone, D: dynamic cfg, S: static
ID   Type          Role    Mac Address    Pri State   Comment
1  S ICX7750-20QXG active  cc4e.2438.7280   0 local   Ready
2  S ICX7750-20QXG standby 748e.f8f9.6300   0 remote  Ready
18 S ICX7450-48GF  spx-pe  cc4e.2438.7500 N/A remote  Ready       <-- Reserved configuration
                                                                      has been applied, and
                                                                      PE unit 18 is operational.


    active       standby
     +---+        +---+
     | 1 |2/4--2/1| 2 |
     +---+        +---+

  1/2/1 pe-group bldg1-name3
           +----+
  1/2/1--2/4| 18 |1/10=
           +----+
```

PE configuration

The following example converts an ICX 7450 standalone unit to a PE unit. If stacking is enabled, it must be disabled before the unit can be enabled as a PE.

```
ICX7450-48F Router# configure terminal
ICX7450-48F Router(config)# spx ?
  pe-enable         enable PE mode
  zero-touch-deny   cannot be discovered
ICX7450-48F Router(config)# spx pe-enable
Enter provisional PE mode. CLI is limited to spx unit 1.
After finishing all configuration, please "write memory" and reload this unit to be a PE.
[Provisional-PE]ICX7450-48F Router(config)# show running-config
Current configuration:
!
ver 08.0.40b1T213
!
spx pe-enable
spx unit 1
  module 1 icx7450-48f-sf-port-management-module
  module 2 icx7400-xgf-4port-40g-module
  module 4 icx7400-qsfp-1port-40g-module
  spx-port 1/2/1         |<-- system generates spx-port 1/2/1 and 1/2/3 if module 2 is 4x10G.
  spx-port 1/2/3         |<--
!
!
!
!
End
```

The following segment creates a suggested ID for the new PE unit, which has entered Provisional-PE mode as indicated in the prefix of the command line prompt. The PE ID can be overridden by other configuration information on the CB.

```
[Provisional-PE]ICX7450-48F Router(config)# spx suggested-id 20
[Provisional-PE]ICX7450-48F Router(config)# show running-config
Current configuration:
!
ver 08.0.40b1T213
!
spx pe-enable
spx suggested-id 20
spx unit 1
  module 1 icx7450-48f-sf-port-management-module
  module 2 icx7400-xgf-4port-40g-module
  module 4 icx7400-qsfp-1port-40g-module
  spx-port 1/2/1
  spx-port 1/2/3
!
end
```

The following segment shows optional SPX port and SPX LAG configuration and confirms the running configuration.

```
[Provisional-PE]ICX7450-48F Router(config)# spx unit 1
[Provisional-PE]ICX7450-48F Router(config-spx-unit-1)# spx-lag 1/2/1 to 1/2/2
spx-port 1/2/1 is replaced by spx-lag 1/2/1 to 1/2/2
[Provisional-PE]ICX7450-48F Router(config-spx-unit-1)# no spx-port 1/2/3
spx-port 1/2/3 is removed.
[Provisional-PE]ICX7450-48F Router(config-spx-unit-1)# spx-port 1/2/4
spx-port 1/2/3 is replaced by spx-port 1/3/1
 [Provisional-PE]ICX7450-48F Router(config-spx-unit-1)# show running-config
Current configuration:
!
ver 08.0.40b1T213
!
spx pe-enable
spx suggested-id 20
spx unit 1
  module 1 icx7450-48f-sf-port-management-module
  module 2 icx7400-xgf-4port-40g-module
```

```
  module 4 icx7400-qsfp-1port-40g-module
  spx-lag 1/2/1 to 1/2/2
  spx-port 1/2/4
!
```

The following segment saves the configuration in the SPX boot file and confirms its contents.

```
[Provisional-PE]ICX7450-48F Router# write memory
[Provisional-PE]ICX7450-48F Router(config-spx-unit-1)# show config
Configuration in spx_pe.boot:
!
ver 08.0.40b1T213
!
spx pe-enable
spx suggested-id 20
 spx unit 1
  module 1 icx7450-48f-sf-port-management-module
  module 2 icx7400-xgf-4port-40g-module
  module 4 icx7400-qsfp-1port-40g-module
  spx-lag 1/2/1 to 1/2/2
  spx-port 1/2/4
!
```

The following segment reloads the ICX 7450, which moves from Provisional-PE to PE mode after the reload.

```
[Provisional-PE]ICX7450-48F Router# reload
Are you sure? (enter 'y' or 'n'): y
Sent SIGKILL to all processes
Requesting system reboot
Restarting system.
!
!
!!!!! CHECKING IF LINKSCAN IS UP
 hal_system_enable_traffic(T=505,task=appl) g_cheetah_total_dev_num=2
Non-OFFICIAL_RELEASE: Enabling the Flag to display the CPU buffer error messages
Non-OFFICIAL_RELEASE: Enabling the Memory Leak Finder
CPU Buffer Management debugging is turned ON
CPU BM INFO: The CPU Buffer Management Dynamic Leak Finder WILL automatically print leaked buffers
CPU Buffer Management Dynamic Leak Finder successfully STARTED
System is booting up in PE mode: Jumbo frame is disabled.
System initialization completed...console going online.
  Copyright (c) 1996-2015 Ruckus Wireless, Inc. All rights reserved.
    UNIT 1: compiled on Apr 20 2015 at 23:02:05 labeled as SPR08040b1
      (29294788 bytes) from Secondary SPR08040_kklin.bin
        SW: Version 08.0.40b1T213
      Compressed Boot-Monitor Image size = 786944, Version:10.1.04T215 (spz10104b007)
  HW: Stackable ICX7450-48F
  Internal USB: Serial #: 9900614052000013
      Vendor: ATP Electronics, Total size = 1919 MB
==========================================================================
 1000 MHz ARM processor ARMv7 88 MHz bus
 8192 KB boot flash memory
 2048 MB code flash memory
 2048 MB DRAM
STACKID 1  system uptime is 50 second(s)
The system : started=warm start   reloaded=by "reload"
*** NOT FOR PRODUCTION ***

[PE]ICX7450-48F Router>1/1/2 - SFP module detected
1/1/3 - SFP module detected

Optics detected on 1/2/1
 Optics detected on 1/2/2
 Optics detected on 1/2/3
 Optics detected on 1/2/4
 Optics detected on 1/4/1

[PE]ICX7450-48F Router>
Power supply 1  detected.
Power supply 1  is up.
Power supply 1  is up.
```

```
[PE]ICX7450-48F Router>
```

The following segments confirm the PE configuration.

```
[PE]ICX7450-48F Router> en
No password has been assigned yet...
[PE]ICX7450-48F Router# show running-config
Current configuration:
!
ver 08.0.40b1T213
!
spx pe-enable
spx unit 1
  module 1 icx7450-48f-sf-port-management-module
  module 2 icx7400-xgf-4port-40g-module
  module 4 icx7400-qsfp-1port-40g-module
  spx-lag 1/2/1 to 1/2/2
  spx-port 1/2/4
!
!

[PE]ICX7450-48F Router(config)# show interface brief

Port       Link    State   Dupl Speed Trunk Tag Pvid Pri MAC             Name
1/1/1      Down    None    None None  None  No  1    0   cc4e.246c.f190
1/1/2      Down    None    None None  None  No  1    0   cc4e.246c.f191
1/1/3      Down    None    None None  None  No  1    0   cc4e.246c.f192
<snip>
1/1/47     Down    None    None None  None  No  1    0   cc4e.246c.f1be
1/1/48     Down    None    None None  None  No  1    0   cc4e.246c.f1bf
1/2/1      Up      Forward Full 10G   None  No  1    0   cc4e.246c.f1c1
1/2/2      Up      Forward Full 10G   None  No  1    0   cc4e.246c.f1c2
1/2/3      Up      Forward Full 10G   None  No  1    0   cc4e.246c.f1c3
1/2/4      Up      Forward Full 10G   None  No  1    0   cc4e.246c.f1c4
1/4/1      Up      Forward Full 40G   None  No  1    0   cc4e.246c.f1c9
mgmt1      Up      None    Full 1G    None  No  None 0   cc4e.246c.f190
```

The following segment shows the new PE joining the CB. It is assigned SPX unit ID 18 because it matches the reserved configuration created previously on the CB. This overrides the suggested ID (20) configured on the provisional PE.

```
[PE] ICX7450-48F Router(config)#T=59.6: This unit is assigned an ID 18 by CB u1.

[PE] ICX7450-48F Router(config)#T=60.1: Spx unit 18 becomes READY.
```

After the PE joins the CB, its prompt changes to include the word "local" and its PE ID. You can check the PE configuration locally as shown in the following example.

```
[PE]local-18@ICX7450-48F Router# show running-config
Current configuration:
!
ver 08.0.40b1T213
!
spx pe-enable
spx unit 18                       |<-- assigned unit 18
  pe-name bldg2-floor2-stk18      |<-- pushed from CB configuration
  module 1 icx7450-48f-sf-port-management-module
  module 2 icx7400-xgf-4port-40g-module
  module 4 icx7400-qsfp-1port-40g-module
  spx-lag 18/1/10 to 18/1/11       <-- pushed from the CB configuration
  spx-port 18/2/4
```

You can gain remote access to the CB console as shown in the following example.

```
[PE]local-18@ICX7450-48F Router# rconsole cb
```

Campus Fabric Considerations for Layer 2, Layer 3, Multicast, Security, and QoS

- Campus Fabric Layer 2 considerations....93
- Campus Fabric Layer 3 unicast considerations....95
- Campus Fabric and IP multicast considerations....96
- Campus Fabric security considerations....97
- Campus Fabric QoS considerations....99

Campus Fabric Layer 2 considerations

In the CB (core) stack, Layer 2 forwarding is performed on the local unit. However, forwarding decisions for PE unit ports are made in the CB, not locally on the PE.

MAC learning is disabled in Campus Fabric PE units.

The CB stack maps each E-tag E-CID and its associated physical port to a virtual port. The CB supports Layer 2 forwarding between virtual ports and between virtual and physical ports. The CB is responsible for programming MAC addresses associated with the PE units for forwarding traffic to the PE units in the Campus Fabric domain.

VLAN filtering is performed in the CB. This means that on CB physical and virtual ports:

- Tagged packets (with a matching VLAN) are allowed on an untagged port.
- Untagged or priority tagged packets on a tagged port are not allowed and are dropped.
- All tagged, untagged, and priority tagged packets are allowed on dual-mode ports.

By default, each PE port is allowed membership in a maximum of four VLANs, including the default VLAN. You can increase the number of memberships per port to as many as 16 VLANs using the **max-vlan** command.

The following table summarizes Layer 2 feature support available in a Campus Fabric domain.

TABLE 10 Layer 2 feature support in a Ruckus Campus Fabric domain

Feature	Support
MAC FDB • Learning • Aging • Move • Delete • Bulk flush • Disable learning per port • Configurable MAC age timer	Yes for CB ports Not supported for PE ports Minimum age timer has increased to 60 seconds.
Port-based VLANs • Untagged • Tagged • Dual Mode	Yes for CB ports Yes for PE ports

TABLE 10 Layer 2 feature support in a Ruckus Campus Fabric domain (continued)

Feature	Support
Dynamic and Application VLANs (Layer 2 MAC table)	Yes for CB ports Not supported for PEs: Application VLANs
Static MMAC	Yes for CB ports Not supported on PE ports
MAC port security	Yes for CB ports Not supported on PE ports
Link aggregation • Static LAG • LACP • Keep alive LAG • Add/Delete/Enable/Disable port • Short/Long timeout • Trunk threshold • LAG hardware failover	Yes for CB ports Not supported on PE ports
xSTP • Single/Global 802.1D • Single/Global 802.1W • Per VLAN 802.1D • Per VLAN 802.1W • 802.1S • Cisco PVST • BPDU Guard • Root Guard • Designated Guard • Error disable recovery • STP protect • Fast port span • Fast uplink span	Yes Not supported for PEs: MSTP
Super-aggregated VLANs (SAV)/Q-in-Q using Tag Profile	Yes for CB ports Not supported for PE ports
Topology Groups • STP • RSTP • MRP • VSRP	Yes for CB ports Not supported for PE ports
VLAN Groups/VLAN range	Yes for CB ports Not supported for PEs: VLAN Group
Metro Ring Protocol (MRP)	Yes for CB ports Not supported for PEs
Private VLAN • Tagged/Untagged port • Isolated VLAN • Community VLAN • Primary VLAN	Yes for CB ports Not supported for PEs

TABLE 10 Layer 2 feature support in a Ruckus Campus Fabric domain (continued)

Feature	Support
• Inter-Switch Link (ISL)	
UDLD • Untagged and tagged port • Per VLAN	Yes for CB ports Not supported for PEs
VSRP	Yes for CB ports Not supported for PEs
MCT	Yes for CB ports Not supported for PEs
GVRP	Yes for CB ports Not supported for PEs
Loop Detect	Yes for CB ports Supported on untagged and dual-mode PE ports. Strict mode loop-detection is not supported on strictly tagged PE ports. The maximum loop detect interval value has been increased from 100 to 300 (30 seconds).
Link OAM	Yes for CB ports Not supported for PEs
Ethernet OAM	Yes for CB ports Not supported for PEs

Campus Fabric Layer 3 unicast considerations

The following table lists Layer 3 unicast features available in a Campus Fabric domain for ICX 7150, ICX 7250, or ICX 7450 devices enabled as PE units. Layer 3 features do not change for ICX 7750 devices enabled as CB units.

TABLE 11 Layer 3 unicast features in a Campus Fabric domain

Layer 3	PE support	
Features and capabilities	**IPv4**	**IPv6**
Static Routes	Yes	Yes
Host Routes	Yes	Yes
Virtual Interfaces	Yes	Yes
Routed Interfaces	Yes	Yes
Route-only Support	Yes	Yes
RIP v1/v2 announce	Yes[1]	N/A
RIPv1/v2	Yes [1]	N/A
RIPng	N/A	No

[1] On a VE when the VE (VLAN) contains ports on a PE unit.

TABLE 11 Layer 3 unicast features in a Campus Fabric domain (continued)

Layer 3	PE support	
OSPFv2	Yes [1]	N/A
OSPFv3	N/A	Yes[1]
ECMP	Yes[2]	Yes[2]
VRRP	Yes	N/A
VRRPv3	No	Yes
VRRP-E	Yes	Yes
VRRP-E SPF	Yes	Yes
IPv6 over IPv4 Tunnels	N/A	No[3]
Multi-VRF	Yes	Yes
IPv4 over GRE-IPv4 Tunnels	Yes[1]	N/A
BGP	Yes[1]	N/A
BGP4+	Yes[1]	Yes[1]

Campus Fabric and IP multicast considerations

In a Campus Fabric domain, forwarding decisions always occur in the CB, even for incoming traffic on a PE port.

In the upstream direction (from a PE to a CB), the packets are tagged with an E-tag to identify the ingress PE or SPX port. In the downstream direction (from a CB to a PE), the packets are tagged with an E-tag to identify the egress PE ports. E-channel identifiers (E-CIDs) contained in the E-tag header are used to identify a single PE port or a set of PE ports.

Multicast E-CID and IEEE 802.1BR

The point-to-multipoint E-channels used for remote replication are identified by an E-CID with a value in the range of 0x1000 to 0x3FFF (values less than this are reserved for E-CIDs associated with point-to-point E-channels).

General Campus Fabric multicast considerations

Unless otherwise stated, Layer 2 and Layer 3 multicast features supported on a standalone ICX 7750 are supported by the CB in a Campus Fabric domain, and the Layer 2 and Layer 3 scaling capacity are the same.

NOTE
An IP address cannot be configured on a PE port. Consequently, IPv4 and IPv6 multicast routing configuration is not supported on an IP interface for any PE unit.

NOTE
For details on Campus Fabric configuration for multicast, refer to the *Ruckus FastIron IP Multicast Configuration Guide*.

[1] On a VE when the VE (VLAN) contains ports on a PE unit.
[2] Not supported on VP LAGs.
[3] Configuration is not blocked, but the feature is not supported. All IPv6 tunnel packets will be dropped.

Considerations for multicast forwarding on PE units

- The PE unit performs local replication of multi-destination traffic. The PE unit can perform replication within a VLAN, but not across VLANs.
- In a Campus Fabric domain, the following actions are not supported in a VLAN or VE on which multicast snooping or multicast routing is enabled:
  - Connecting a PIM router to a PE port.
  - Connecting a multicast (IGMP or MLD) querier switch to a PE port.
- Multi-destination traffic forwarding and replication on PE units is performed using forwarding entries in the Layer 2 table.
- A lookup is performed using a multicast E-CID in the E-tag header.
- Forwarding cache entries are set up, updated, or torn down based on the E-channel register Control and Status Protocol (CSP) messages from the CB unit.
- Campus Fabric multicast deployment can be used to route the multicast traffic back to the ingress PE port.

Campus Fabric security considerations

The following table indicates which security features are available on PE units in a Campus Fabric domain. All security features are available in a CB stack configuration, unless otherwise noted. Refer to the *Ruckus FastIron Features and Standards Support Matrix* for additional information.

NOTE
ICX7400-SERVICE-MOD IPsec modules are not supported in ICX 7450 devices used as PE units.

TABLE 12 Security features supported in a Campus Fabric domain

Feature group	Feature name	FastIron support
Security features - Layer 2	MAC filters	Yes
Security features - Layer 3	IPv4 ingress ACLs	Yes
	IPv6 ingress ACLs	Yes
	IPv4 egress (outbound) ACLs	Yes
	IPv6 egress (outbound) ACLs	Yes
Security features - DDoS attack protection	TCP-SYN attack prevention	Yes
	ICMP attack protection	Yes
Security features - Services	Dynamic ARP Inspection	Yes
	ND Inspection	Yes
	DHCPv4 snooping	Yes
	DHCPv6 snooping	Yes
	IPv4 Source Guard	Yes
	IPv6 RA Guard	Yes
	Policy Based Routing	Yes
	RADIUS	Yes
	Flex-Authentication - dynamic ACLs	Yes
	Flex-Authentication - dynamic MAC filters	Yes
	Openflow	No

TABLE 12 Security features supported in a Campus Fabric domain (continued)

Feature group	Feature name	FastIron support
	Outbound ACLs for CPU traffic	Yes
	DSCP remarking	Yes
	PCP remarking	Yes
	ACL accounting	Yes
	ACL logging	Yes
	ACL-based traffic policy	Yes
	PPPVLAN	Yes
	ACL on ARP	Yes
Traffic management and monitoring	ARP rate limiting	Yes
	Ingress port rate limiting	Yes
	Egress port rate shaping	Yes
	ACL-based mirroring	Yes
	Web-auth	Yes[4]
	sFlow	Yes

Security design considerations

From FastIron release 08.0.70 onward, the use of Campus Fabric and OpenFlow features are mutually exclusive by design.

Security performance considerations

Pay attention to the following security performance considerations in a Campus Fabric domain:

- When more than 5,000 ACL filters are configured, PE units require significant time to resync following a reload. In a Campus Fabric domain with maximum ACL filters (8,000), the time required for PE units to resync is approximately 13 to 17 minutes.
- An ACL request is considered complete only after the request has been completed on every related unit. Consequently, an ACL request may take longer when it is distributed across CB and PE units.
- The distribution model is based on recovery from failure using a rollback mechanism, with the rollback occurring on each successful unit. The rollback mechanism can incur additional delays.
- All CLI requests are blocked on the security framework until ACL requests are completed.

Additional security considerations

In a Campus Fabric domain, the following security considerations apply:

- Foundry Discovery Protocol (FDP) packets are blocked at PE interfaces, even when FDP pass through is configured. However, the packets are still forwarded upstream for processing in the CB. Although FDP neighbors can be displayed within the Campus Fabric domain, for example, with the **show fdp neighbor** command, no FDP packets are forwarded to non-SPX devices (that is, to devices that are connected to PEs but that are not part of the Campus Fabric domain).

[4] User-based ACLs are not supported in Web-auth for either CB or PE units.

Campus Fabric QoS considerations

QoS classifications for Campus Fabric PE ports

In a Campus Fabric system, forwarding decisions for PE ports are made in the CB. When a PE unit receives frames through its extended ports, the PE appends an E-tag to each of the frames and transmits them to an upstream port toward the CB. After the CB makes forwarding decisions, the frames are forwarded to destination modules in the Campus Fabric domain. If the destination module is a PE unit, the frames are sent with an E-tag. The E-tag carries an E-PCP field consisting of three bits, which allows the E-PCP to carry eight priority classifications.

QoS classifications are supported for PE ports and are encoded in the E-PCP. A priority classified at an edge device is honored in both upstream and downstream directions. When congestion occurs in SPX ports, frames are dropped based on their priorities.

QoS features under Campus Fabric

The same QoS features available for ICX 7750 devices in a normal configuration are supported on ICX 7750 devices enabled as CB units in a Campus Fabric domain. Most QoS features available in a standard configuration are also available on ICX 7150, ICX 7250, or ICX 7450 devices enabled as PE units. Port-based features apply to CB local ports and PE ports.

TABLE 13 QoS feature support on PE units

Feature	PE units
802 1p Quality of Service	Yes
DiffServ support	Yes
Port priority	Yes
Port trust DSCP	Yes
MAC address priority	No
QoS mappings	Yes
Global QoS egress queue scheduler	Yes
Port-based egress queue scheduler	Yes
Port-based egress buffer profile	Yes
Port-based ingress buffer profile	No
Priority-based flow control	No
Port-based symmetrical flow control	No
Egress queuing statistics	Yes
sFlow	Yes

NOTE
Because forwarding decisions are made in the CB and MAC addresses are not learned in PE units, MAC address priority cannot be applied to PE SPX ports.

QoS for SPX ports

To ensure system stability, most QoS user configurations are not allowed for SPX ports. The following limitations apply to QoS in a Campus Fabric domain:

- Port-based classification cannot be applied to SPX ports. SPX ports are set to honor the E-PCP.

- Port flow control is disabled to preserve cascade or uplink port bandwidth.
- Priority-based flow control is disabled.
- The egress queue scheduler runs in mixed SP WRR mode under **qos mechanism**. A user-configured scheduler cannot be applied to SPX ports.
- A user-defined ingress or egress buffer profile cannot be applied to SPX ports.

Performance impact

SPX ports on PE and CB units carry an E-tag as part of the frame. The E-tag adds eight bytes of overhead, which should be taken into account when calculating port or system throughput.

Control packets under SPX

Upper layer protocols, such as routing and multicast protocols, run in the CB. When a PE port receives control packets for these protocols, the PE unit assigns the appropriate priority to each packet before forwarding it to the CB. The same priority applies for each type of control packet when it is sent to PE ports downstream.

TABLE 14 QoS control packets

QoS priority	Protocols
P7	Stacking Control, CSP Control for SPX, SPX LLDP (Ether type 0x88CB)
P6	Layer 2 Control: LACP, UDLD (802.3ah), STP, RSTP, PVST, MRP, LLDP Others: VRRP (v4 and v6), VRRP-E (v4 and v6), GRE keep-alive
P5	BGP, DHCP, OSPF (v2 and v3), RIP v2, PIM, ICMP
P4	IGMP, MLD, ARP, RIP v1, IPv6 ND
P3	–
P2	–
P1	sFLOW
P0	–

Campus Fabric Management

- Logging in through the console port 101
- Using the remote CB console 102
- Handling nonoperational PE units 102
- Assigning an ID to a PE unit 103
- Replacing a PE unit 104
- Replacing PE units with the zero-touch or SPX interactive utility 105
- Moving a PE unit and retaining its ID (manual methods) 109
- Removing a PE ring and its configuration 111
- Configuring SPX ports and LAGs on a live system 120
- Campus Fabric (SPX) image upgrade 121
- Unconfiguring the CB stack or PE units 125
- CB stack merges and breaks 127
- Displaying Campus Fabric (SPX) information 128
- Campus Fabric mirroring overview 138
- MIB support for Campus Fabric 802.1br SPX configurations 139

Logging in through the console port

When a device becomes a stack member in a traditional stack, it establishes a remote connection to a virtual console port on the active controller. Input and output are relayed between the physical console port on the stack member and the virtual console port on the active controller. Because each stack member connects to an independent virtual console port on the active controller, the console ports on multiple stack units may be used simultaneously.

When a stack unit establishes communication with the active controller, it also establishes a remote console session to the active controller. In a normally functioning traditional stack, a console cable may be connected to any of the stack units and provide access to the same commands on the active controller.

To establish a remote console session, enter the **rconsole** command followed by the stack unit ID.

```
device# rconsole 1
```

You can terminate a session between stack members in any of these ways:

- Enter the **logout** command at any level.
- Enter the **exit** command from the User EXEC level.

NOTE
For **rconsole** connections from stack units to the active controller, the escape sequence and other methods of terminating the session are not available.

NOTE
Error messages that are generated during a reload of the active controller do not appear on **rconsole** connections from stack units to the active controller. To see these error messages, you must connect a console cable to the active controller itself.

The following example shows how to establish a remote console session to a stack member and obtain status information. Notice that the **show stack** command on the stack members displays different information from what is shown when the **show stack** command is entered on the active controller.

A remote console session is established with stack unit 2 in the following example.

```
device# rconsole 2
Connecting to unit 2... (Press Ctrl-O X to exit)
rconsole-2@device# show stack
ID   Type          Role      Mac Address      Prio  State    Comment
2 D  ICX7750-48XGF standby   cc4e.246d.8d800  0     local    Ready
rconsole-2@device# exit
rconsole-2@device> exit
Disconnected.  Returning to local session...
```

Using the remote CB console

As in traditional stacking, remote console capability in a Campus Fabric domain allows the console from one unit to access the console of a second unit, for example, for monitoring and debugging.

The **rconsole** command allows for different types of remote access in a Campus Fabric domain:

- Monitor a PE unit from a standalone router or switch operating in regular mode.
- Access a PE unit console from a CB (core stack) member console.
- Access a CB member console from a PE unit console when the unit is in PE mode.
- Access the active controller of the CB from the console of another CB member.
- Access the active controller of the CB from a PE unit.

NOTE
When a PE unit is in Provisional-PE mode, the **rconsole** command is not available.

The following example creates a remote connection from the local PE to the active controller of the CB. The key sequence **Ctrl+o x** terminates the connection.

```
[PE]local-24@ICX7450-48 Router# rconsole ?
  controller-bridge   Connect to the active controller bridge
[PE]local-24@ICX7450-48 Router# rconsole controller-bridge
Connecting to control-bridge 3 console... (Press Ctrl-o x to exit)
ICX7750-20Q Router>
```

In the following example, a CB member creates a remote connection with a PE unit.

```
ICX7750-48F Router# rconsole ?
  DECIMAL   Unit number
ICX7750-48F Router# rconsole 17
Connecting to unit 17... (Press Ctrl-o x or type exit to exit)
[PE]rconsole-17@ICX7450-48P Router#
[PE]rconsole-17@ICX7450-48P Router# exit

Disconnected.  Returning to local session...
ICX7750-48F Router#
```

Handling nonoperational PE units

The CB can access nonoperational units through an SPX link to correct common issues.

A PE unit may become nonoperational for the following reasons:

- The PE is running an image version that does not match the version on the CB.
- The modules installed on the PE unit do not match the reserved configuration for the PE unit that is stored on the CB. For example, the reserved configuration on the CB contains a configuration for SPX unit 18 with a 48-port module in slot

1, but the actual PE unit has a 24-port module installed in slot 1. In this case, you can remove the reserved configuration of the nonoperational SPX unit 18 with the **no spx unit 18** command so the CB can learn unit 18 modules correctly. Refer to Adding a reserved PE configuration on the CB on page 74 for more information.

All data ports, except for SPX ports or SPX LAGs, in a nonoperational PE are shut down. The CB can still control the nonoperational PE in the following limited ways:

- The CB can download the correct images to the PE unit. Refer to Adding a reserved PE configuration on the CB on page 74 for more information.
- The CB can unconfigure the PE unit to convert it to a regular router. Refer to Unconfiguring the CB stack or PE units on page 125.
- The CB can reload the PE unit.

Assigning an ID to a PE unit

A PE unit does not carry its ID. Its ID is always assigned when it joins a CB.

NOTE
The zero-touch utility automatically assigns IDs to new PE units. Refer to Zero-touch configuration on page 53 for more information.

NOTE
The SPX interactive-setup utility suggests PE IDs for new units and asks for user confirmation. The user can change the IDs if necessary. Refer to SPX interactive-setup on page 58 for more information.

A PE ID can be assigned in different ways:

- You can use SPX interactive-setup option 1 to change the IDs of existing PEs.
- You can use SPX interactive-setup option 2 or 3 to assign an ID to a PE candidate.
- You can create a PE ID on the CB as part of an SPX unit configuration. The PE ID is assigned to a PE that joins with a matching configuration on the specified port.

  The following example creates two PE IDs, 20 and 21, for CB SPX port 1/1/10. The first PE unit that joins on SPX port 1/1/10 will be assigned a unit ID of 20. The second PE unit to join on the same port will be assigned a unit ID of 22.

  ```
  ICX7750-26Q Router# configure terminal
  ICX7750-26Q Router(config)# spx cb-config
  ICX7750-26Q Router(config-spx-cb)# spx-port 1/1/10
  ICX7750-26Q Router(config-spx-cb)# pe-id 1/1/10 20 22
  ```

  The following example creates the same PE IDs for the same port, based on the name associated with the CB's SPX port.

  ```
  ICX7750-26Q Router# configure terminal
  ICX7750-26Q Router(config)# spx cb-config
  ICX7750-26Q Router(config-spx-cb)# spx-port 1/1/10 pe-group finance
  ICX7750-26Q Router(config-spx-cb)# pe-id finance 20 22
  ```

  The following example creates the same PE IDs for the SPX connection, based on another port in the same SPX LAG.

  ```
  ICX7750-26Q Router# configure terminal
  ICX7750-26Q Router(config)# spx cb-config
  ICX7750-26Q Router(config-spx-cb)# spx-lag 1/1/10 1/1/11
  ICX7750-26Q Router(config-spx-cb)# pe-id 1/1/11 20 22
  ```

- You can configure a suggested ID on the PE unit before it joins the CB. The suggested ID may be overridden by the CB, however. For example, if the PE unit joins the CB and matches **pe-id** configuration, the PE unit will be assigned the PE ID

from the **pe-id** configuration instead of the suggested ID. The CB also does not assign the suggested ID if the ID is already in use on an active PE unit or if the ID exists in a **pe-id** configuration.

The following example creates a suggested ID of 20 on an ICX 7450 in Provisional-PE mode.

```
ICX7450-48F Router# configure terminal
ICX7450-48F Router(config)# spx pe-enable
[Provisional-PE]ICX7450-48F Router(config)# spx suggested-id 20
```

- If no suggested ID is configured for it, the PE unit may be assigned its old ID if the previous ID has not been used in any **pe-id** configuration.
- The CB assigns the PE an unused ID; that is, one that is not active or present in another **pe-id** configuration.

Assigning a PE ID that has been taken

Follow these steps to assign a different PE unit a PE ID that is already taken.

NOTE
Re-configuring a PE to use an existing PE ID may cause traffic interruption if the module and port configurations or the port connections do not match.

1. Physically disconnect the PE units to be changed.
2. Remove the **pe-id** configuration from the affected PE units, and reconfigure them using **pe-id** configurations that work with the new IDs.
3. Execute the **write memory** command to save the new **pe-id** configurations.

The following example reconfigures two PE IDs when PE unit 17 and PE unit 18 have been manually swapped, so that port 1/1/3 becomes associated with PE 17, and port 1/1/6 becomes associated with PE 18.

```
                                      <-- Disconnect units before changing
                                          the pe-id configuation.
ICX7750-26Q Router# configure terminal
ICX7750-26Q Router(config)# spx cb-config
ICX7750-26Q Router(config-spx-cb)# no pe-id 1/1/3 18 17 1/1/16
ICX7750-26Q Router(config-spx-cb)# pe-id 1/1/3 17 18 1/1/16  <-- Reconnect swapped units
                                                               after entering the new
                                                               pe-id configuration.

ICX7750-26Q Router(config-spx-cb)# exit
ICX7750-26Q Router(config)# exit
ICX7750-26Q Router# write memory
```

Replacing a PE unit

CB stack members can be replaced by a new unit, and the new unit automatically becomes part of the stack when stacking links are connected. This feature works as in previous releases for traditional stack members. Refer to the *Ruckus FastIron Stacking Configuration Guide* for more information on stack behavior.

When a PE unit is removed and a new PE unit is detected by the CB, the CB and the PE unit follow a standard initialization sequence. If the previous PE configuration is static (is still present on the CB) and the new PE unit contains a matching configuration, the PE joins and is assigned its old PE ID.

When you replace a PE unit with an existing PE of the same model, make sure that **spx allow-pe-movement** is not configured.

Converting a unit to serve as a replacement PE

NOTE
The previous description applies when a PE is replaced by another existing PE.

If the replacement unit is running in switch or router mode, follow one of these procedures to convert it to a PE:

- Manually enabling and configuring PE units on page 76
- Replacing PE units with the zero-touch or SPX interactive utility on page 105.

Replacing PE units with the zero-touch or SPX interactive utility

You can use either the zero-touch or SPX interactive utility to replace existing PE units. If you use zero-touch, all replacement units must be new (clean) units.

NOTE
The first time you enable zero-touch configuration, the system sends a zero-touch probe within 60 seconds. If a port specified in the **zero-touch-ports** configuration or a CB SPX port or LAG with no connection becomes active, a zero-touch probe is also triggered within a minute. Otherwise, a probe is sent every six minutes. It is recommended that you disable zero-touch provisioning once PE discovery is complete.

If the replacement unit has startup configuration, you must use the SPX interactive setup utility. The SPX interactive-setup utility can also be used for clean units.

Follow these steps to replace one or more PE units. The detailed example following the procedure uses SPX interactive-setup to replace two PE units.

1. Execute the **write memory** command if you have not already done so.

```
device# write memory
```

2. Power down the unit or units to be replaced, and remove connections.
3. Replace each PE unit with a new unit or a unit running switch or router mode.
4. If the replacement units are clean units and you opt to use the zero-touch utility, enter the **zero-touch-enable** command; otherwise, skip to the next step.

```
device# configure terminal
device(config)# spx cb-configure
device(config-spx-cb)# zero-touch-enable
```

The zero-touch utility discovers the replacement units and assigns them the PE IDs of the units they are replacing. Then it reloads the replacement units as PEs.

5. **NOTE**
   Follow this step only after disabling the **zero-touch-enable** command.

   If the replacement units are in switch or router mode, run the spx interactive-setup utility, and select option 3. If you are using the utility to discover new units, select option 2.

```
device# spx interactive-setup
You can abort spx interactive-setup at any stage by <ctrl-c>
0: quit
1: change PE IDs
2: discover and convert new units (no startup-config flash) to PEs
3: discover and convert existing/new standalone units to PEs
2&3 can also find new links and convert chain(s) to ring.
Please type your selection: 3
Probing topology to find new units...
```

   The SPX interactive-setup utility discovers the replacement units and assigns them the PE IDs of the units they are replacing. Then it reloads the replacement units as PEs.

The following set of examples replaces two PE units. In the example below, the active Campus Fabric configuration is first saved. The **show spx** command displays the Campus Fabric topology. The **show running-config** command displays details on the active configuration, including details on the modules installed in each CB and PE unit. The output shows that Campus Fabric is enabled (**spx** cb-enable) and lists the configured SPX ports and SPX LAGs. It indicates a ring of three PE units (20, 27, and 24) are connected through CB-SPX ports 1/1/1 and 1/1/3. Port 1/1/3 is part of a two-port SPX LAG.

```
device# write memory
device# show spx
T=12m21.0: alone: standalone, D: dynamic cfg, S: static
ID   Type          Role    Mac Address    Pri State   Comment
1  S ICX7750-48XGF standby 609c.9f1f.9900 128 remote  Ready
2  S ICX7750-48XGF active  cc4e.246d.9b00 128 local   Ready
20 D ICX7450-48GF  spx-pe  cc4e.246d.10b8 N/A remote  Ready
24 D ICX7450-48G   spx-pe  cc4e.248e.2f90 N/A remote  Ready
27 D ICX7450-48GF  spx-pe  cc4e.246c.f850 N/A remote  Ready

    active       standby
     +---+        +---+
     | 2 |2/4--2/1| 1 |2/4
     +---+        +---+
           +----+        +----+        +----+
  1/1/1--2/1| 20 |2/3--2/3| 27 |2/1--2/3| 24 |2/1==1/1/3
           +----+        +----+        +----+

device# show running-config
Current configuration:
!
ver 08.0.50b1T203
!
stack unit 1
  module 1 icx7750-48-xgf-port-management-module
  module 2 icx7750-qsfp-6port-qsfp-240g-module
  priority 128
  stack-port 1/2/1 1/2/4
stack unit 2
  module 1 icx7750-48-xgf-port-management-module
  module 2 icx7750-qsfp-6port-qsfp-240g-module
  module 3 icx7750-6q-6port-qsfp-240g-module
  priority 128
  stack-port 2/2/4
spx unit 20
  module 1 icx7450-48f-sf-port-management-module
  module 2 icx7400-xgf-4port-40g-module
  module 3 icx7400-xgf-4port-40g-module
  module 4 icx7400-xgf-4port-40g-module
  spx-port 20/2/1
  spx-port 20/2/3
spx unit 24
  module 1 icx7450-48-port-management-module
  module 2 icx7400-xgf-4port-40g-module
  module 3 icx7400-qsfp-1port-40g-module
  module 4 icx7400-qsfp-1port-40g-module
  spx-lag 24/2/1 to 24/2/2
  spx-port 24/2/3
spx unit 27
  module 1 icx7450-48f-sf-port-management-module
  module 2 icx7400-xgf-4port-40g-module
  module 3 icx7400-qsfp-1port-40g-module
  module 4 icx7400-qsfp-1port-40g-module
  spx-port 27/2/1
  spx-port 27/2/3
stack enable
stack rconsole-off
stack mac 609c.9f1f.9900
!
!
!
spx cb-enable
spx cb-configure
```

```
  spx-port 1/1/1
  spx-lag  1/1/3 to 1/1/4
  pe-id 1/1/1 20 27 24 1/1/3
!
```

In the following example, PE 24 and PE 27 have been powered down, disconnected, replaced by two new units, and reconnected. The **show spx** command displays the current Campus Fabric topology. All units are listed; however, the two units that were removed are in the "reserve" state, and the topology is no longer complete (the PE units and their SPX connections are lost).

```
device# show spx
T=16m0.6: alone: standalone, D: dynamic cfg, S: static
ID   Type          Role    Mac Address    Pri State   Comment
1  S ICX7750-48XGF standby 609c.9f1f.9900 128 remote  Ready
2  S ICX7750-48XGF active  cc4e.246d.9b00 128 local   Ready
20 S ICX7450-48GF  spx-pe  cc4e.246d.10b8 N/A remote  Ready
24 S ICX7450-48G   spx-pe  0000.0000.0000 N/A reserve <-------unit lost
27 S ICX7450-48GF  spx-pe  0000.0000.0000 N/A reserve <-------unit lost

    active       standby
     +---+        +---+
     | 2 |2/4--2/1| 1 |2/4
     +---+        +---+
           +----+
  1/1/1--2/1| 20 |2/3-
           +----+
```

In the following example, the **spx interactive-setup** command is entered to discover the replacement PE units. In this example, menu option 2 is selected because the two replacement PE units have no configuration. (As an alternative, you can enable and run the zero-touch utility as explained earlier.) The SPX interactive-setup utility probes the existing Campus Fabric topology for new units. It discovers the two new units in the same positions as the PE units that were removed. The user is given the default option to accept each old PE ID in turn and presses **Enter** to accept each one. The utility presents the accepted topology and asks for user confirmation. Once the user accepts the topology, the utility reloads the replacement units as PE units.

```
device# spx interactive-setup
You can abort spx interactive-setup at any stage by <ctrl-c>
0: quit
1: change PE IDs
2: discover and convert new units (no startup-config flash) to PEs
3: discover and convert existing/new standalone units to PEs
2&3 can also find new links and convert chain(s) to ring.
Please type your selection: 2
Probing topology to find new units...

Horizontal bars link to discovered units. Vertical bars link to CB or PEs.

Chain #0: link to PE(s), so display PE chain(s). ============================
#1: icx7450-48f-sf-port-management-module CC4E.246C.F850
#2: icx7450-48-port-management-module CC4E.248E.2F90
            +-----+
  1/1/1--2/1| 20 |2/3-
            +-----+


  20/2/3         1/1/3
     |            ||
     |            ||
    2/3           2/1
  +-----+       +----+
  |  1 |2/1--2/3|  2 |
  +-----+       +----+

Discovered 1 chain/ring
chain #0: Do you want to select this chain?(enter 'y' or 'n'): y
#2: icx7450-48-port-management CC4E.2489.1A00, type an ID (No: 0, default: 24): <----- Type Enter.
#1: icx7450-48f-sf-port-management CC4E.246E.1080, type an ID (No: 0, default: 27): <----- Type Enter.

You selected 2 unit(s): #1: ID=27, #2: ID=24,

                           #1           #2
            +-----+       +----+       +----+
  1/1/1--2/1| 20 |2/3--2/3| 27 |2/1--2/3| 24 |2/1==1/1/3
            +-----+       +----+       +----+
Proceeding will produce the above topology. Do you accept it? (enter 'y' or 'n'): y
spx interactive-setup discovers 1 chain(s). valid #=1, selected #=1
```

Moving a PE unit and retaining its ID (manual methods)

NOTE

Using the **spx allow-pe-movement** command allows PEs to retain their IDs when they are disconnected and moved to another physical port. Refer to Configuring SPX to move PE units without changing IDs on page 63 for more information.

There are two ways to move a PE unit or a chain of PE units to a different CB port and retain the PE ID so the port configurations under the PE ID that has been moved do not require changes.

1. On the CB, change or add the **pe-id** configuration for the CB port.

2. Remove the **pe-id** configuration of the affected PE units (both moved and retained units) so the ID assignment is based on the suggested ID or the previous ID assigned to the PE unit.

Consider the two configurations shown in the following figure.

FIGURE 38 Moving PE units from one CB port to another

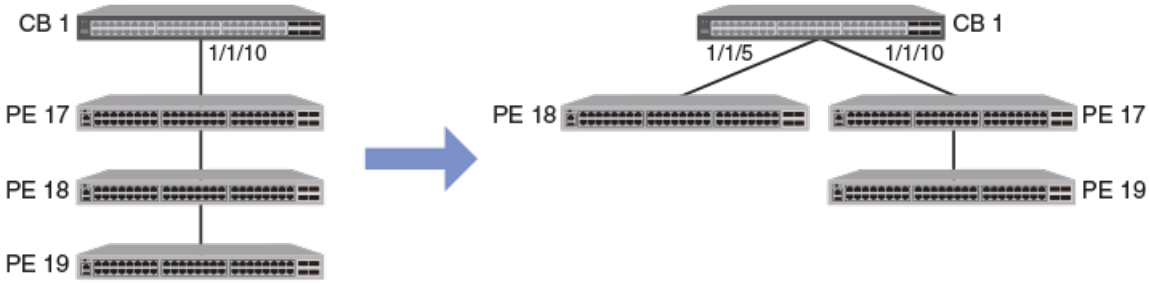

Suppose you want to move PE unit 18 to SPX port 1/1/5 on the CB. If you do not change the **pe-id** configuration from the CB, PE unit 18 will be assigned a new ID. PE unit 19, still connected on SPX port 1/1/10, becomes PE unit 18. As a result, the port configurations for PE unit 18 and 19 no longer apply to the renumbered units.

The following procedures describe the two options for retaining the PE ID for the moved PE unit.

Method 1: Prepare a new topology by reconfiguring PE IDs on the CB

1. Disconnect PE unit 18 and 19 from the CB.

   NOTE
   The **pe-id** configuration cannot be changed on a live unit.

2. Change the **pe-id** configuration on CB port 1/1/10 (from 17, 18, and 19 to 17 and 19).
3. Add PE ID 18 under the configuration for SPX port 1/1/5.
4. As shown in the CB configuration on the right in the previous figure, connect PE unit 18 to SPX port 1/1/5, and connect PE unit 19 to PE unit 17 on SPX port 1/1/10.
5. Enter the **write memory** command to save the configuration.

The following example changes the port configuration for SPX ports 1/1/10 and 1/1/5.

```
ICX7750-26Q Router# configure terminal
ICX7750-26Q Router(config)# spx cb-config
ICX7750-26Q Router(config-spx-cb)# pe-id 1/1/10 17 19
ICX7750-26Q Router(config-spx-cb)# pe-id 1/1/5 18
ICX7750-26Q Router(config-spx-cb)# exit
ICX7750-26Q Router(config)# exit
ICX7750-26Q Router# write memory
```

Method 2: Allow suggested ID or previous unit ID assignment

1. Disconnect PE units 18 and 19 from the CB.

2. On the CB, remove **pe-id** configuration for units 18 and 19 from CB port 1/1/10.

   NOTE
   You must retain **pe-id** configuration for PE unit 17 because it is still connected to the CB. If you try to remove it, the system blocks the command.

```
ICX7750-26Q Router# configure terminal
ICX7750-26Q Router(config)# spx cb-config
ICX7750-26Q Router(config-spx-cb)# pe-id 1/1/10 17
!
!
!
```

3. On the local console for PE units 17, 18, and 19, remove the suggested ID if it is different from the previous assigned ID. If it is the same, you can remove it or keep it. The CB ID assignment will be based on the suggested ID or the previous ID.
4. Connect PE unit 18 to SPX port 1/1/5 and PE unit 19 to PE 17 on SPX port 1/1/10 as shown in the CB configuration on the right in the previous figure.

   The CB assigns PE units 18 and 19 the desired ID, either based on the suggested ID that is configured or based on the unit's previous ID.
5. Enter the **write memory** command to save the configuration.

```
ICX7750-26Q Router(config-spx-cb)# exit
ICX7750-26Q Router(config)# exit
ICX7750-26Q Router# write memory
```

Removing a PE ring and its configuration

NOTE
For information on physical ring formation, refer to Best practice for PE ring configuration on page 34.

NOTE
The PE ring cannot be removed while it is active. It must be physically disconnected first.

To remove a ring and its configuration, physically disconnect the ring by removing all SPX links either between the CB and a cascade PE unit, or between two PE units in the ring. You may also want to remove the two SPX links on each of the edge PEs that

are unused after the connection is broken to allow the ports to be used as data ports. The following procedure steps you through the removal of a PE ring using a typical example.

1. Enter the **show spx** command to display Campus Fabric topology.

```
ICX 7750# show spx
T=18m44.4: alone: standalone, D: dynamic cfg, S: static
ID   Type          Role    Mac Address    Pri State   Comment
1  S ICX7750-48XGF standby 609c.9f1f.9900 128 remote  Ready
2  S ICX7750-48XGF active  cc4e.246d.9b00 128 local   Ready
20 S ICX7450-48GF  spx-pe  cc4e.246d.10b8 N/A remote  Ready
24 S ICX7450-48G   spx-pe  cc4e.248e.2f90 N/A remote  Ready
27 S ICX7450-48GF  spx-pe  cc4e.246c.f850 N/A remote  Ready

    active       standby
     +---+        +---+
     | 2 |2/4--2/1| 1 |2/4
     +---+        +---+
           +-----+        +-----+        +-----+
  1/1/1--2/1| 20 |2/3--2/3| 27 |2/1--2/3| 24 |2/1==1/1/3
            +-----+        +-----+        +-----+
```

   The Campus Fabric domain contains a two-unit CB stack and three connected PE units. The PE units are connected in a ring through CB SPX ports 1/1/1 and 1/1/3. Port 1/1/3 is part of a LAG connection.

2. Enter the **show spx ring all** command to obtain details on PE rings in the domain. The output provides the Ring ID and the attached CB ports. Enter the **show spx ring** command followed by the correct ring ID to obtain more detail on the ring to be removed.

```
ICX 7750# show spx ring all

  ------------------------------------------------------------------------------------
  Ring Id |FSM State |CB port  Lag  |Remote CB port  Lag  |Log Block Link
  ------------------------------------------------------------------------------------
  1        ACTIVE     1/1/1    3072  1/1/3           3079   PE20x--xPE27
```

The output confirms the presence of a single PE ring, Ring 1, and shows that it is active. It indicates that the logical block for this ring is between PE 20 and PE 27.

```
ICX 7750# show spx ring 1
==========================

  ------------------------------------------------------------------------------------
  Ring Id |FSM State |CB port  Lag  |Remote CB port  Lag  |Log Block Link
  ------------------------------------------------------------------------------------
  1        ACTIVE     1/1/1    3072  1/1/3           3079   PE20x--xPE27


  CB chains Information:

  ------------------------------------------------------------------------------------------------------
  CB Port    Lag  | Epoch |Ring    Id      FSM State|Remote CB port  Lag  |         Chain
  ------------------------------------------------------------------------------------------------------
  1/1/1      3072  13      YES     1       ACTIVE    1/1/3           3079   PE20x--xPE27--PE24


         PE chain information connecting to CB port 1/1/1 [Lag 3072]
            ------------------------------------------------------------------------
            PE Id | Epoch | FSM state |Uplink port|Casc port|Log Block|Prev PE|Next PE
            ------------------------------------------------------------------------
            PE20   13      ACTIVE      20/2/1      20/2/3    YES       --      x--x


         PE chain information connecting to remote CB port 1/1/3 [Lag 3079]
            ------------------------------------------------------------------------
            PE Id | Epoch | FSM state |Uplink port|Casc port|Log Block|Prev PE|Next PE
            ------------------------------------------------------------------------
            PE24   13      ACTIVE      24/2/1      24/2/3    NO        --      PE27
            PE27   13      ACTIVE      27/2/1      27/2/3    YES       PE24    x--x
```

The output lists all PE units in the ring ("Chain'), identifies the upstream ("Uplink") and downstream ("Cascade") port for each PE unit in the ring, specifies the previous and next PE in the chain, provides the logical block point, and displays the state of each PE.

3. Enter the **show running-config** command to check the details of the current configuration.

```
ICX 7750# show running-config
Current configuration:
!
ver 08.0.50b559T203
!
stack unit 1
  module 1 icx7750-48-xgf-port-management-module
  module 2 icx7750-qsfp-6port-qsfp-240g-module
  priority 128
  stack-port 1/2/1 1/2/4
stack unit 2
  module 1 icx7750-48-xgf-port-management-module
  module 2 icx7750-qsfp-6port-qsfp-240g-module
  module 3 icx7750-6q-6port-qsfp-240g-module
  priority 128
  stack-port 2/2/4
spx unit 20
  module 1 icx7450-48f-sf-port-management-module
  module 2 icx7400-xgf-4port-40g-module
  module 3 icx7400-xgf-4port-40g-module
  module 4 icx7400-xgf-4port-40g-module
  spx-port 20/2/1
  spx-port 20/2/3
spx unit 24
  module 1 icx7450-48-port-management-module
  module 2 icx7400-xgf-4port-40g-module
  module 3 icx7400-qsfp-1port-40g-module
  module 4 icx7400-qsfp-1port-40g-module
  spx-lag 24/2/1 to 24/2/2
  spx-port 24/2/3
spx unit 27
  module 1 icx7450-48f-sf-port-management-module
  module 2 icx7400-xgf-4port-40g-module
  module 3 icx7400-qsfp-1port-40g-module
  module 4 icx7400-qsfp-1port-40g-module
  spx-port 27/2/1
  spx-port 27/2/3
stack enable
stack rconsole-off
stack mac 609c.9f1f.9900
!
!
!
spx cb-enable
spx cb-configure           |
  spx-port 1/1/1           | <--- Current CB SPX links to PEs.
  spx-lag  1/1/3 to 1/1/4  |
  pe-id 1/1/1 20 27 24 1/1/3 <--- Current pe-id configuration
                                  connects through CB SPX ports
                                  1/1/1 and 1/1/3.
```

The output includes current CB SPX port and LAG connections to the PEs and pe-id configuration.

4. Physically break the PE ring by removing all SPX links between the CB and a PE or between two PE units in the ring. A SYSLOG message is generated to indicate the ring has been broken. You can also confirm the break with the **show spx** and **show spx ring***id* commands. However, current configuration will remain unchanged.

```
 SYSLOG:
SPX SPX Ring Instance 1 state change to BREAK (CB1/1/1 - CB1/1/3). Logical block: Ring is broken -
No Logical Block

ICX 7750# show spx
T=22m11.7: alone: standalone, D: dynamic cfg, S: static
ID   Type          Role    Mac Address    Pri State   Comment
1  S ICX7750-48XGF standby 609c.9f1f.9900 128 remote  Ready
2  S ICX7750-48XGF active  cc4e.246d.9b00 128 local   Ready
20 S ICX7450-48GF  spx-pe  cc4e.246d.10b8 N/A remote  Ready
24 S ICX7450-48G   spx-pe  cc4e.248e.2f90 N/A remote  Ready
27 S ICX7450-48GF  spx-pe  cc4e.246c.f850 N/A remote  Ready

    active       standby
     +---+        +---+
     | 2 |2/4--2/1| 1 |2/4
     +---+        +---+
           +-----+
  1/1/1--2/1| 20 |2/3-  <--- 20/2/3 port is
down.
           +-----+

           +-----+        +-----+
  1/1/3==2/1| 24 |2/3--2/1| 27 |2/3-  <--- 27/2/3 port is down.
           +-----+        +-----+
```

In this case, the SPX port 20/2/3 is disconnected from SPX port 27/2/3 as shown in the **show spx** topology.

```
ICX 7750# show spx ring 1

  ------------------------------------------------------------------------------
  Ring Id |FSM State |CB port  Lag  |Remote CB port  Lag  |Log Block Link
  ------------------------------------------------------------------------------
  1        BREAK      1/1/1    3072  1/1/3           3079   Ring is broken - No Logical Block


  CB chains Information:

  ------------------------------------------------------------------------------------------------
  CB Port    Lag  | Epoch |Ring    Id      FSM State|Remote CB port  Lag  |         Chain
  ------------------------------------------------------------------------------------------------
  1/1/1      3072  14      YES     1       BREAK     1/1/3           3079   PE20


          PE chain information connecting to CB port 1/1/1 [Lag 3072]
             ------------------------------------------------------------------------
             PE Id | Epoch | FSM state |Uplink port|Casc port|Log Block|Prev PE|Next PE
             ------------------------------------------------------------------------
             PE20   14      BREAK       20/2/1      20/2/3    YES       --      --



  ------------------------------------------------------------------------------------------------
  CB Port    Lag  | Epoch |Ring    Id      FSM State|Remote CB port  Lag  |         Chain
  ------------------------------------------------------------------------------------------------
  1/1/3      3079  14      YES     1       BREAK     1/1/1           3072   PE24--PE27


          PE chain information connecting to CB port 1/1/3 [Lag 3079]
             ------------------------------------------------------------------------
             PE Id | Epoch | FSM state |Uplink port|Casc port|Log Block|Prev PE|Next PE
             ------------------------------------------------------------------------
```

```
              PE24   14      BREAK       24/2/1      24/2/3    NO        --      PE27
              PE27   14      BREAK       27/2/1      27/2/3    YES       PE24    --
```

The output of the **show spx ring***id* command shows the ring and all its PE units in "Break" state.

```
ICX 7750# show running-config
Current configuration:
!
ver 08.0.50b559T203
!
stack unit 1
  module 1 icx7750-48-xgf-port-management-module
  module 2 icx7750-qsfp-6port-qsfp-240g-module
  priority 128
  stack-port 1/2/1 1/2/4
stack unit 2
  module 1 icx7750-48-xgf-port-management-module
  module 2 icx7750-qsfp-6port-qsfp-240g-module
  module 3 icx7750-6q-6port-qsfp-240g-module
  priority 128
  stack-port 2/2/4
spx unit 20
  module 1 icx7450-48f-sf-port-management-module
  module 2 icx7400-xgf-4port-40g-module
  module 3 icx7400-xgf-4port-40g-module
  module 4 icx7400-xgf-4port-40g-module
  spx-port 20/2/1
  spx-port 20/2/3
spx unit 24
  module 1 icx7450-48-port-management-module
  module 2 icx7400-xgf-4port-40g-module
  module 3 icx7400-qsfp-1port-40g-module
  module 4 icx7400-qsfp-1port-40g-module
  spx-lag 24/2/1 to 24/2/2
  spx-port 24/2/3
spx unit 27
  module 1 icx7450-48f-sf-port-management-module
  module 2 icx7400-xgf-4port-40g-module
  module 3 icx7400-qsfp-1port-40g-module
  module 4 icx7400-qsfp-1port-40g-module
  spx-port 27/2/1
  spx-port 27/2/3
stack enable
stack rconsole-off
stack mac 609c.9f1f.9900
!
!
!
spx cb-enable
spx cb-configure
  spx-port 1/1/1
  spx-lag  1/1/3 to 1/1/4
  pe-id 1/1/1 20 27 24 1/1/3  <---  No change in configuration
```

As shown in **show running-config** output, the current configuration has not changed.

5. (Optional) To make the ports available as data ports, remove the unused SPX ports or LAGs from the edge PEs in the resulting chain or chains. There will be two unused SPX links if you disconnect the ring between two PE units as in this example.

   NOTE
   If you are planning to re-form the PE ring later, you do not need to remove the unused SPX links.

6. (Optional) To make the underlying ports available as data ports, remove the SPX ports or SPX LAGs that formed the ring with the **no spx-port** or the **no spx-lag** command.

```
ICX 7750# configure terminal
ICX 7750(config)# spx unit 20
ICX 7750(config-spx-unit-20)# no spx-port 20/2/3
spx-port 20/2/3 is removed

ICX 7750(config-spx-unit-20)# spx unit 27
ICX 7750(config-spx-unit-27)# no spx-port 27/2/3
spx-port 27/2/3 is removed

ICX 7750(config-spx-unit-27)# end
ICX 7750# show spx
T=25m14.6: alone: standalone, D: dynamic cfg, S: static
ID   Type          Role    Mac Address    Pri State   Comment
1  S ICX7750-48XGF standby 609c.9f1f.9900 128 remote  Ready
2  S ICX7750-48XGF active  cc4e.246d.9b00 128 local   Ready
20 S ICX7450-48GF  spx-pe  cc4e.246d.10b8 N/A remote  Ready
24 S ICX7450-48G   spx-pe  cc4e.248e.2f90 N/A remote  Ready
27 S ICX7450-48GF  spx-pe  cc4e.246c.f850 N/A remote  Ready

    active       standby
     +---+        +---+
     | 2 |2/4--2/1| 1 |2/4
     +---+        +---+
           +----+
  1/1/1--2/1| 20 |
           +----+

           +----+        +----+
  1/1/3==2/1| 24 |2/3--2/1| 27 |
           +----+        +----+
```

In the example, SPX ports 20/2/3 and 27/2/3 are removed. The output for the **show spx** command shows no connection between PE 20 and PE 27.

7. (Optional) To match the physical configuration, remove the ring from **pe-id** configuration and configure PE chains instead. If needed, first enter the **show spx ring all** and **show spx ring chain** commands for more information.

```
ICX 7750# show spx ring all

  ------------------------------------------------------------------------------
  Ring Id |FSM State |CB port  Lag  |Remote CB port  Lag  |Log Block Link
  ------------------------------------------------------------------------------
```

The output confirms that no PE rings are present in the Campus Fabric topology.

```
ICX 7750# show spx ring chain

  ------------------------------------------------------------------------------------------
                            SPX CB [CASC PORT] CHAINS

  CB Port    Lag  | Epoch |Ring    Id      FSM State|Remote CB port  Lag  |         Chain
  ------------------------------------------------------------------------------------------
  1/1/1      3072  17      NO      0       INIT      INVALID         0      PE20
  1/1/3      3079  17      NO      0       INIT      INVALID         0      PE24--PE27s
```

The output indicates a single cascade PE attached to CB port 1/1/1, and a chain of two PEs, PE 24 and PE 27, attached to CB port 1/1/3.

```
ICX 7750# configure terminal
ICX 7750(config)# spx cb-configure
ICX 7750(config-spx-cb)# pe-id 1/1/1 20

SYSLOG:  SPX SPX Ring Instance 1 is unconfigured (CB1/1/3 - CB1/1/1)
ICX 7750(config-spx-cb)# end
ICX 7750#
```

The example creates **pe-id** configuration 1/1/1 20, which replaces the original pe-id configuration (pe-id 1/1/1 20 27 24 1/1/3), thereby removing the configured ring. Correct **pe-id** configuration for PE 24 and PE 27 will be recreated when the configuration is saved.

8. Enter the **write memory** command to save the configuration.

```
ICX 7750# write memory
Send "write mem" to 3 PEs: 20,24,27

Automatic copy to member units:  1
SPX#
SYSLOG: <14> Apr  2 15:29:17 SPX Security: startup-config was changed by operator from console
Flash Memory Write (8192 bytes per dot)
....
Copy Done.
```

The configuration is saved on the three PE units and on the CB active controller.

9. Confirm removal of the PE ring by entering the **show spx**, **show spx ring all**, and **show running-config** commands.

```
ICX 7750# show spx
T=28m42.0: alone: standalone, D: dynamic cfg, S: static
ID   Type          Role    Mac Address    Pri State   Comment
1  S ICX7750-48XGF standby 609c.9f1f.9900 128 remote  Ready
2  S ICX7750-48XGF active  cc4e.246d.9b00 128 local   Ready
20 S ICX7450-48GF  spx-pe  cc4e.246d.10b8 N/A remote  Ready
24 S ICX7450-48G   spx-pe  cc4e.248e.2f90 N/A remote  Ready
27 S ICX7450-48GF  spx-pe  cc4e.246c.f850 N/A remote  Ready

    active       standby
     +---+        +---+
     | 2 |2/4--2/1| 1 |2/4
     +---+        +---+
           +----+
  1/1/1--2/1| 20 |
           +----+

           +----+        +----+
  1/1/3==2/1| 24 |2/3--2/1| 27 |
           +----+        +----+
```

The topology shows a single PE (PE 20) and a PE chain formed by PE 24 and PE 27.

```
ICX 7750# show spx ring all

  ------------------------------------------------------------------------------------
  Ring Id |FSM State |CB port  Lag  |Remote CB port  Lag  |Log Block Link
  ------------------------------------------------------------------------------------
```

The output from the **show spx ring all** command shows no PE rings in the Campus Fabric domain.

```
SPX# show running-config
Current configuration:
!
ver 08.0.50b559T203
!
stack unit 1
  module 1 icx7750-48-xgf-port-management-module
  module 2 icx7750-qsfp-6port-qsfp-240g-module
  priority 128
  stack-port 1/2/1 1/2/4
stack unit 2
  module 1 icx7750-48-xgf-port-management-module
  module 2 icx7750-qsfp-6port-qsfp-240g-module
  module 3 icx7750-6q-6port-qsfp-240g-module
  priority 128
  stack-port 2/2/4
spx unit 20
  module 1 icx7450-48f-sf-port-management-module
  module 2 icx7400-xgf-4port-40g-module
  module 3 icx7400-xgf-4port-40g-module
  module 4 icx7400-xgf-4port-40g-module
  spx-port 20/2/1
spx unit 24
  module 1 icx7450-48-port-management-module
  module 2 icx7400-xgf-4port-40g-module
  module 3 icx7400-qsfp-1port-40g-module
  module 4 icx7400-qsfp-1port-40g-module
  spx-lag 24/2/1 to 24/2/2
  spx-port 24/2/3
spx unit 27
  module 1 icx7450-48f-sf-port-management-module
  module 2 icx7400-xgf-4port-40g-module
  module 3 icx7400-qsfp-1port-40g-module
  module 4 icx7400-qsfp-1port-40g-module
  spx-port 27/2/1
stack enable
stack rconsole-off
stack mac 609c.9f1f.9900
```

```
!
!
!
spx cb-enable
spx cb-configure
  spx-port 1/1/1
  spx-lag  1/1/3 to 1/1/4
  pe-id 1/1/1 20     <--- pe-id is split.
  pe-id 1/1/3 24 27  <--- pe-id is split.

!
```

The current configuration now matches the saved (as well as the physical) configuration and shows the PE ID configuration is broken out, with PE 20 connected at CB SPX port 1/1/1 and PEs 24 and 27 connected to the CB through an SPX LAG (ports 1/1/3 and 1/1/4).

Configuring SPX ports and LAGs on a live system

You can create, modify, or remove an SPX LAG or link in a live configuration.

To prevent connection issues, the **multi-spx-lag** command changes both ends of a live CB-to-PE or PE-to-PE link at the same time to form an SPX LAG. The **multi-spx-port** command transforms a live SPX LAG into a single-port SPX link. Both the **multi-spx-port** and **multi-spx-lag** commands are available in SPX CB configuration mode and SPX unit configuration modes.

NOTE
The system blocks the **multi-spx-port** or **multi-spx-lag** command if the command would make any PE unreachable.

For more information on SPX LAG formation and using port lists, refer to Differences in Campus Fabric configuration practices on page 42.

NOTE
Removing a live SPX port is not supported because it would break a chain of PE units, or it wold break a ring of PE units into two chains. If you want to break a ring of PEs, you need to physically disconnect the links.

The following example changes a live SPX LAG to a live link between CB unit 3 and PE unit 24.

```
ICX7750-26Q Router# configure terminal
ICX7750-26Q Router(config)# spx cb-config
ICX7750-20Q Router(config-spx-cb)# multi-spx-port 3/1/8 and 24/4/1
spx-lag 3/1/6 3/1/8  is replaced by spx-port 3/1/8.
spx-lag 24/3/1 24/4/1 is replaced by spx-port 24/4/1.
```

The following example creates a live SPX LAG between PE unit 17 and PE unit 24 as part of configuring PE unit 24 from the CB in SPX unit configuration mode.

```
ICX7750-20Q Router# configure terminal
ICX7750-20Q Router(config)# spx unit 24
ICX7750-20Q Router(config-spx-unit-24)# multi-spx-lag 24/2/1 to 24/2/2 and 17/2/1 17/2/2
spx-port 17/2/1 is replaced by spx-lag 17/2/1 to 17/2/2.
spx-port 24/2/1 is replaced by spx-lag 24/2/1 to 24/2/2.
```

Campus Fabric (SPX) image upgrade

Any unit that is part of a Campus Fabric domain is automatically updated with the correct image if an image mismatch within the same major version occurs.

NOTE
A PE candidate can be discovered and added to the Campus Fabric Domain by the zero-touch or the SPX interactive-setup utility; however, because Campus Fabric requires a router image, the new device will initially be in a non-operational state due to an image mismatch. If **tftp-server** is configured and **image-auto-copy** is not disabled, the CB will download a router image to a non-operational PE unit. The PE reloads, joins the Campus Fabric domain, and becomes operational.

NOTE
If the CB and PE are running different IPC versions, for example, FastIron 08.0.30 and FastIron 08.0.40, then the auto image copy process cannot copy the image.

When an image mismatch occurs in a traditional stack, the active controller (master unit) copies its own image to the mismatched units. As part of a CB stack, CB units can be updated in the same way. However, in a Campus Fabric domain, the CB and PE require different images. In addition, the PE image cannot be stored on an ICX 7750 stack unit.

To copy the image of a PE in a Campus Fabric domain, the auto image copy process accesses the correct PE image on a TFTP server. If the correct image is found on the server, it is downloaded to the mismatched unit. Once the correct image has been copied, the mismatched unit is reloaded to activate the new image. If more than one PE unit is being updated, all mismatched units are reloaded at the same time. When the auto image copy process is complete, all units are up to date and available.

Commands are provided to configure the TFTP server. If no TFTP server has been configured when a mismatch occurs, you are prompted to provide the IP address for the server. If the server cannot be reached or if the correct image cannot be found, the unit or units remain in an image mismatch state until you manually copy the image from an external server.

Auto image copy considerations

- The process does not execute if the running image and corresponding flash image are not the same.
- The process is not triggered if the major versions of the mismatched units are not the same.
- The process may run more than once if stack units are placed in nonoperational mode at different times.

Disabling or re-enabling the auto image copy process for a Campus Fabric (SPX) configuration

The auto image copy process is enabled by default but may be disabled.

You can use the **image-auto-copy disable** command to disable automatic image updates if you want to run different software versions on different units of a stack. This can be useful, for example, if you want to try out a Ruckus patch image on just one unit.

1. Check whether the auto image copy process is enabled by using the **show stack detail** command at the Privileged EXEC level on the stack active controller.

   The auto image copy process is disabled in the following **show stack detail** command output for an ICX 7750 traditional stack.

```
ICX7750-48C Router(config)# show stack detail
T=26m23.4: alone: standalone, D: dynamic cfg, S: static
ID   Type          Role    Mac Address    Pri State   Comment
1  S ICX7750-48XGF member  0000.0000.0000   0 reserve
2  S ICX7750-20QXG standby 748e.f8f9.6700 255 remote  Ready
3  S ICX7750-48XGC active  cc4e.2438.6a80 255 local   Ready

    standby      active
     +---+        +---+
  2/1| 2 |2/4--2/1| 3 |2/4
     +---+        +---+
Standby u2 - No hitless failover. Reason: hitless-failover not configured
Current stack management MAC is cc4e.2438.6a80

Image-Auto-Copy is Disabled.

      Stack Port Status                       Neighbors
Unit# Stack-port1         Stack-port2         Stack-port1         Stack-port2
2     dn (2/2/1)          up (2/2/4)          none                U3 (3/2/1)
3     up (3/2/1)          dn (3/2/4)          U2 (2/2/4)          none

Unit# System uptime
2     23 minute(s) 53 second(s)
3     26 minute(s) 23 second(s)
```

2. To re-enable auto image copy, enter the **no image-auto-copy disable** command in global configuration mode on the active controller as shown in the following example.

```
ICX7750-48C Router(config)# no image-auto-copy disable
Image mismatch Auto Copy enabled

SYSLOG: <14> Jan 11 02:51:04 System: Image mismatch Auto Copy Enabled
```

Configuring a TFTP server for Campus Fabric (SPX) auto image copy

You can designate a TFTP server from which the auto image copy process downloads the correct PE image to a mismatched unit.

The requisite PE image must be stored on an accessible TFTP server, and the auto image copy process must be enabled for the Campus Fabric domain.

The IP address of the TFTP server can be configured in advance, or you can provide the IP address when prompted during the auto image copy process if it has not been pre-configured.

1. Enter global configuration mode.

```
device# configure terminal
```

2. Run the **tftp-server** command. The following example designates the image location on the server with the IP address 10.70.42.172 in the builds folder under the server directory.

```
device(config)# tftp-server 10.70.42.172 image-location /server/builds/
```

Manual upgrade of Campus Fabric (SPX) images using a manifest file

Manifest files are prepared for every release. They contain and list all boot, firmware, and application images as well as signature files. A manifest file also specifies a relative directory path to the images.

You can use a manifest file to perform a manual upgrade of the Campus Fabric domain when required, for example, if a major image mismatch is detected or if the auto image copy process has not been configured or could not be executed. Using a single command, you can trigger multiple downloads or image copies and upgrade all core stack and PE units in the Campus Fabric domain.

1. On the active controller, enter the **copy tftp system-manifest** command followed by the IP address of the TFTP server and the name of the manifest file. If you don't specify a partition, the files are copied to both primary and secondary flash. The following command options are available.
   - Copy the image binary files to primary or secondary flash only:

     copy tftp system-manifest *server-ip-address manifest-filename* [**primary** | **secondary**]

     ```
     device# copy tftp system-manifest 10.70.42.172 stage/FI08040_Manifest.txt primary
     ```
   - Copy all image binary files to primary or secondary flash (when you need to download boot images along with application images):

     copy tftp system-manifest *server-ip-address manifest-filename* [**all-images-primary** | **all-images-secondary**]

     ```
     device# copy tftp system-manifest 10.70.42.172 stage/FI08040_Manifest.txt all-images-primary
     ```

   Once the images are installed on the system, you are prompted to reload the system for the new images to take effect.
2. Enter the **write memory** command, followed by a **reload** command.

   The specified images are loaded to all Campus Fabric CB and PE units.

The following example downloads all boot and application images for FastIron 08.0.40 from the TFTP server.

```
device# copy tftp system-manifest 10.70.42.172 stage/FI08040_Manifest.txt all-images-secondary

You are about to download boot image and boot signature image as well, ARE YOU SURE?(enter 'y' or 'n'): y
device#Flash Memory Write (8192 bytes per dot)
DOWNLOADING MANIFEST FILE   Done.
device#Flash Memory Write (8192 bytes per dot)
Automatic copy to member units:  3

COPY ICX7750 SIGNATURE TFTP to Flash Done
 device#Load to buffer (8192 bytes per dot)
Automatic copy to member units:  3
...
SYNCING IMAGE TO FLASH. DO NOT SWITCH OVER OR POWER DOWN THE UNIT(8192 bytes per dot)...
...
Copy ICX7750 from TFTP to Flash Done.
device#Flash Memory Write (8192 bytes per dot)
Automatic copy to member units:  3
...
DOWNLOAD OF ICX7750 BOOT SIGNATURE  Done.
device#Load to buffer (8192 bytes per dot)
Automatic copy to member units:  3
...
SYNCING IMAGE TO FLASH. DO NOT SWITCH OVER OR POWER DOWN THE UNIT(8192 bytes per dot)...
...
ICX7750 Boot IMAGE COPY IS DONE
 device#Load to buffer (8192 bytes per dot)
Automatic copy to member units: 17 18
...
PLEASE WAIT. MEMBERS SYNCING IMAGE TO FLASH. DO NOT SWITCH OVER OR POWER DOWN THE UNIT... Done.
device#Load to buffer (8192 bytes per dot)
Automatic copy to member units: 17 18
...
PLEASE WAIT. MEMBERS SYNCING IMAGE TO FLASH. DO NOT SWITCH OVER OR POWER DOWN THE UNIT...
  Manifest image download is complete, please reload the system
```

The following example copies the binary image for the FastIron 08.0.40 manifest file to secondary flash from the TFTP server.

```
device# copy tftp system-manifest 10.70.42.172 stage/FI08040_Manifest.txt secondary
device# Flash Memory Write (8192 bytes per dot) .....
DOWNLOADING MANIFEST FILE   Done.
device#Flash Memory Write (8192 bytes per dot)
Automatic copy to member units:  3
...
COPY ICX7750 SIGNATURE TFTP to Flash Done
 device# Load to buffer (8192 bytes per dot)
Automatic copy to member units:  3
...
SYNCING IMAGE TO FLASH. DO NOT SWITCH OVER OR POWER DOWN THE UNIT(8192 bytes per dot)...
...
Copy ICX7750 from TFTP to Flash Done.
device#Load to buffer (8192 bytes per dot)
Automatic copy to member units: 17 18
...
PLEASE WAIT. MEMBERS SYNCING IMAGE TO FLASH. DO NOT SWITCH OVER OR POWER DOWN THE UNIT...
Copy ICX7450 from TFTP to Flash Done.

Manifest file upgrade done, please reload the system
```

Unconfiguring the CB stack or PE units

The **spx unconfigure** command can be used to convert PE units to regular switches or routers or to remove SPX configuration from all CB and PE units.

Removing SPX configuration from PE units

You can remove SPX configuration from a PE unit locally using the **spx unconfigure me** command. The **spx unconfigure me** command removes the PE startup file from the PE unit on which the command is issued. The startup configuration file for regular mode is not affected. If the PE is in PE mode (with a prompt prefix of `[PE]`), it reloads. A device in regular mode or in Provisional-PE mode (with a `[Provisional-PE]` prefix on the prompt) does not reload.

You can also remove PE configuration from the CB using the PE ID in the **spx unconfigure** *id* command. This form of the command can be entered only from the CB. The command removes the PE startup file of the specified PE and reloads the unit as a switch or router from the regular startup file.

The following example shows system response when the **spx unconfigure me** command is entered on an active PE.

```
[PE]local-19@ICX7450-24 Router# spx unconfigure me
This unit will remove the PE startup file and reload as a standalone. Are you sure? (enter 'y' or 'n'): y
remove PE startup file
[PE]local-19@ICX7450-24 Router#Halt and reboot from Primary: reason=unconfigure
Sent SIGTERM to all processes
Sent SIGKILL to all processes
Requesting system reboot
Restarting system.


Ruckus Wireless Bootloader: 10.1.06b002T215 (Sep 10 2015 - 06:30:05)

Validate Shmoo parameters stored in flash ..... OK
Restoring Shmoo parameters from flash .....
Running simple memory test ..... OK
 ICX7450-24 Copper (Non-POE), P2
SYS CPLD VER: 0x10, Released Ver: 0

Enter 'b' to stop at boot monitor:  0
bootdelay: ===
Booting image from Primary
................................................................................................................
................................................................................................................
................................................................................................................
...## Booting kernel from Legacy Image at 70000200 ...
   Image Name:   Image
ARM Linux Kernel Image (gzip compressed)
   Data Size:    24091093 Bytes =    Load Address: 61008000
   Entry Point:  61008000
   Verifying Checksum ... OK
   Uncompressing Kernel Image ... OK

Starting kernel ...

SP's eUSB-Infra Called
 Number of eUSB partitions 3 ...
PLATFORM SP
Config partition mounted.
eUSB flash drive is ready
No External USB Drive(s) Mounted .
Creating TUN device
*** Crash dump information is available, please collect it using "supportsave" CLI ***
Starting the FastIron.
FIPS Disabled:PORT NOT DISABLED
platform type 70
OS>Applying factory defaults..
```

```
INFO: empty config data in the primary area, try to read from backup
INFO: empty config data in the backup area also
INFO: startup config data is not available, try to read from backup
INFO: startup config data in the backup area is not available
set_board_level: gi_board_type = 98SOC unit 0 attached to PCI device BCM56548_A0
u=0 p=50 Using SDK PHY driver for BCM84756/7/9
u=0 p=51 Using SDK PHY driver for BCM84756/7/9
u=0 p=52 Using SDK PHY driver for BCM84756/7/9
u=0 p=53 Using SDK PHY driver for BCM84756/7/9
Initializing the parallel detect
Setting the CMIC registers for the lINK SCAN
Pre Parsing Config Data ...
INFO: empty config data in the primary area, try to read from backup
INFO: empty config data in the backup area also

Parsing Config Data ...
INFO: empty config data in the primary area, try to read from backup
INFO: empty config data in the backup area also

Hotplugger Daemon Initialized ..
System initialization completed...console going online.
  Copyright (c) 1996-2015 Ruckus Wireless Communications Systems, Inc. All rights reserved.
    UNIT 1: compiled on Nov  2 2015 at 02:36:32 labeled as SPR08040b739
      (24091669 bytes) from Primary SPR08040b739.bin
        SW: Version 08.0.40b739T213
      Compressed Boot-Monitor Image size = 786944, Version:10.1.06T215 (spz10106b002)
       Compiled on Thu Sep 10 13:30:24 2015

  HW: Stackable ICX7450-24
  Internal USB: Serial #: 9900614021300109
      Vendor: ATP Electronics, Total size = 1919 MB
==========================================================================
UNIT 1: SL 1: ICX7450-24 24-port Management Module
      Serial  #:CYT3316K00P
      License: ICX7450_L3_SOFT_PACKAGE   (LID: eavIIGLmFFr)
      License Compliance: ICX7450-PREM-LIC-SW is Compliant
      P-ASIC  0: type B548, rev 01  Chip BCM56548_A0
==========================================================================
UNIT 1: SL 2: ICX7400-4X10GF 4-port 40G Module
      Serial  #:CYV3332K034
==========================================================================
UNIT 1: SL 3: ICX7400-1X40GQ 1-port 40G Module
      Serial  #:CYX3315K03N
==========================================================================
UNIT 1: SL 4: ICX7400-1X40GQ 1-port 40G Module
      Serial  #:CYX3315K01P
==========================================================================
 1000 MHz ARM processor ARMv7 88 MHz bus
 8192 KB boot flash memory
 2048 MB code flash memory
 2048 MB DRAM
STACKID 1  system uptime is 27 second(s)
The system : started=warm start   reloaded=by "reload"

ICX7450-24 Router>
Optics detected on 1/2/1
 Optics detected on 1/2/2
 Optics detected on 1/2/3
 Optics detected on 1/4/1

ICX7450-24 Router>
Power supply 1  detected.
Power supply 1  is up.
Stack unit 1 Power supply 1 is up
```

Removing SPX configuration from all units

The **spx unconfigure all** command can be issued only on a CB. This form of the command removes the SPX startup file of every PE and CB unit in the Campus Fabric domain. It also reloads all PE units. The CB unit from which the command is issued and other CB units in the domain are not reloaded.

The following example removes all SPX configuration from all units.

```
ICX7750-48F Router# spx unconfigure all
Will remove all spx unit PE startup files and reload them. Are you sure? (enter 'y' or 'n'): y
Sent unconfigure messages to spx unit 17 18
ICX7750-48F Router#T=3h36m32.3: spx-port 2/1/41 goes down

SYSLOG: <14> Nov  2 12:24:19 System: Interface ethernet 2/1/41, state down
T=3h36m33.4: Active unit 1 deletes u17 but keeps its static config.
delete reason: Port 2/1/41 is down.
T=3h36m33.4: spx-port 17/2/4 goes down
T=3h36m33.4: spx-lag 17/1/1 goes down
T=3h36m33.5: spx-lag 17/1/2 goes down
T=3h36m33.5: Active unit 1 deletes u18 but keeps its static config.
delete reason: Port 2/1/41 is down.
T=3h36m33.5: spx-lag 18/1/1 goes down
T=3h36m33.5: spx-lag 18/1/2 goes down
```

Removing stacking configuration

NOTE
It is not necessary to remove stacking configuration before enabling a PE unit. However, if stacking is enabled on the unit, it must be disabled before the PE is enabled and configured.

Because PE units do not participate in the stack election process, startup configuration is never synched to these units. As a result, the regular startup configuration file never changes when a PE unit becomes part of a Campus Fabric domain, and the configuration is available later if the PE unit is converted to regular mode.

For more information on unconfiguring a stack unit, refer to the *Ruckus FastIron Stacking Configuration Guide*.

CB stack merges and breaks

CB stacks merge and break much like traditional stacks.

CB stack merges

When two CB stacks merge, they behave according to the rules governing stack merges described in the *Ruckus FastIron Stacking Configuration Guide*. The active controller that loses the new controller election reboots. The PE groups from the losing stack join the winning CB stack, and PE units are initialized.

CB stack breaks

if hitless-failover is enabled and the active controller leaves the CB stack, the standby controller takes over immediately.

When a CB stack breaks, two CB stacks may form if the units that break away include a standby controller. In this case, the standby takes control to form a stack or a standalone. Each stack owns any PE unit directly connected to the stack. Each stack removes any live PE unit that is not linked to the stack. The old active controller for the CB owns any PE unit that has LAG ports connected to both stacks.

Refer to the *Ruckus FastIron Stacking Configuration Guide* for detailed information on traditional stack breaks and merges.

Displaying Campus Fabric (SPX) information

A number of **show** commands simultaneously provide stack and Campus Fabric information, alternate regular mode configuration information for an enabled SPX unit, and detailed information on the entire Campus Fabric domain.

SPX information in show running-config output

The **show running-config** command displays information on any SPX configuration that is present.

Enter **show running-config** at the device level on the active controller of the CB stack to display both stack and SPX information.

The following example shows that a CB is enabled and configured. Stack unit 2 has a connection configured for PE unit 17, with two SPX ports, and PE unit 18, with an SPX port and a two-port LAG. SPX ports and LAGs are configured on both CB stack members. SPX port 1/2/1 has been given the PE group name bld1-floor2. Using the PE group name, the same port has been configured to connect to PE unit 18, if the joining PE matches the configuration shown under SPX unit 18. CB SPX port 2/2/1 has been configured to assign PE ID 20 to a PE that joins on that port.

```
ICX7750-26Q Router# show running-config
Current configuration:
!
ver 08.0.40b1T203
!
stack unit 1
module 1 icx7750-20-qxg-port-management-module
module 2 icx7750-qsfp-6port-qsfp-240g-module
module 3 icx7750-6q-6port-qsfp-240g-module
stack-port 1/2/4
stack unit 2
module 1 icx7750-20-qxg-port-management-module
module 2 icx7750-qsfp-6port-qsfp-240g-module
module 3 icx7750-6q-6port-qsfp-240g-module
stack-port 2/2/4
spx unit 17
module 1 icx7450-24-port-management-module
module 2 icx7400-xgf-4port-40g-module
spx-port 17/3/1
spx-port 17/4/1
spx unit 18
module 1 icx7750-20-qxg-port-management-module
module 2 icx7750-qsfp-6port-qsfp-240g-module
module 3 icx7750-6q-6port-qsfp-240g-module
spx-lag 18/1/9 to 18/1/10
spx-port 18/2/4
stack enable
stack mac cc4e.2438.7280
!
!
spx cb-enable
spx cb-config
spx-port 1/1/10
spx-port 1/2/1 pe-group bld1-floor2
spx-port 2/2/1
spx-lag 1/1/15 1/1/17 to 1/1/18 pe-group engineering
spx-lag 2/1/10 to 2/1/11 2/1/15
pe-id bld1-floor2 18
spx pe-id 2/2/1 20
!
```

SPX information in show configuration command output

In regular switch or router mode, the **show configuration** command shows the saved startup configuration. In PE or Provisional-PE mode, the **show configuration** command shows the configuration in the PE startup file for the unit.

> **NOTE**
> To view the startup configuration that the unit would have in regular mode (as a switch or router), use the **show startup-config** command instead.

The following example shows the configuration for a provisional PE that has been enabled with the **spx pe-enable** command.

```
[Provisional-PE]ICX7450-48F Router# show configuration
Configuration in PE startup file:
!
ver 08.0.40b1T213
!
spx pe-enable
spx unit 1
module 1 icx7450-48f-sf-port-management-module
module 2 icx7400-xgf-4port-40g-module
module 4 icx7400-qsfp-1port-40g-module
spx-lag 1/2/1 to 1/2/2
spx-port 1/2/4
```

Displaying regular mode configuration from a PE unit

The **show startup-config** command displays the configuration a PE or provisional PE would have in regular mode as a switch or router.

The following example displays the configuration this active PE would have if it were returned to regular mode.

```
[PE]local-18@ICX7450-24 Router# show startup-config
*** display startup configuration used in switch/router (not PE) ***
!
Startup-config data location is flash memory
!
Startup configuration:
!
ver 08.0.40b739T213
!
stack unit 1
  module 1 icx7450-24-port-management-module
  module 2 icx7400-xgc-4port-40g-module
  module 3 icx7400-qsfp-1port-40g-module
  module 4 icx7400-qsfp-1port-40g-module
!
!
interface management 1
ip address 10.20.226.194 255.255.255.0
!
interface ethernet 1/2/1
speed-duplex 10G-full
!
interface ethernet 1/2/2
speed-duplex 10G-full
!
interface ethernet 1/2/3
speed-duplex 10G-full
!
interface ethernet 1/2/4
speed-duplex 10G-full
!
!
End
```

NOTE
To view the configuration stored in the PE startup file, use the **show configuration** command instead. The **show configuration** command can also be used in regular mode to show the saved startup configuration.

Displaying information with the show spx command

Enter the **show spx** command on the active controller to display information on the Campus Fabric topology.

The **show spx** command output in the following example shows a two-member ICX 7750 CB stack with one attached ICX 7450 PE unit, PE 17. The command was entered on the active controller, and the second stack member is available to take over as the standby.

```
ICX7750-26Q Router# show spx
T=3h24m20.3: alone: standalone, D: dynamic cfg, S: static
ID  Type          Role    Mac Address    Pri  State Comment
1 S ICX7750-20QXG active  cc4e.2438.7280 0   local  Ready
3 S ICX7750-20QXG standby 748e.f8f9.6300 0   remote Ready
17 S ICX7450-48GF spx-pe  cc4e.246c.f190 N/A remote Ready
active       standby
+---+        +---+
| 1 |2/4--2/1| 3 |
+---+        +---+
          +----+
1/1/5--4/1| 17 |
          +----+
```

Enter the **show spx** command on a PE unit to display local information as shown in the following example. The "S" after the PE ID (17) indicates that the configuration for this PE has been saved (is "static").

```
[PE]local-17@ICX7450-48F Router# show spx
T=53m13.0: alone: standalone, D: dynamic cfg, S: static
ID   Type         Role   Mac Address    Pri State Comment
17 S ICX7450-48GF spx-pe cc4e.246c.f190 N/A remote Ready
    +----+
-4/1| 17 |
    +----+
```

You can add a parameter to the **show spx** command to display information about different aspects of the Campus Fabric topology.

```
ICX7750-20Q Router# show spx ?
  cb-port           Displays PEs attached to this port
  connections       Displays PE port to port connectivity
  csp               Displays CSP information
  debug             Displays SPX Debug commands
  lag               Displays spx-lag information
  mecid             Displays Dot1br Multicast ECID information
  multicast         Multicast related information
  pe-group          Displays PEs in a pe group
  pe-id             Displays this PE
  ring              SPX Ring infra information
  zero-touch ipc    Displays statistics for zero-touch ipc
  zero-touch log    Displays internal zero-touch log
  zero-touch status Displays current zero-touch status
```

Enter the **show spx cb-port** command to display a list of PE units attached to the port.

```
ICX7750-48F Router# show spx cb
  cb-port     Displays PEs attached to this port
ICX7750-48F Router#show spx cb-port 2/1/7
Show PEs attached to a CB port 2/1/7
T=3h46m16.0: alone: standalone, D: dynamic cfg, S: static
ID   Type          Role    Mac Address    Pri State   Comment
1  S ICX7750-48XGF active  cc4e.2438.7e80 128 local   Ready
```

```
2  S ICX7750-48XGF standby cc4e.246e.cd80 128 remote  Ready
19 S ICX7450-24G   spx-pe  cc4e.246c.e420 N/A remote  Ready



    standby      active
     +---+        +---+
  2/4| 2 |2/1--2/1| 1 |2/4
     +---+        +---+

            +----+
  2/1/7--2/3| 19 |
            +----+

ICX7750-48F Router#
```

Enter the **show spx mecid** command to display Multicast E-CID (ME-CID) information for the Campus Fabric domain.

The following example uses the keyword **allocated** to display information on allocated ME-CIDs.

```
ICX7750-48F Router# show spx mecid allocated
FSM-State : CREATE_P - created TX Pending, DELETE_P - deleted TX Pending
            DELETE_AW - Ack Waiting, CREATED - Stable State
Total MECID Allocated 2
-----------------------------------------------------
SNo   MECID PEs VPs  AW  State      Shr Elements
-----------------------------------------------------
1     4096  3   114  0   CREATED    No  {17/1/1 17/1/2 17/1/3 17/1/4 17/1/5 17/1/6 17/1/7 ...}
2     4097  3   11   0   CREATED    No  {17/1/1 17/1/2 17/1/3 17/2/3 17/2/4 18/1/1 18/1/2 ...}
```

The following command shows information for a specific ME-CID (4096).

```
ICX7750-48F Router# show spx mecid 4096
MECID State : CREATE_P - created Tx Pending, DELETE_P - deleted Tx Pending
              DELETE_AW - Ack Waiting, CREATED - Stable State
VP State    : ADD_P - Added Tx Pending, REMOVE_P - Removed Tx waiting
            : ADDED - Stable State
MECID: 4096 Total PEs: 3, Epoch: 0, FSM State: CREATED, SetId: 0x0, AW: 0
   1. PE: 17, Total VPs: 54, Ack_waiting: 0, CP Added: Yes
      (17/1/1 (cp) ADDED),  (17/1/2 (cp) ADDED),  (17/1/3 (cp) ADDED),  (17/1/4  ADDED),  (17/1/5  ADDED),
      (17/1/6  ADDED),  (17/1/7  ADDED),  (17/1/8  ADDED),  (17/1/9  ADDED),  (17/1/10 ADDED),
      (17/1/11 ADDED),  (17/1/12 ADDED),  (17/1/13 ADDED),  (17/1/14 ADDED),  (17/1/15 ADDED),
      (17/1/16 ADDED),  (17/1/17 ADDED),  (17/1/18 ADDED),  (17/1/19 ADDED),  (17/1/20 ADDED),
      (17/1/21 ADDED),  (17/1/22 ADDED),  (17/1/23 ADDED),  (17/1/24 ADDED),  (17/1/25 ADDED),
      (17/1/26 ADDED),  (17/1/27 ADDED),  (17/1/28 ADDED),  (17/1/29 ADDED),  (17/1/30 ADDED),
      (17/1/31 ADDED),  (17/1/32 ADDED),  (17/1/33 ADDED),  (17/1/34 ADDED),  (17/1/35 ADDED),
      (17/1/36 ADDED),  (17/1/37 ADDED),  (17/1/38 ADDED),  (17/1/39 ADDED),  (17/1/40 ADDED),
      (17/1/41 ADDED),  (17/1/42 ADDED),  (17/1/43 ADDED),  (17/1/44 ADDED),  (17/1/45 ADDED),
      (17/1/46 ADDED),  (17/1/47 ADDED),  (17/1/48 ADDED),  (17/2/1  ADDED),  (17/2/2  ADDED),
      (17/2/3  ADDED),  (17/2/4  ADDED),  (17/3/1  ADDED),  (17/4/1  ADDED),
   2. PE: 18, Total VPs: 30, Ack_waiting: 0, CP Added: No
      (18/1/1  ADDED),  (18/1/2  ADDED),  (18/1/3  ADDED),  (18/1/4  ADDED),  (18/1/5  ADDED),
      (18/1/6  ADDED),  (18/1/7  ADDED),  (18/1/8  ADDED),  (18/1/9  ADDED),  (18/1/10 ADDED),
      (18/1/11 ADDED),  (18/1/12 ADDED),  (18/1/13 ADDED),  (18/1/14 ADDED),  (18/1/15 ADDED),
      (18/1/16 ADDED),  (18/1/17 ADDED),  (18/1/18 ADDED),  (18/1/19 ADDED),  (18/1/20 ADDED),
      (18/1/21 ADDED),  (18/1/22 ADDED),  (18/1/23 ADDED),  (18/1/24 ADDED),  (18/2/1  ADDED),
      (18/2/2  ADDED),  (18/2/3  ADDED),  (18/2/4  ADDED),  (18/3/1  ADDED),  (18/4/1  ADDED),

   3. PE: 19, Total VPs: 30, Ack_waiting: 0, CP Added: No
      (19/1/1  ADDED),  (19/1/2  ADDED),  (19/1/3  ADDED),  (19/1/4  ADDED),  (19/1/5  ADDED),
      (19/1/6  ADDED),  (19/1/7  ADDED),  (19/1/8  ADDED),  (19/1/9  ADDED),  (19/1/10 ADDED),
      (19/1/11 ADDED),  (19/1/12 ADDED),  (19/1/13 ADDED),  (19/1/14 ADDED),  (19/1/15 ADDED),
      (19/1/16 ADDED),  (19/1/17 ADDED),  (19/1/18 ADDED),  (19/1/19 ADDED),  (19/1/20 ADDED),
      (19/1/21 ADDED),  (19/1/22 ADDED),  (19/1/23 ADDED),  (19/1/24 ADDED),  (19/2/1  ADDED),
      (19/2/2  ADDED),  (19/2/3  ADDED),  (19/2/4  ADDED),  (19/3/1  ADDED),  (19/4/1  ADDED),
```

The following example shows a summary of configuration options and statistics on ME-CID activity in the Campus Fabric domain.

```
ICX7750-48F Router# show spx mecid summary
  Manager Init          : Yes        Replication Group Sharing : No
  Use PE CSP for TX     : Yes        Epoch                     : 0
```

```
  Reconciliation Pass   : 0          Replication Id           : 0
  ECID Partition        : Enabled    Global Timer running     : No
  ECID sharing          : No
DEFAULT    4096    16383   12288   LRU
SWITCHING  4096    8191    4096    ACENDING
ROUTING    8192    16383   8192    DECENDING
  ------------------------------------------------------------------------------
                     alloc in-use  avail get-fail    limit  get-mem  size init
  ------------------------------------------------------------------------------
  MECID info           1000      2    998        0   232000        3    66 1000
  PE info               400      6    394        0    92800       12    52  400
  VP info             10000    125   9875        0  2320000      255    32 1000
  TX Q                 1000      0   1000        0   232000       31    12 1000
  PE Msg               1024      0   1024        0   237568       78    56 1024

  Total memory in used: 476144 bytes
ICX7750-48F Router#
ICX7750-48F Router# show spx mecid topology
Total Cascade Port(CP): 2
   1. CP-TR(e2/1/41)  :-->[e17/2/4]PE_17[TR(e17/1/1)]-->[TR(e18/1/1)]PE_18

   2. CP-TR(e2/1/7)   :-->[e19/2/3]PE_19
```

Enter the **show spx pe-group** command followed by the group name to display a list of PE units in a PE group.

```
ICX7750-48F Router# show spx pe-group GROUP1
Show PEs attached to pe-group GROUP1 (port 2/1/41)
T=17h57m5.5: alone: standalone, D: dynamic cfg, S: static
ID   Type          Role    Mac Address    Pri State   Comment
1  S ICX7750-48XGF active  cc4e.2438.7e80 128 local   Ready
2  S ICX7750-48XGF standby cc4e.246e.cd80 128 remote  Ready
17 S ICX7450-48P   spx-pe  cc4e.248b.da60 N/A remote  Ready
18 S ICX7450-24G   spx-pe  cc4e.246c.e3f8 N/A remote  Ready

    standby      active
     +---+        +---+
  2/4| 2 |2/1--2/1| 1 |2/4
     +---+        +---+

           +----+        +----+
 2/1/41--2/4| 17 |1/1==1/1| 18 |
           +----+        +----+
```

Enter the **show spx pe-id** command followed by the PE number to display information for a specific PE.

```
ICX7750-48F Router# show spx pe-id 17
Show the sub-stack containing spx unit 17
T=3h51m3.8: alone: standalone, D: dynamic cfg, S: static
ID   Type          Role    Mac Address    Pri State   Comment
1  S ICX7750-48XGF active  cc4e.2438.7e80 128 local   Ready
2  S ICX7750-48XGF standby cc4e.246e.cd80 128 remote  Ready
17 S ICX7450-48P   spx-pe  cc4e.248b.da60 N/A remote  Ready
18 S ICX7450-24G   spx-pe  cc4e.246c.e3f8 N/A remote  Ready

    standby      active
     +---+        +---+
  2/4| 2 |2/1--2/1| 1 |2/4
     +---+        +---+

           +----+        +----+
 2/1/41--2/4| 17 |1/1==1/1| 18 |
           +----+        +----+
```

Enter the **show spx ring** command with the desired parameter to show information for a specific ring, for all rings, or for PE chains in the Campus Fabric domain.

The following example displays all rings in the Campus Fabric domain.

```
ICX7750-48F Router# show spx ring all
```

```
  ------------------------------------------------------------------------------
  Ring Id |FSM State |CB port  Lag  |Remote CB port  Lag  |Log Block Link
  ------------------------------------------------------------------------------
  1        ACTIVE     1/1/2    3072  1/1/3           3073   PE29x--xCB1/1/3
  2        ACTIVE     3/1/19   3076  3/1/45          3078   CB3/1/19x--xPE26
  3        ACTIVE     2/1/12   3075  3/1/31          3077   PE27x--xPE28
  4        ACTIVE     1/1/5    3079  2/1/9           3074   PE19x--xPE20
```

The following example displays information for a specific ring. Ring IDs can be derived from the **show spx ring all** command.

```
ICX7750-48F SPX# show spx ring  2

  ------------------------------------------------------------------------------
  Ring Id |FSM State |CB port  Lag  |Remote CB port  Lag  |Log Block Link
  ------------------------------------------------------------------------------
  2        ACTIVE     3/1/19   3081  3/1/45          3083   PE26x--xPE25

CB chains Information:


-------------------------------------------------------------------------------------------------
  CB Port    Lag  | Epoch |Ring    Id      FSM State|Remote CB port  Lag  |         Chain


-------------------------------------------------------------------------------------------------

  3/1/19     3081  75      YES     2       ACTIVE    3/1/45          3083   PE26x--xPE25


PE chain information connecting to CB port 3/1/19 [Lag 3081]
            ------------------------------------------------------------------------
            PE Id | Epoch | FSM state |Uplink port|Casc port|Log Block|Prev PE|Next PE
            ------------------------------------------------------------------------
            PE26   75      ACTIVE      26/2/2      26/4/1    YES       --      x--x


          PE chain information connecting to remote CB port 3/1/45 [Lag 3083]
            ------------------------------------------------------------------------
            PE Id | Epoch | FSM state |Uplink port|Casc port|Log Block|Prev PE|Next PE
            ------------------------------------------------------------------------
            PE25   75      ACTIVE      25/2/1      25/3/1    YES       --      x--x
```

The following example shows output for all PE chains in the Campus Fabric domain.

```
ICX7750-48F SPX# show spx ring chain

  ---------------------------------------------------------------------------------------------
                           SPX CB [CASC PORT] CHAINS

  CB Port Lag | Epoch|Ring Id  FSM State|Remote CB port Lag | Chain
  ---------------------------------------------------------------------------------------------
  1/1/2   3072  75    YES  3   ACTIVE    1/1/3          3073  PE23--PE24x--xPE29
  1/1/3   3073  75    YES  3   ACTIVE    1/1/2          3072  PE29x--xPE24--PE23
  2/1/12  3079  75    YES  1   ACTIVE    3/1/31         3082  CB2/1/12x--xPE27--PE28
  3/1/3   3080  75    YES  4   ACTIVE    1/1/5          3084  PE22--PE21--PE20--PE19--PE18--PE17x--xCB1/1/5
  3/1/19  3081  75    YES  2   ACTIVE    3/1/45         3083  PE26x--xPE25
  3/1/31  3082  75    YES  1   ACTIVE    2/1/12         3079  PE28--PE27x--xCB2/1/12
  3/1/45  3083  75    YES  2   ACTIVE    3/1/19         3081  PE25x--xPE26
  1/1/5   3084  75    YES  4   ACTIVE    3/1/3          3080  CB1/1/5x--xPE17--PE18--PE19--PE20--PE21--PE22
```

The following example shows output for a specific PE chain (connected to CB port 3/1/19) in the Campus Fabric domain.

```
ICX7750-48F SPX# show spx ring chain 3/1/45

  -------------------------------------------------------------------------------------------------
  CB Port    Lag  | Epoch |Ring    Id      FSM State|Remote CB port  Lag  |         Chain
  -------------------------------------------------------------------------------------------------
  3/1/45     3083  75      YES     2       ACTIVE    3/1/19          3081   PE25x--xPE26
```

```
PE chain information connecting to CB port 3/1/45 [Lag 3083]
   ------------------------------------------------------------------------------
   PE Id | Epoch | FSM state |Uplink port|Casc port|Log Block|Prev PE|Next PE
   ------------------------------------------------------------------------------
   PE25   75      ACTIVE      25/2/1      25/3/1    YES       --      x--x

PE chain information connecting to remote CB port 3/1/19 [Lag 3081]
   ------------------------------------------------------------------------------
   PE Id | Epoch | FSM state |Uplink port|Casc port|Log Block|Prev PE|Next PE
   ------------------------------------------------------------------------------
   PE26   75      ACTIVE      26/2/2      26/4/1    YES       --      x--x
```

Enter the **show spx csp** command followed by desired parameters and the PE units you for which you want to display Control and Status Protocol (CSP) information that can help in troubleshooting issues. The information displayed is derived from the CB.

Enter the **show spx csp distributed** command followed by the PE units from which you want to receive information to display CSP information directly from the PE or PEs specified.

The following example shows CSP information received directly from PE units 23 and 29 as indicated by the use of the keyword **distributed** on the command line.

```
ICX7750-48F Router# show spx csp distributed units 23 29

*********************
Response from PE 23:
*********************

   CSP Oper: yes, Attach time: 1m22.0, up time: 11 hour(s) 48 minute(s) 38 second(s)
   PE Spx Lag id: 2, cur state up, IPC/ECP Port: 23/2/3
   Number of Traffic Class: 8
   Priority Flow Control: no
   CSP control ECID handshake complete: yes
   CSP control ECID: 555
   CSP Alternate control ECID: 556
   PE is in Ring (Status: Active), Logical Block: 1
   Total number of configured ports: 566
   CSP number of create port requests sent: 54
   CSP last Tx Trans ID=3, last Rx Trans ID=6
   ECP txErrors=0, sequence=10 firstSeq=10 lastSeq=9 firstAckIdx=0 ackIdx=0
   Next PE: None
   Previous PE: None
   Local CSP Major version is 1 Minor version 1
   Peer  CSP Major version is 1 Minor version 1
   Oper  CSP Major version is 1 Minor version 1

*********************
Response from PE 29:
*********************

   CSP Oper: yes, Attach time: 1m13.6, up time: 11 hour(s) 48 minute(s) 44 second(s)
   PE Spx Lag id: 2, cur state up, IPC/ECP Port: 29/2/3
   Number of Traffic Class: 8
   Priority Flow Control: no
   CSP control ECID handshake complete: yes
   CSP control ECID: 1035
   CSP Alternate control ECID: 1036
   PE is in Ring (Status: Active), Logical Block: 0
   Total number of configured ports: 566
   CSP number of create port requests sent: 54
   CSP last Tx Trans ID=3, last Rx Trans ID=9
   ECP txErrors=0, sequence=13 firstSeq=13 lastSeq=12 firstAckIdx=0 ackIdx=0
   Next PE: None
   Previous PE: None
   Local CSP Major version is 1 Minor version 1
   Peer  CSP Major version is 1 Minor version 1
   Oper  CSP Major version is 1 Minor version 1
```

Enter the **show spx zero-touch status** command to check whether Campus Fabric Zero-touch provisioning is enabled, active, or available.

The following example shows command output for a CB unit. The output indicates that both Campus Fabric (SPX) and zero-touch provisioning have been enabled. Two valid chains have been discovered, and three attached units have been added as PEs. IPC-over-Ethernet and ACL are used to copy new images to new units before reloading them as PEs if the new units have different images.

```
ICX7750-20Q Router# show spx zero-touch status
I cannot be discovered by zero-touch or spx interactive-setup. reason: cannot be a PE
zero-touch-enable and spx cb-enable are configured. Have done 19 probes
ZTP has discovered 2 valid chains and converted 3 PEs.
zero-touch-enable period: 6 minutes. Will trigger in 3 min 45 sec
ZTP postponed due to topology changes: 2
My MAC used in the IPC-over-Ethernet is 748e.f8f9.636e.
ACL #=0, ind=0
```

The following example shows output from a new unit. Neither SPX interactive-setup or zero-touch provisioning is in progress.

```
ICX7250-24 Router# show spx zero-touch status
I can be discovered by zero-touch or spx interactive-setup.
zero-touch-enable is not configured.
I am not assigned any PE ID
ACL #=0, ind=0
```

The following example shows output from a new unit during the image copy process. The referenced ACLs are used to forward image download packets. For example, packets with the destination MAC of 609c.9f2a.981c are forwarded to port 2/5. The lines " My MAC used in image copy is 609c.9f04.68cf " and "609c.9f04.68cf me cpu" shows that this MAC is its own MAC, so packets sent to this MAC are trapped to CPU.

```
ICX7250-24 Router# show spx zero-touch status
I can be discovered by zero-touch or spx interactive-setup.
I am discovered by CB u2 748e.f8f9.6300. My assigned ID is 28.
Will clean up in 116.6 sec if no keep-alive. Recv last KA 3.4 sec ago.
zero-touch-enable is not configured.
Default deny-all ACL is installed
My MAC used in image copy is 609c.9f04.68cf.
CB is in image download mode.
ID=28 MAC=609c.9f04.68ac ZTP=1, D0=2/5 2/6 2/7 2/8  D1=2/1 2/3 2/4
ACL #=7, ind=7
0: 609c.9f04.68cf me cpu
1: 609c.9f2a.d49c  fwd 2/5 i=0
2: 609c.9f2a.981c  fwd 2/5 i=1
3: 609c.9f04.6fb3  fwd 2/5 i=2
4: 609c.9f04.5e8b  fwd 2/1 i=3
5: cc4e.246c.f1cc  fwd 2/1 i=4
6: 748e.f8f9.636e CB fwd 2/1 i=5
Can reach CB u2: MAC=748e.f8f9.636e port=1/2/1
```

The following example shows output from a standalone ICX 7450 with startup configuration flash memory. As indicated in command output, the unit can be converted to a PE using option 3 of the **spx interactive-setup** command.

```
ICX7450-48F Router# show spx zero-touch status
I cannot be discovered by zero-touch or spx interactive-setup option 2. reason: once had startup-
configuration flash
I can be discoverd by spx interactive-setup option 3.
zero-touch-enable is not configured.
```

Enter the **show spx zero-touch ipc** command to display statistics on packets used in the zero-touch or spx interactive-setup process.

Check the following output fields:

- **Send message types:** The type 4 (ZTP-request) count should not be 0. If the count is 0, check that the candidate PE units are connected to CB SPX ports or SPX LAGs, zero-touch ports, or to PE ports that are non-base module ports.

- **Recv message types:** If type 3 (ZTP probe) count is 0, check that the candidate PEs are clean units. When it receives a ZTP request or probe, the PE console prints a warning message if it is not qualified.
- **Reliable mail, target MAC:** The send count and success count should match. If they are not equal, some messages have not been acknowledged after repeated retransmission. In this situation, zero-touch or SPX interactive-setup may still be successful.
- **Possible errors:** Check for system information on possible errors, such as corrupted packets.

The following example displays zero-touch IPC information.

```
ICX7750-20Q Router# show spx zero-touch ipc
V2, , src=748e.f8f9.6300, max_pkt_size=1468, recv 38, send 34
Message types have callbacks:
 3: ZTP-probe                          4: ZTP-request
 5: unreliable-mail                    6: reliable-mail
 7: test ipc packets                   8: cmd-to-new-unit
 9: KA-new-unit

Send message types:
    [4]=30,           [6]=4,
Recv message types:
    [3]=30,           [6]=8,

Statistics:
    send pkt num          :        34,    send pkt-msg num      :        34,
    recv pkt num          :        38,    send msg num          :        34,
    recv msg num          :        38,    pkt buf alloc         :        34,

    Reliable-mail        send  success  receive   duplic  T-ms
    target MAC              2        2        0        0     3
    unrel target MAC        0                 0

Possible errors:
```

Enter the **show spx zero-touch log** command to display detailed information on zero-touch-enable and spx interactive-setup processes. Search for **Error!** or **Warning!** messages for details on potential problems.

The following example indicates that port 1/1/47 links to an invalid chain that already contains a maximum number of PE units. The output also indicates a ZTP reliable mail message has not been delivered.

```
ICX7750-20Q Router# show spx zero-touch log
42.4516 ZTP chg_cb(old=0, new=4): I new-A, ZTP not enabled, , 1U 0P A4S0 I4A 1%
8m42.4057 init_zero_touch() init_T=5217 , 3U 0P A4S2 I4A 81%
9m46.4440 Send ZTP probes: u1, ports: 4/1/6 to 4/1/8 PEs: , 3U 0P A4S2 I4A
10m7.5115 cb_r_probe. rec#=2, load=173, inv [0] cc4e.248b.77b0,  rec#=2, exist mac=cc4e.246c.f190 <= cc4e.
248b.77b0,
cannot overwrite, 3U 0P A4S2 I4A
21m38.4824 ZTP, 12 .5min T, cb_state = 0, diff = 201 s, diff=201 > 120 sec, trigger probe, 3U 1P A4S2 I4A
20%
21m38.6988 Send ZTP probes: u1, ports: 4/1/6 to 4/1/8 PEs: pe19, , 3U 1P A4S2 I4A
28m40.3054 *** Error! 1/1/47 links to an invalid chain: (chain length=1 + PE 21 len 5 + PE 31 len 1) = 7 >
max 6
, 3U 0P A4S2 I4A 90%
28m42.4057 *** Warning! ZTP rel_mail fail:  chain 0 type=8, len=102, CPU=90%, 3U 0P A4S2 I4A 90%
```

Using show commands for operational analysis

The **show spx connections** command provides information on point-to-point connections to help analyze the Campus Fabric domain. The **show spx-mon** command helps to diagnose and correct a variety of issues.

The **show stack connection** command can be used to show stack cable connections. Likewise, in a Campus Fabric domain, the **show spx connections** command provides comprehensive information on physical connections, which eliminates the need to trace cables manually in the switch room.

Enter the **show spx connections** command in Privileged EXEC mode to display information on point-to-point Campus Fabric connections.

The following example displays information on six SPX connections that form three two-port LAGs. The port connections for each LAG are provided. Based on the connections displayed, three PE units (17, 18, and 19) are connected to the CB. PE units 17 and 18 form a chain. PE unit 19 is connected directly to the CB and has no downstream units.

```
ICX7750-48F Router# show spx connections
Probing the topology. Please wait ...
Spx-interface probe results: 6 links

Link 1: lag, # of ports = 2

1: 1/1/1  <---> 17/2/1

2: 2/1/1  <---> 17/2/2

Link 2: lag, # of ports = 2

1: 17/1/1 <---> 18/1/47

2: 17/1/2 <---> 18/1/48

Link 3: lag, # of ports = 2

1: 1/1/5 <---> 19/2/1

2: 2/1/5 <---> 19/2/2
```

Using the **show spx-mon** command, you can diagnose a variety of operational issues, including PE configuration mismatch, image mismatch, excessive SPX port traffic, and numerous PE join problems. For detailed information on using SPX monitoring capabilities to analyze issues, refer to Enabling and using SPX monitoring on page 141 in this guide.

With spx-mon enabled, enter the **show spx-mon** command in Privileged EXEC or global configuration mode to display detailed system information.

The following example enables spx-mon and displays information on the Campus Fabric configuration. Two PE units are in Ready state, and one PE has reserved configuration only. CLI guidance is given to troubleshoot a potential pe-join issue with the third PE unit.

```
ICX7750-48F Router# spx-mon enable
ICX7750-48F Router# show spx-mon

spx-mon is enabled

Total 2 PE(s) attached
Number of PEs in Ready State       :  2 (Id(s): 17, 23)
Number of PEs in Reserve           :  1 (Id(s): 18)     <-- Reserved configuration for 1 PE
Number of PEs in Config-mismatch   :  0
Number of PEs in Image-Mismatch    :  0

CLI: sh spx-mon pe-join <cb-cport> can be used to diagnose pe-join issues <-- CLI help for additional
                                                                              diagnosis

Active CPU Utilization
1   sec avg 1 percent busy
5   sec avg 1 percent busy
60  sec avg 1 percent busy
300 sec avg 1 percent busy

PE CPU Utilization:           Normal
Spx Interface Utilization:    Very low
Spx Interface Errors:         None
PE User Port Errors:          None
```

Campus Fabric mirroring overview

Port mirroring and monitoring involves the following configuration steps:

- Configure mirroring ports.
- Configure ports to be monitored.
- Connect or configure network analyzer to the mirror port and view packets.

Campus Fabric ports can be mirrored and monitored much like stacking ports. The following section describes supported and unsupported Campus Fabric mirroring configurations and provides some basic examples. For more information on FastIron mirroring and monitoring capabilities, including additional configuration examples, refer to "Port mirroring and monitoring" in the *Ruckus FastIron Monitoring Configuration Guide*.

Mirroring in a Campus Fabric domain

In a Campus Fabric domain, you can mirror ports in an ICX 7150 PE unit, an ICX 7250 PE unit, an ICX 7450 PE unit, an ICX 7650 CB unit, or an ICX 7750 CB unit. Campus Fabric supports port mirroring, VLAN mirroring, and ACL mirroring with a mirror clause.

Campus Fabric mirroring limitations

Consider the following items when configuring mirroring in a Campus Fabric network.

- Only one mirror port can be configured on a PE unit for port mirroring.
- When an SPX LAG is mirrored, all traffic is monitored. It is not possible to limit monitoring to an individual LAG port.
- Due to a hardware limitation, a PE mirror port cannot mirror egress flooding, for example, from broadcast, unknown unicast, or multicast traffic.
- A VLAN must have at least one port member configured before monitoring can be configured.
- All incoming traffic (tagged and untagged) in the VLAN is mirrored. Mirroring is not affected by the configuration of the mirror port itself.

  NOTE
  If you are mirroring outbound traffic on a CB port, you may see additional mirrored traffic incoming on a VLAN that contains PE ports. This happens because CB units flood BUM traffic on all CB ports when inbound traffic is received in a VLAN that contains PE ports. The CB units use an outbound VLAN filter to prevent the flooded traffic from exiting through ports that do not belong to the correct VLAN. However, the outbound traffic is mirrored before the CB's VLAN filter is applied. Traffic will be dropped on CB ports if they are not members of the VLAN, but the mirrored traffic will not be dropped. Outbound mirroring of the CB port will continue as long as it is enabled.

Supported Campus Fabric mirroring scenarios

The following mirroring scenarios are possible in a Campus Fabric domain :

- Mirroring a port on any CB unit, monitoring from any CB port on any CB unit
- Mirroring a CB port, monitoring from a PE port (supported for port-based mirroring; not supported for ACL mirroring)

  NOTE
  If you are monitoring a CB port from a PE port, the monitoring port is configured as a virtual PE port on the CB, and traffic is transmitted to and from the virtual port with an E-tag addressed to the port. Packets are copied out to the mirroring port with the E-tag intact. As a result, the monitoring device receive packets containing the E-tag.

- Mirroring a port on a PE unit, monitoring from another port on the same PE unit
- Mirroring of a CB port, monitoring from a PE port when VLAN mirroring is enabled.

Unsupported Campus Fabric mirroring configurations

The following scenarios are not supported in a Campus Fabric domain:

- Mirroring a port on one PE unit, monitoring a port from a different PE unit

  NOTE
  If the CB determines the mirror port is configured on a PE port, and the monitoring port is on a different PE, the system blocks the configuration and displays a warning similar to the following message:
  `Mirror port 17/1/1 and monitor port 18/1/2 are not on the same PE. Either move mirror port to a CB port, or change mirror and monitor port to the same PE.`

- With ACL mirroring, PE to CB or CB to PE monitoring
- With VLAN mirroring, PE cannot be used as a mirror port
- Monitoring an individual SPX LAG member

Sample configuration for Campus Fabric mirroring

The following example configures port 1/1/7 on the CB as a mirror port that monitors inbound traffic on PE port 17/1/1.

```
device# configure terminal
device(config)# mirror-port ethernet 1/1/17
device(config)# interface ethernet 17/1/1
device(config-if-pe-e1000-17/1/1)# monitor ethernet 1/1/17 in
```

Displaying Campus Fabric mirroring information

The **show mirror** command can be used to display information on mirroring activity for the device. The following example displays information on mirroring on CB units 1 and 2. PE units 17 and 18 are being monitored.

```
device# show mirror
Mirror port 1/1/17
  Input monitoring      : (U17/M1)   1   2   3  11
  Input monitoring      : (U17/M2)   1
  Output monitoring     : (U17/M1)   1   2   3  11
  Output monitoring     : (U17/M2)   1
Mirror port 2/1/20
  Input monitoring      : (U17/M1)  10
  Input monitoring      : (U18/M1)   1
  Output monitoring     : (U17/M1)  10
  Output monitoring     : (U18/M1)   1
```

MIB support for Campus Fabric 802.1br SPX configurations

All statistics about packets received and sent, RMON, jumbo frames (greater than 1518 bytes), runts, giants, and other instances are gathered through the stack interfaces between CB units or through the SPX interfaces between CB units and PE units. These statistics are accessible through SNMP on CB units. MIB support for SPX configuration is the same as for a standard interface. The SPX MIB definition is described in the *Unified IP MIB Reference*.

Campus Fabric Troubleshooting

- Enabling and using SPX monitoring....141
- Troubleshooting PE data ports....150
- Campus Fabric general troubleshooting checklist....152

Enabling and using SPX monitoring

Enable SPX monitoring to use background and system trace information for problem diagnosis and resolution.

SPX monitoring (spx-mon) capabilities are available only in an 802.1br Campus Fabric domain.

Use SPX monitoring tools to help you determine the source of an issue in the Campus Fabric domain, whether the issue stems from a configuration error or system problems. Output from the **show spx-mon** command highlights issues and provides possible next steps to resolve the issues.

From the CB active controller, SPX monitoring checks for the following common issues in the Campus Fabric domain:

- New PE units: The system message indicates that executing the **write memory** command is required.
- PE state: "Ready" indicates that the PE has successfully joined the CB.
- PE units with configuration mismatch: The system displays steps needed to correct the problem.
- PE units with image mismatch: The system lists steps to correct the condition (for example, enable autocopy or configure the TFTP server).
- Current CPU utilization: CPU utilization is listed for the active controller, and, if CPU utilization on the standby controller or any PE unit exceeds 50 per cent, updates are included.
- Port utilization: For each PE, the system indicates the SPX port with the highest utilization.
- SPX port errors: Any PE SPX port errors are listed. For each PE, the SPX port with the highest error count is also listed.
- PE user port errors: Any PE user ports with errors are listed. For each PE, the user port with the highest utilization is also listed.
- SPX port state: The system checks PE port state against CB port state.
- PE chain or ring state: The system lists the members of a chain, the CB SPX port connection, and whether the connection is active.
- PE ring ACL state: The system displays whether the PE ring has passed ACL verification.

Some other items that SPX monitoring can diagnose include:

- PE-to-PE port consistency between the active and standby controllers
- SPX port hardware configuration
- SPX LAG hardware configuration
- CB-PE topology database
- PE forwarding entries
- SPX port VLAN configuration
- SPX port spanning tree state
- Virtual ports for all PE ports
- PE join validation.

Perform the following steps to enable and use SPX monitoring features.

1. In global configuration mode on the CB, enter the **enable spx-mon** command.

```
ICX7750-26Q# configure terminal
ICX7750-26Q(config)# enable spx-mon
```

2. On the CB in Privileged EXEC or global configuration mode, enter the **show spx-mon** command for information on PE state.

```
ICX7750-48F Router# show spx-mon
spx-mon is enabled

Total 2 PE(s) attached
Number of PEs in Ready State       :  2 (Id(s): 17, 23)
Number of PEs in Reserve           :  1 (Id(s): 18)
Number of PEs in Config-mismatch   :  0
Number of PEs in Image-Mismatch    :  0

CLI: sh spx-mon pe-join <cb-cport> can be used to diagnose pe-join issues

Active CPU Utilization
1   sec avg 1 percent busy
5   sec avg 1 percent busy
60  sec avg 1 percent busy
300 sec avg 1 percent busy

PE CPU Utilization:           Normal

Spx Interface Utilization:    Very low

Spx Interface Errors:         None

PE User Port Errors:          None

  ------------------------------------------------------------------------------------------------
                             SPX CB [CASC PORT]
CHAINS
  CB Port    Epoch |Ring    Id      FSM State|Remote CB port  |         Chain
  ------------------------------------------------------------------------------------------------
  2/1/1      9       NO      0       INIT      INVALID          PE17--PE23
```

   The example shows that spx-mon is enabled, two PEs (17 and 23) are attached and in Ready state, and one PE configuration is reserved (PE 18). There are no configuration issues, and CPU Utilization is normal, while SPX usage is very low and error-free. One PE chain is connected through CB port 2/1/1.

3. For information on a PE unit joining the domain, enter the **show spx-mon pe-join** command followed by the port number for the CB cascade port.

```
ICX7750-26Q(config)# show spx-mon pe-join 2/1/1
Error! Last PE 23 in the chain has no DOWNSTREAM SPX ports in UP state
Above error(s) needs to be corrected...
```

   The example checks CB SPX port 2/1/1 and shows a PE join issue for PE unit 23.

   In this situation, CB SPX port 2/1/1 is connected to a PE chain with PE 23 as the last PE. A new PE cannot join the chain until at least one of the SPX ports on PE 23 is up. The system has detected that no SPX port is up to allow the new PE to join.

System validation of network changes

The system validates numerous items after any of the following events:

- A PE joins the Campus Fabric domain.

- A PE ages out of the Campus Fabric domain.
- An SPX LAG is updated.
- An SPX port changes state.
- The CB active controller switches over or fails over to the standby controller.

When any of these changes occur, the following items are checked to confirm that the change has been completed successfully for all involved network components.

- SPX ports are shown as being in the correct state on the CB and the PE.
- SPX port hardware configuration is correct.
- SPX topology database is correct.
- SPX LAGs are correct.
- PE virtual ports have been created correctly.
- PE forwarding entries are correct.
- Appropriate PEs are in the Ready state.
- On the standby controller, relevant information has been validated.

Sample show spx-mon output indicating issues

The following example shows two PEs are in Ready state with no errors. There is reserved configuration for another PE. Assuming that the user has attached only two PEs, no corrections are necessary.

However, if the user expected three PEs to be attached and in Ready state, some diagnosis is required. The output includes potential CLI guidance that indicates the **show spx-mon pe-join** command can be used for the appropriate CB port (through which the inactive unit is attached) to diagnose the issue.

```
ICX7750-48F Router# show spx-mon
spx-mon is enabled

Total 2 PE(s) attached
Number of PEs in Ready State       :  2 (Id(s): 17, 23)
Number of PEs in Reserve           :  1 (Id(s): 18)  <--- Reserved configuration for 1 PE
Number of PEs in Config-mismatch   :  0
Number of PEs in Image-Mismatch    :  0


CLI: sh spx-mon pe-join <cb-cport> can be used to diagnose pe-join issues   <--- CLI help for additional
                                                                                diagnosis

Active CPU Utilization
1   sec avg 1 percent busy
5   sec avg 1 percent busy
60  sec avg 1 percent busy
300 sec avg 1 percent busy

PE CPU Utilization:           Normal
Spx Interface Utilization:    Very low
Spx Interface Errors:         None
PE User Port Errors:          None
```

Monitoring traffic for an SPX port

Command output for the **show spx-mon** command includes information on SPX interface utilization and gives an overview of CB-PE and PE-PE traffic. The following example shows that PE SPX port 17/2/1 is using 18% of its traffic capacity in both directions.

```
ICX7750-48F Router# show spx-mon
spx-mon is enabled

Total 2 PE(s) attached
Number of PEs in Ready State       :  2 (Id(s): 17, 23)
Number of PEs in Reserve           :  1 (Id(s): 18)
Number of PEs in Config-mismatch   :  0
Number of PEs in Image-Mismatch    :  0

CLI: sh spx-mon pe-join <cb-cport> can be used to diagnose pe-join issues

Active CPU Utilization
1   sec avg 1 percent busy
5   sec avg 1 percent busy
60  sec avg 1 percent busy
300 sec avg 1 percent busy

PE CPU Utilization:           Normal
PE 17:
Rx utilization Port 17/2/1    18%
Tx utilization Port 17/2/1    18%

Spx Interface Errors:         None
PE User Port Errors:          None
```

CB active controller with SPX LAG issues

The following example indicates that SPX LAG port 2/1/1 has an incorrect PE database index. Command output displays the warning "Port 2/1/1 doesn't have matching PE db."

```
ICX7750-48F Router# show spx-mon
spx-mon is enabled

Total 2 PE(s) attached
Number of PEs in Ready State       :  2 (Id(s): 17, 23)
Number of PEs in Reserve           :  1 (Id(s): 18)
Number of PEs in Config-mismatch   :  0
Number of PEs in Image-Mismatch    :  0

CLI: sh spx-mon pe-join <cb-cport> can be used to diagnose pe-join issues

Active CPU Utilization
1   sec avg 1 percent busy
5   sec avg 1 percent busy
60  sec avg 7 percent busy
300 sec avg 3 percent busy

Port 2/1/1 doesn't have matching PE db                    <--- Error condition indicated for Port 2/1/1
 CLI sh spx debug lag all can be used for more information   <--- CLI help for additional diagnosis

PE CPU Utilization:           Normal
Spx Interface Utilization:    Very low
Spx Interface Errors:         None
PE User Port Errors:          None
ICX7750-48F Router#
```

The CLI help indicates that the **show spx debug lag all** command can be used for additional diagnosis. As shown in the example, debug command output provides the SPX LAG ID (columns 1 and 4), lists the ports in each SPX LAG (column 1), provides a database index number (column 2), and displays a port type for each port in the LAG (column 3). In the example, the database index for ports 1/1/1 and 2/1/1 do not match although they should.

```
ICX7750-48F Router# show spx debug lag all

spx-lag ID 3072

Port          PortExtDb Index          Port type          lag_id
1/1/1            0                       1                 3072   |<-- Database mismatch
2/1/1            f                       1                 3072   |    on 1/1/1 and 2/1/1

spx-lag ID 3073

Port          PortExtDb Index          Port type          lag_id
1/1/6            6                       1                 3073

spx-lag ID 3074

Port          PortExtDb Index          Port type          lag_id
1/1/2            ff                      1                  3074
1/1/3            ff                       1                 3074
```

Using the keyword **distributed** derives SPX LAG information directly from remote PEs. The following example displays information on SPX LAGs derived directly from PE unit 19.

```
ICX7750-48F Router# show spx debug lag all dist units 19

*********************
Response from PE 19:
*********************

spx-lag ID 1
Port          ECID          Port type          lag_id
19/1/1         236           5                   1
19/1/2         236           5                   1

spx-lag ID 2
Port          ECID          Port type          lag_id
19/2/1         235           2                   2
```

Standby controller with high CPU utilization

The following example shows high CPU utilization on the standby controller.

```
ICX7750-48F Router# show spx-mon
spx-mon is enabled

Total 2 PE(s) attached
Number of PEs in Ready State       :  2 (Id(s): 17, 23)
Number of PEs in Reserve           :  1 (Id(s): 18)
Number of PEs in Config-mismatch   :  0
Number of PEs in Image-Mismatch    :  0

CLI: sh spx-mon pe-join <cb-cport> can be used to dignose pe-join issues

Active CPU Utilization
1   sec avg 1 percent busy
5   sec avg 1 percent busy
60  sec avg 1 percent busy
300 sec avg 1 percent busy

Standby CPU Utilization      <--- All measured intervals show high CPU use on the standby controller.
1   sec avg 99 percent busy
5   sec avg 99 percent busy
60  sec avg 255 percent busy
300 sec avg 255 percent busy

PE CPU Utilization:           Normal
Spx Interface Utilization:    Very low
Spx Interface Errors:         None
PE User Port Errors:          None
```

Standby controller with topology mismatch issues

The following example shows an inconsistency in the Campus Fabric domain topology stored on the standby controller.

```
ICX7750-48F Router# show spx-mon
spx-mon is enabled

Total 2 PE(s) attached
Number of PEs in Ready State       :  2 (Id(s): 17, 23)
Number of PEs in Reserve           :  1 (Id(s): 18)
Number of PEs in Config-mismatch   :  0
Number of PEs in Image-Mismatch    :  0

CLI: sh spx-mon pe-join <cb-cport> can be used to diagnose pe-join issues

Active CPU Utilization
1   sec avg 1 percent busy
5   sec avg 1 percent busy
60  sec avg 1 percent busy
300 sec avg 1 percent busy

Port 2/1/1 doesn't have matching PE db
 CLI sh spx debug lag all can be used for more information
PE 17: Standby Topology and PE db don't match, sh spx debug lag all can used to get details  <--- Standby
                                                                                                topology
                                                                                                mismatch


Standby CPU Utilization
1     sec avg 99 percent busy
5     sec avg 99 percent busy
60    sec avg 255 percent busy
300   sec avg 255 percent busy

PE CPU Utilization:           Normal
Spx Interface Utilization:    Very low
Spx Interface Errors:         None
PE User Port Errors:          None
```

PE join issue: No available SPX port

The **show spx** command output in the following example indicates that unit 2 is the CB active controller for the Campus Fabric domain. The active controller has only one SPX port, port 2/1/1. Any PE must join through that port. The topology shows a chain of two PE units (PE 17 and PE 23). Any new PE must join after PE 23.

The configuration shows reserve PE configuration for PE 18. If the PE had been expected to join, the **show spx-mon** command set can be used for troubleshooting.

```
ICX7750-48F Router# show spx
T=26m14.9: alone: standalone, D: dynamic cfg, S: static
ID   Type          Role    Mac Address    Pri State   Comment
1  S ICX7750-48XGF standby cc4e.2438.a580 128 remote  Ready
2  S ICX7750-48XGF active  cc4e.2438.8d80 128 local   Ready
17 S ICX7450-24G   spx-pe  cc4e.246c.e2b8 N/A remote  Ready
18 S ICX7450-48G   spx-pe  0000.0000.0000 N/A reserve
23 S ICX7450-48G   spx-pe  cc4e.246c.ea50 N/A remote  Ready

    standby      active
     +---+        +---+
  2/4| 1 |2/1--2/1| 2 |
     +---+        +---+
           +-----+        +-----+
  2/1/1--2/2| 17 |2/3--2/3| 23 |
           +-----+        +-----+
```

The **show spx-mon pe-join** output for CB SPX port 2/1/1 indicates that the connected PE chain does not have an SPX port from the last PE in the chain (PE 23) that a new PE unit could join.

```
ICX7750-48F Router# show spx-mon pe-join 2/1/1
Error! Last PE 23 in the chain has no DOWNSTREAM SPX ports
Above error(s) needs to be corrected...
```

PE join issue: No SPX port in the up state

The following example shows CB unit 2 as the active controller for the Campus Fabric domain. PE unit 18 has reserve configuration and has not joined the Campus Fabric domain. The problem can be diagnosed with the **show spx-mon** or the **show spx-mon pe-join** command.

```
ICX7750-48F Router# show spx
T=13m4.7: alone: standalone, D: dynamic cfg, S: static
ID   Type          Role    Mac Address    Pri State   Comment
1  S ICX7750-48XGF standby cc4e.2438.a580 128 remote  Ready
2  S ICX7750-48XGF active  cc4e.2438.8d80 128 local   Ready
17 S ICX7450-24G   spx-pe  cc4e.246c.e2b8 N/A remote  Ready
18 S ICX7450-48G   spx-pe  0000.0000.0000 N/A reserve
23 S ICX7450-48G   spx-pe  cc4e.246c.ea50 N/A remote  Ready

    standby      active
     +---+        +---+
  2/4| 1 |2/1--2/1| 2 |
     +---+        +---+
           +-----+        +-----+
  2/1/1--2/2| 17 |2/3--2/3| 23 |2/1-
           +-----+        +-----+
```

In this case, the **show spx-mon pe-join** command is executed on CB port 2/1/1, and the output indicates that the last PE in the chain has no active downstream SPX port.

```
ICX7750-48F Router# show spx-mon pe-join 2/1/1
Error! Last PE 23 in the chain has no DOWNSTREAM SPX ports in UP state
Above error(s) needs to be corrected...
```

When the **show interface brief** command is executed for the problem port (23/2/1), output confirms that the link is down. Once the link is restored, an SPX connection can be created or restored with PE unit 18.

```
ICX7750-48F Router# show interface brief ethernet 23/2/1

Port       Link    State   Dupl Speed Trunk Tag Pvid Pri MAC             Name
23/2/1     Down    None    None None  None  No  1    0   cc4e.246c.ea81
```

PE join issue: PE ring with ACL issues

The **show spx-mon** command can be used to diagnose issues related to ACLs used to create SPX rings.

```
ICX7750-48F Router# show spx-mon
spx-mon is enabled

Total 2 PE(s) attached
Number of PEs in Ready State       :  2 (Id(s): 17, 23)
Number of PEs in Reserve           :  1 (Id(s): 18)
Number of PEs in Config-mismatch   :  0
Number of PEs in Image-Mismatch    :  0

CLI: sh spx-mon pe-join <cb-cport> can be used to diagnose pe-join issues

Active CPU Utilization
1   sec avg 1 percent busy
5   sec avg 1 percent busy
60  sec avg 7 percent busy
300 sec avg 3 percent busy

Port 17/2/2 has incorrect acl config  <--- ACL issues indicated on port.

PE CPU Utilization:           Normal
Spx Interface Utilization:    Very low
Spx Interface Errors:         None
PE User Port Errors:          None
ICX7750-48F Router#
```

In the example, PE port 17/2/2 is an SPX uplink port with an incorrect ACL configuration.

Sample show spx-mon history output

The following output for the **show spx-mon history** command provides sample ECP (IEEE Edge Control Protocol) packet flow between CB and PE units. The keyword **distributed** indicates that the history information is derived directly from one or more designated PE units (in this case, from PE unit 19). Without the keyword, the history is derived from the CB.

```
ICX7750-48F Router# show spx-mon history distributed 19

**********************
Response from PE 19:
**********************
51m17.8933 Unit 19 ecp_process_pdu: RxAck port_id 19/2/1, ecid 235, rxSeq 11, fSeq = 12, txSeq 12, fAck 0,
ack 0, lSeq 11
   [stack: 002d1360 00a1a0cc 00f0eee0 00f0fcd8 00c309f8 010a34e0 00615180 010a]
51m17.8786 Unit 19 ecp_process_pdu: RxAck port_id 19/2/1, ecid 235, rxSeq 10, fSeq = 11, txSeq 11, fAck 2,
ack 2, lSeq 11
   [stack: 002d1360 00a1a0cc 00f0eee0 00f0fcd8 00c309f8 010a34e0 00615180 010a]
51m17.8724 Unit 19 ecp_process_pdu: TxAck port_id 19/2/1, ecid 235, rxSeq 11, fSeq = 10, txSeq 11, fAck 1,
ack 2, lSeq 11
   [stack: 002d201c 00a1a0cc 00f0eee0 00f0fcd8 00c309f8 010a34e0 00615180 010a]
51m17.8667 Unit 19 ecp_transmit: port_id 19/2/1, ptype 1002, ecid 235, fSeq = 10, txSeq 11, fAck 1, ack 2,
lSeq 11
   [stack: 002cd7e4 002f2bfc 002f53cc 002f6704 002ffa34 003008f8 002f7b2c 002f]
51m17.8393 Unit 19 ecp_process_pdu: RxPkt port_id 19/2/1, cc4e.2438.8e00, ecid 235, rxSeq 11, fSeq = 10,
txSeq 10, fAck 1, ack 1, lSeq 10
   [stack: 002d18ec 00a1a0cc 00f0eee0 00f0fcd8 00c309f8 010a34e0 00615180 010a]
51m17.8212 Unit 19 ecp_process_pdu: RxAck port_id 19/2/1, ecid 235, rxSeq 9, fSeq = 10, txSeq 10, fAck 1,
ack 1, lSeq 10
   [stack: 002d1360 00a1a0cc 00f0eee0 00f0fcd8 00c309f8 010a34e0 00615180 010a]
51m17.8148 Unit 19 ecp_process_pdu: TxAck port_id 19/2/1, ecid 235, rxSeq 10, fSeq = 9, txSeq 10, fAck 0,
ack 1, lSeq 10
   [stack: 002d201c 00a1a0cc 00f0eee0 00f0fcd8 00c309f8 010a34e0 00615180 010a]
51m17.8065 Unit 19 ecp_transmit: port_id 19/2/1, ptype 1002, ecid 235, fSeq = 9, txSeq 10, fAck 0, ack 1,
lSeq 10
   [stack: 002cd7e4 002f2bfc 002f53cc 002f6704 002ffa34 003008f8 002f7b2c 002f]
51m17.7532 Unit 19 ecp_process_pdu: RxPkt port_id 19/2/1, cc4e.2438.8e00, ecid 235, rxSeq 10, fSeq = 9,
txSeq 9, fAck 0, ack 0, lSeq 9
   [stack: 002d18ec 00a1a0cc 00f0eee0 00f0fcd8 00c309f8 010a34e0 00615180 010a]
51m17.6644 Unit 19 ecp_process_pdu: TxAck port_id 19/2/1, ecid 235, rxSeq 9, fSeq = 9, txSeq 9, fAck 0, ack
0, lSeq 9
   [stack: 002d201c 00a1a0cc 00f0eee0 00f0fcd8 00c309f8 010a34e0 00615180 010a]
51m17.6571 Unit 19 ecp_transmit: port_id 19/2/1, ptype 1002, ecid 235, fSeq = 9, txSeq 9, fAck 0, ack 0,
lSeq 9
   [stack: 002cd7e4 002f2bfc 002f53cc 002f6704 002ffa34 003008f8 002f7b2c 002f]
51m17.6021 Unit 19 ecp_process_pdu: RxPkt port_id 19/2/1, cc4e.2438.8e00, ecid 235, rxSeq 9, fSeq = 9,
txSeq 9, fAck 0, ack 0, lSeq 8
   [stack: 002d18ec 00a1a0cc 00f0eee0 00f0fcd8 00c309f8 010a34e0 00615180 010a]
48m53.2531 Unit 19 ecp_process_pdu: RxAck port_id 19/2/1, ecid 235, rxSeq 8, fSeq = 9, txSeq 9, fAck 0, ack
0, lSeq 8
   [stack: 002d1360 00a1a0cc 00f0eee0 00f0fcd8 00c309f8 010a34e0 00615180 010a]
48m53.1509 Unit 19 ecp_process_pdu: TxAck port_id 19/2/1, ecid 235, rxSeq 8, fSeq = 8, txSeq 8, fAck 0, ack
0, lSeq 8
   [stack: 002d201c 00a1a0cc 00f0eee0 00f0fcd8 00c309f8 010a34e0 00615180 010a]
48m53.1438 Unit 19 ecp_transmit: port_id 19/2/1, ptype 1002, ecid 235, fSeq = 8, txSeq 8, fAck 0, ack 0,
lSeq 8
   [stack: 002cd7e4 002f2bfc 002f53cc 002f6704 002ffa34 003008f8 002f7b2c 002f]
48m53.0729 Unit 19 ecp_process_pdu: RxPkt port_id 19/2/1, cc4e.2438.8e00, ecid 235, rxSeq 8, fSeq = 8,
txSeq 8, fAck 0, ack 0, lSeq 7
   [stack: 002d18ec 00a1a0cc 00f0eee0 00f0fcd8 00c309f8 010a34e0 00615180 010a]
48m48.9443 Unit 19 ecp_process_pdu: RxAck port_id 19/2/1, ecid 235, rxSeq 7, fSeq = 8, txSeq 8, fAck 0, ack
0, lSeq 7
   [stack: 002d1360 00a1a0cc 00f0eee0 00f0fcd8 00c309f8 010a34e0 00615180 010a]
48m48.6568 Unit 19 ecp_process_pdu: TxAck port_id 19/2/1, ecid 235, rxSeq 7, fSeq = 7, txSeq 7, fAck 0, ack
0, lSeq 7
   [stack: 002d201c 00a1a0cc 00f0eee0 00f0fcd8 00c309f8 010a34e0 00615180 010a]
48m48.6499 Unit 19 ecp_transmit: port_id 19/2/1, ptype 1002, ecid 235, fSeq = 7, txSeq 7, fAck 0, ack 0,
lSeq 7
   [stack: 002cd7e4 002f2bfc 002f53cc 002f6704 002ffa34 003008f8 002f7b2c 002f]
```

```
48m47.4032 Unit 19 ecp_process_pdu: RxPkt port_id 19/2/1, cc4e.2438.8e00, ecid 235, rxSeq 7, fSeq = 7,
txSeq 7, fAck 0, ack 0, lSeq 6
   [stack: 002d18ec 00a1a0cc 00f0eee0 00f0fcd8 00c309f8 010a34e0 00615180 010a]
48m47.0706 Unit 19 ecp_process_pdu: RxAck port_id 19/2/1, ecid 235, rxSeq 6, fSeq = 7, txSeq 7, fAck 0, ack
0, lSeq 6
   [stack: 002d1360 00a1a0cc 00f0eee0 00f0fcd8 00c309f8 010a34e0 00615180 010a]
48m47.0431 Unit 19 ecp_process_pdu: TxAck port_id 19/2/1, ecid 235, rxSeq 6, fSeq = 6, txSeq 6, fAck 0, ack
0, lSeq 6
   [stack: 002d201c 00a1a0cc 00f0eee0 00f0fcd8 00c309f8 010a34e0 00615180 010a]
48m47.0358 Unit 19 ecp_transmit: port_id 19/2/1, ptype 1002, ecid 235, fSeq = 6, txSeq 6, fAck 0, ack 0,
lSeq 6
   [stack: 002cd7e4 002f2bfc 002f53cc 002f6704 002ffa34 003008f8 002f7b2c 002f]
48m47.0283 Unit 19 ecp_process_pdu: RxPkt port_id 19/2/1, cc4e.2438.8e00, ecid 235, rxSeq 6, fSeq = 6,
txSeq 6, fAck 0, ack 0, lSeq 5
   [stack: 002d18ec 00a1a0cc 00f0eee0 00f0fcd8 00c309f8 010a34e0 00615180 010a]
48m18.2364 Unit 19 PE joined
```

The SPX monitoring PE join checklist

The following checklist can be used to diagnose PE-join issues in conjunction with SPX monitoring tools.

TABLE 15 The SPX monitoring PE join checklist

Problem	Items to check	Related commands and instructions
PE unit is not responding or does not join CB — No transit PE in topology	The CB port is up.	**show interfaces brief**
	The CB is enabled.	**show spx** (spx cb-enable is present)
	The SPX port or LAG is correct.	**show spx debug lag all** The command as shown derives information on LAG connections and members from the CB. Use the keyword **distributed** to derive information directly from remote PE units. For example, **show spx debug lag all distributed all-pe**
	The LLDP packet is being received by the CB.	**show spx pe topology** *level*
	Topology is valid.	**show spx**
	Free PE IDs are available.	**show spx**
PE does not join — Transit PE present in topology	PEs on the path joined and are in Ready state.	**show spx-mon**
	PE forwarding entries match upstream and cascade port configuration.	**show spx-mon**
	CB port is up.	**show interfaces brief**
	LLDP packet is being received.	**show spx pe topology** *level*
	Topology is valid.	**show spx**
	Free PE IDs are available.	**show spx**
PE joins but does not achieve Ready state, or PE ages out	CB port is up.	**show interfaces brief**
	The port has no errors or unidirectional failures.	**show statistics**
	CSP port state is correct.	**show spx debug port** *unit/slot/port*

Troubleshooting PE data ports

Traffic loss can occur on data ports attached to Campus Fabric PE units for several reasons. You can send an ECID port ping to help isolate the cause of traffic loss.

Once you issue the **spx ping** command, the CB sets up an ECID trap for the ECID associated with the PE data port under test and places the port in loopback mode. When the PE confirms the loopback, the CB sends a single ECID ping, identifiable by its sequence number, to the port under test. In a successful test, the PE port receives the ECID ping directed to it and loops it back to the CB. The CB then removes the loopback. In an unsuccessful test, the PE port does not respond to the ping within a maximum of four seconds, and the PE removes the loopback after a four-second timer expires.

If an ECID port ping succeeds but data traffic issues persist, the cause is likely related to an application issue, such as incorrect IP settings. If the ECID port ping fails, the cause of traffic loss on the port is likely related to an SPX infrastructure issue.

Consider the following before performing an ECID port ping:

- ECID pings place the port under test in loopback and, as a result, can disrupt control and data traffic on the port.
- ECID pings do not work for ports that are physically down.
- ECID pings are not supported for SPX ports.
- ECID pings can be initiated only from the CB.
- Each ECID ping is sent to a specific PE, and only one ping can be sent at a time.

Perform the following steps to send an ECID ping to a PE data port.

1. In Privileged EXEC mode, enter the **spx ping** command followed by the port number to be tested. When prompted, enter **y** to continue.

```
ICX7750-48F Router# spx ping 17/1/1
SPX Ping Port is disruptive to control, data traffic. Are you sure, you want to continue (enter 'y'
or 'n'): y

ICX7750-48F Router# Received response (seq# 6) for ecid1 ping to 17/1/1 port from PE 17
```

   The example shows a successful test on PE port 17/1/1. Traffic loss on the port may be due to a problem with IP settings or other applications issues.

```
ICX7750-48F Router# spx ping 17/1/2
SPX Ping Port is disruptive to data traffic. Are you sure, you want to continue (enter 'y' or 'n'): y


ICX7750-48F Router# No ecid ping response for spx port 17/1/2, seq 8 from PE 17 !
```

   The example shows a failed test on PE port 17/1/2. The port cannot be reached, possibly due to an SPX infrastructure issue.

2. (Optional) When an ECID port ping fails, enter the **show spx csp events distributed** command for the PE under test to verify that the loopback command from the CB was received.

```
ICX7750-48F Router# show spx csp events distributed 17
*********************
Response from PE 17:
*********************
PE 0: port 17/1/1 loopback disable pass (13 minute(s) 58 second(s) )
[stack: 002dffdc 0030dd90 002f36b4 002eaee8 002ebc2c 002ea064 00324a3c 002c53dc 009f9740 00ee16c0
00ee24b4 00c0acc8]
…
<snip>
…
PE 0: port 17/1/1 loopback enable pass (13 minute(s) 58 second(s) )
[stack: 002dfdd0 0030dd90 002f36b4 002eaee8 002ebc2c 002ea064 00324a3c 002c53dc 009f9740 00ee16c0
00ee24b4 00c0acc8]
```

   The example shows that PE port 17/1/1 received a loopback enable command from the CB and that the PE later disabled the loopback.

3. (Optional) Based on the outcome of the ECID port ping, follow any prescribed steps for troubleshooting packet loss.

Campus Fabric general troubleshooting checklist

The following table lists some common problems and items you can check before contacting a technical support representative.

For information on stacking issues, refer to "Traditional Stack Troubleshooting" in the *Ruckus FastIron Stacking Configuration Guide*. For information on technical support, refer to Contacting Ruckus Customer Services and Support on page 9.

A PE unit may not join the Campus Fabric domain for many reasons. For other reasons, a PE may not achieve a Ready state, or the PE may age out after entering the Ready state. Check the applicable items listed in the following sections when a PE fails.

TABLE 16 Campus Fabric general troubleshooting checklist

Problem	Items to check	Related commands and instructions
1. PE unit is not responding or does not join CB.	a. Cable is correctly connected and connecting port is up.	On CB and PE port: **show interfaces brief**
	b. PE unit shows up and is in Ready state.	On CB and PE: **show running-config** On CB: **show spx**
	c. All transit PE units are correctly connected and are in Ready state.	On CB: **show spx**
	d. All transit PE units are correctly configured.	**show spx debug port** *unit/slot/port* (for all SPX LAG members)
	e. CB configuration is correct. SPX is enabled (**spx cb-enable** is present in configuration).	On CB: **show running-config**
	f. There is an SPX port or SPX LAG connection from the CB to the PE unit.	On CB: **show running-config** On CB: **show spx** **show spx debug port** *unit/slot/port* (for all SPX LAG members)
	g. Is the PE unit stuck in sync?	Contact technical support.
2. Topology not supported.	Is the configuration blocked?	Review "Invalid Topology" message on console for details. If no message appears, check that maximum configuration limits for PEs or CBs have not been exceeded.
3. CB cannot assign PE ID.	Ports and connections are valid. PE ID is available (not already in use or reserved).	The following message in the CB port log indicates the pe-id is reserved, but the topology of the joining PE does not match the reserved configuration: "No available ID: must remove unused "pe-id." In this case, you should remove the unused pe-id configuration.
4. Image mismatch.	Is there a major image mismatch?	**show stack** **show spx**
	Path to FTP server is configured correctly. The image folder is present. FTP server is connected.	**show running-config** Ping the server address to verify connectivity.
	Auto image copy is disabled.	From CB: **show stack detail** If auto image copy should be disabled, manually download the image from the CB to the PE unit, or reset the PE unit.
5. Configuration mismatch.	PE configuration on CB matches actual PE modules.	If the PE configuration on the CB does not match actual PE modules, remove the

TABLE 16 Campus Fabric general troubleshooting checklist (continued)

Problem	Items to check	Related commands and instructions
		reserved configuration on the CB. Issue a **no spx unit** *ID* command to remove the reserved configuration of the PE unit *ID*. This causes the CB to relearn the correct modules for the PE unit. If the **no spx unit** *xx* command is blocked due to the configuration on the PE unit, remove the erroneous configuration.
6. A connected PE unit detaches from the CB.	SPX LAG or SPX port status.	If ports are down, investigate reasons. If ports are up, a further issue is indicated. Collect **supportsave spx** output for both CB and PE for further analysis. Call technical support for assistance.
7. SPX LAG issues are evident.	LAG configuration is correct. Connections on both sides of the LAG match. Speeds on both sides match. Ports in LAG are operational. Topology is valid.	**show spx debug lag all** Adding the **distributed** keyword to the command. Without the keyword, the command output is derived from the CB. The following example displays information on LAG members and connections directly from PE units. **show spx debug lag all distributed all-pe**
8. LAG issues between PE ports are evident.	LAG configuration is correct.	**show lag**
9. Multicast traffic not being forwarded to one or more virtual ports.	Virtual ports are part of mcache OIF.	Run the **show ip pim vrf vrf1 mc** command on both the router and the joined PE locally and compare output.
	Issues persist.	Contact technical support for any additional assistance.



© 2018 ARRIS Enterprises LLC. All rights reserved.
Ruckus Wireless, Inc., a wholly owned subsidiary of ARRIS International plc.
350 West Java Dr., Sunnyvale, CA 94089 USA
www.ruckuswireless.com