CONFIGURATION GUIDE

Ruckus FastIron IP Multicast Configuration Guide, 08.0.61

Supporting FastIron Software Release 08.0.61

Part Number: 53-1005201-03
Publication Date: 1 March 2019

Copyright, Trademark and Proprietary Rights Information

© 2019 ARRIS Enterprises LLC. All rights reserved.

No part of this content may be reproduced in any form or by any means or used to make any derivative work (such as translation, transformation, or adaptation) without written permission from ARRIS International plc and/or its affiliates ("ARRIS"). ARRIS reserves the right to revise or change this content from time to time without obligation on the part of ARRIS to provide notification of such revision or change.

Export Restrictions

These products and associated technical data (in print or electronic form) may be subject to export control laws of the United States of America. It is your responsibility to determine the applicable regulations and to comply with them. The following notice is applicable for all products or technology subject to export control:

These items are controlled by the U.S. Government and authorized for export only to the country of ultimate destination for use by the ultimate consignee or end-user(s) herein identified. They may not be resold, transferred, or otherwise disposed of, to any other country or to any person other than the authorized ultimate consignee or end-user(s), either in their original form or after being incorporated into other items, without first obtaining approval from the U.S. government or as otherwise authorized by U.S. law and regulations.

Disclaimer

THIS CONTENT AND ASSOCIATED PRODUCTS OR SERVICES ("MATERIALS"), ARE PROVIDED "AS IS" AND WITHOUT WARRANTIES OF ANY KIND, WHETHER EXPRESS OR IMPLIED. TO THE FULLEST EXTENT PERMISSIBLE PURSUANT TO APPLICABLE LAW, ARRIS DISCLAIMS ALL WARRANTIES, EXPRESS OR IMPLIED, INCLUDING, BUT NOT LIMITED TO, IMPLIED WARRANTIES OF MERCHANTABILITY AND FITNESS FOR A PARTICULAR PURPOSE, TITLE, NON-INFRINGEMENT, FREEDOM FROM COMPUTER VIRUS, AND WARRANTIES ARISING FROM COURSE OF DEALING OR COURSE OF PERFORMANCE. ARRIS does not represent or warrant that the functions described or contained in the Materials will be uninterrupted or error-free, that defects will be corrected, or are free of viruses or other harmful components. ARRIS does not make any warranties or representations regarding the use of the Materials in terms of their completeness, correctness, accuracy, adequacy, usefulness, timeliness, reliability or otherwise. As a condition of your use of the Materials, you warrant to ARRIS that you will not make use thereof for any purpose that is unlawful or prohibited by their associated terms of use.

Limitation of Liability

IN NO EVENT SHALL ARRIS, ARRIS AFFILIATES, OR THEIR OFFICERS, DIRECTORS, EMPLOYEES, AGENTS, SUPPLIERS, LICENSORS AND THIRD PARTY PARTNERS, BE LIABLE FOR ANY DIRECT, INDIRECT, SPECIAL, PUNITIVE, INCIDENTAL, EXEMPLARY OR CONSEQUENTIAL DAMAGES, OR ANY DAMAGES WHATSOEVER, EVEN IF ARRIS HAS BEEN PREVIOUSLY ADVISED OF THE POSSIBILITY OF SUCH DAMAGES, WHETHER IN AN ACTION UNDER CONTRACT, TORT, OR ANY OTHER THEORY ARISING FROM YOUR ACCESS TO, OR USE OF, THE MATERIALS. Because some jurisdictions do not allow limitations on how long an implied warranty lasts, or the exclusion or limitation of liability for consequential or incidental damages, some of the above limitations may not apply to you.

Trademarks

ARRIS, the ARRIS logo, Ruckus, Ruckus Wireless, Ruckus Networks, Ruckus logo, the Big Dog design, BeamFlex, ChannelFly, EdgeIron, FastIron, HyperEdge, ICX, IronPoint, OPENG, SmartCell, Unleashed, Xclaim, ZoneFlex are trademarks of ARRIS International plc and/or its affiliates. Wi-Fi Alliance, Wi-Fi, the Wi-Fi logo, the Wi-Fi CERTIFIED logo, Wi-Fi Protected Access (WPA), the Wi-Fi Protected Setup logo, and WMM are registered trademarks of Wi-Fi Alliance. Wi-Fi Protected Setup™, Wi-Fi Multimedia™, and WPA2™ are trademarks of Wi-Fi Alliance. All other trademarks are the property of their respective owners.

Contents

Preface **9**
- Document Conventions 9
  - Notes, Cautions, and Warnings 9
- Command Syntax Conventions 10
- Document Feedback 10
- Ruckus Product Documentation Resources 10
- Online Training Resources 11
- Contacting Ruckus Customer Services and Support 11
  - What Support Do I Need? 11
  - Open a Case 11
  - Self-Service Resources 11

About This Document **13**
- Supported hardware 13
- What's new in this document 13
- How command information is presented in this guide 13

IPv4 Multicast VLAN Traffic Reduction **15**
- PIM convergence on MAC movement 15
- IGMP snooping overview 15
  - Queriers and non-queriers 16
  - VLAN-specific configuration 17
  - Tracking and fast leave 17
  - Support for IGMP snooping and Layer 3 multicast routing together on the same device 17
  - Hardware resources for IGMP and PIM-SM snooping 17
  - Configuration notes and feature limitations for IGMP snooping and Layer 3 multicast routing 17
- IGMP snooping configuration 18
  - IGMP snooping mcache entries and group addresses 19
  - IGMP snooping software resource limits 19
  - Changing the maximum number of supported IGMP snooping mcache entries 19
  - Setting the maximum number of IGMP snooping group addresses 19
  - Enabling IGMP snooping globally on the device 20
  - Configuring the IGMP mode 20
  - Configuring the IGMP version 21
  - Configuring static groups to specific ports 22
  - Disabling IGMP snooping on a VLAN 22
  - Modifying the age interval for group membership entries 22
  - Modifying the query interval (active IGMP snooping mode only) 22
  - Modifying the maximum response time 22
  - Configuring report control 23
  - Modifying the wait time before stopping traffic when receiving a leave message 23
  - Modifying the multicast cache age time 24
  - Enabling or disabling error and warning messages 24
  - Configuring static router ports 24
  - Configuring the Layer 2 mode IPv4 querier address 24
  - Turning off static group proxy 25
  - Enabling IGMP V3 membership tracking and fast leave for the VLAN 25

Enabling fast leave for IGMP V2 ... 26
Enabling fast convergence ... 26
Displaying the IGMP snooping configuration ... 26
Displaying IGMP snooping errors ... 27
Displaying IGMP group information ... 28
Displaying IGMP snooping mcache information ... 29
Displaying software resource usage for VLANs ... 30
Displaying the status of IGMP snooping traffic ... 30
Displaying querier information ... 31
Clearing the IGMP mcache ... 34
Clearing the mcache on a specific VLAN ... 34
Clearing traffic on a specific VLAN ... 34
Clearing IGMP counters on VLANs ... 34
Disabling the flooding of unregistered IPv4 multicast frames in an IGMP-snooping-enabled VLAN ... 35
PIM SM traffic snooping overview ... 35
Application examples of PIM SM traffic snooping ... 35
Configuration notes and limitations for PIM SM snooping ... 37
PIM SM snooping configuration ... 38
Enabling or disabling PIM SM snooping ... 38
Enabling PIM SM snooping on a VLAN ... 39
Disabling PIM SM snooping on a VLAN ... 39
PIM SM snooping show commands ... 39
Displaying PIM SM snooping information ... 39
Displaying PIM SM snooping information on a Layer 2 switch ... 39
Displaying PIM SM snooping information for a specific group or source group pair ... 40

IPv6 Multicast VLAN Traffic Reduction ... 43
MLD snooping overview ... 43
Support for MLD snooping and Layer 3 IPv6 multicast routing together on the same device ... 44
Forwarding mechanism in hardware ... 44
Hardware resources for MLD and PIMv6 SM snooping ... 45
MLD snooping configuration notes and feature limitations ... 45
MLD snooping-enabled queriers and non-queriers ... 46
MLD and VLAN configuration ... 46
MLDv1 with MLDv2 ... 47
MLD snooping configuration ... 47
Configuring the hardware and software resource limits ... 47
Configuring the global MLD mode ... 48
Modifying the age interval ... 49
Modifying the query interval (active MLD snooping mode only) ... 49
Configuring the global MLD version ... 49
Configuring report control ... 49
Modifying the wait time before stopping traffic when receiving a leave message ... 50
Modifying the multicast cache aging time ... 50
Disabling error and warning messages ... 50
Configuring the MLD mode for a VLAN ... 51
Disabling MLD snooping for the VLAN ... 51
Configuring the MLD version for the VLAN ... 51
Configuring the MLD version for individual ports ... 51
Configuring static groups ... 52
Configuring the Layer 2 Mode IPv6 Querier Address ... 52

Configuring static router ports....52
Disabling static group proxy....53
Enabling MLDv2 membership tracking and fast leave for the VLAN....53
Configuring fast leave for MLDv1....53
Enabling fast convergence....54
Displaying MLD snooping information....54
Displaying MLD snooping error information....54
Displaying MLD group information....55
Displaying MLD snooping mcache information....56
Displaying status of MLD snooping traffic....58
Displaying MLD snooping information by VLAN....58
Clearing MLD counters on all VLANs....59
Clearing the mcache on all VLANs....59
Clearing the mcache on a specific VLAN....59
Clearing traffic counters on a specific VLAN....60
Disabling the flooding of unregistered IPv6 multicast frames in an MLD-snooping-enabled VLAN....60
PIM6 SM traffic snooping overview....60
Application examples of PIM6 SM traffic snooping....60
Configuration notes and limitations for PIM6 SM snooping....62
PIM6 SM snooping configuration....63
Enabling or disabling PIM6 SM snooping....63
Enabling PIM6 SM snooping on a VLAN....64
Disabling PIM6 SM snooping on a VLAN....64
Displaying PIM6 SM snooping information....64
Displaying PIM6 SM snooping for a VLAN....65

IPv4 Multicast Protocols....67
Overview of IP multicasting....67
Multicast terms....67
Support for Multicast Multi-VRF....68
changes to system-max command....68
Show and clear command support....68
Changing global IP multicast parameters....69
Concurrent support for multicast routing and snooping....69
Defining the maximum number of PIM cache entries....69
Setting the Maximum Number of IGMP Group Addresses....70
Changing IGMP V1 and V2 parameters....70
Adding an interface to a multicast group....72
Multicast non-stop routing....72
Configuration considerations....73
Configuring multicast non-stop routing....73
Displaying the multicast NSR status....73
Passive multicast route insertion....74
Configuring PMRI....75
Displaying hardware-drop....75
IP multicast boundaries....75
Configuration considerations....76
Configuring multicast boundaries....76
Displaying multicast boundaries....77
PIM Dense....77
Initiating PIM multicasts on a network....78

Pruning a multicast tree....78
Grafts to a multicast tree....80
PIM DM versions....81
Configuring PIM DM....81
Failover time in a multi-path topology....84
Configuring a DR priority....84
Displaying basic PIM Dense configuration information....85
Displaying all multicast cache entries in a pruned state....85
Displaying all multicast cache entries....86
PIM convergence on MAC movement....89
PIM Sparse....89
PIM Sparse device types....90
RP paths and SPT paths....91
Configuring PIM Sparse....91
ACL-based RP assignment....95
IP multicast PIM neighbor filter....96
Limitations....97
Configuring IPv4 PIM neighbor filtering....97
PIM Passive....98
Multicast Outgoing Interface (OIF) list optimization....98
Displaying system values....99
Displaying PIM resources....99
Displaying PIM Sparse configuration information and statistics....100
Displaying basic PIM Sparse configuration information....101
Displaying a list of multicast groups....103
Displaying BSR information....104
Displaying candidate RP information....105
Displaying RP-to-group mappings....106
Displaying RP Information for a PIM Sparse group....106
Displaying the RP set list....107
Displaying multicast neighbor information....108
Displaying the PIM multicast cache....109
Displaying the PIM multicast cache for DIT....111
Clearing the PIM forwarding cache....112
Displaying PIM traffic statistics....112
Clearing the PIM message counters....114
Displaying PIM RPF....114
Configuring Multicast Source Discovery Protocol....114
Peer Reverse Path Forwarding flooding....116
Source Active caching....116
Configuring MSDP....116
Disabling an MSDP peer....117
Designating the interface IP address as the RP IP address....118
Filtering MSDP source-group pairs....118
Filtering incoming and outgoing Source-Active messages....119
Filtering advertised Source-Active messages....120
Displaying MSDP information....121
Displaying MSDP RPF-Peer....126
Displaying MSDP Peer....126
Displaying MSDP VRF RPF-Peer....126

Clearing MSDP information....127
Configuring MSDP mesh groups....128
Configuring MSDP mesh group....129
MSDP Anycast RP....130
Configuring MSDP Anycast RP....130
Example....131
PIM Anycast RP....134
Configuring PIM Anycast RP....134
Static multicast routes....136
IGMP Proxy....136
IGMP proxy configuration notes....137
IGMP proxy limitations....137
Configuring IGMP Proxy....137
Filtering groups in proxy report messages....138
Displaying IGMP Proxy information....138
IGMP V3....139
Default IGMP version....141
Compatibility with IGMP V1 and V2....141
Globally enabling the IGMP version....141
Enabling the IGMP version per interface setting....141
Enabling the IGMP version on a physical port within a virtual routing interface....142
Enabling membership tracking and fast leave....142
Creating a static IGMP group....143
Setting the query interval....143
Setting the group membership time....143
Setting the maximum response time....144
Displaying IGMPv3 information....144
Clearing the IGMP group membership table....145
Displaying static IGMP groups....146
Clearing IGMP traffic statistics....148
Source-Specific Multicast....149
Configuring PIM SSM group range....150
Configuring multiple SSM group ranges....150
IGMPv2 SSM mapping....151

IPv6 Multicast Protocols....155
IPv6 PIM Sparse....155
PIM Sparse router types....156
RP paths and SPT paths....156
RFC 3513 and RFC 4007 compliance for IPv6 multicast scope-based forwarding....156
Configuring PIM Sparse....157
IPv6 PIM-Sparse mode....157
Configuring IPv6 PIM-SM on a virtual routing interface....157
Enabling IPv6 PIM-SM for a specified VRF....158
Configuring BSRs....158
Enabling Source-Specific Multicast....164
Configuring a DR priority....165
Passive Multicast Route Insertion....165
Displaying system values....166
Displaying PIM Sparse configuration information and statistics....167
Clearing the IPv6 PIM forwarding cache....180

Clearing the IPv6 PIM message counters....180
Updating PIM Sparse forwarding entries witha new RP configuration....180
Clearing the IPv6 PIM traffic 181
Defining the maximum number of IPv6 PIM cache entries....181
Configuring a static multicast route within a VRF....181
Configuring the route precedence by specifying the route types....182
Configuring IPv6 PIM neighbor filtering....183
IPv6 PIM convergence on MAC movement....184
PIM Anycast RP....184
Configuring PIM Anycast RP....184
Multicast Listener Discovery and source-specific multicast protocols....187
Enabling MLDv2....187
Configuring MLD parameters for default and non-default VRFs....187
Configuring MLD parameters at the interface level....190
Displaying MLD group information....192
Displaying MLD definitions for an interface....192
Displaying MLD settings....193
Displaying static MLD groups....194
Displaying MLD traffic....194
Clearing IPv6 MLD traffic....195
Clearing the IPv6 MLD group membership table cache....195
IPv6 Multicast Boundaries....196
Configuration considerations....196
Configuring multicast boundaries....196
Displaying multicast boundaries....197

IP Multicast Switch Port Extender Stacking....199
Switch Port Extender and IP Multicast....199
Multicast E-CID and IEE 802.1BR....199
Multicast E-CID Manager....199
Considerations for multicast forwarding on PE units....199
Layer 2 multicast in an SPX configuration....200
Layer 3 multicast in an SPX configuration....202
Displaying multicast SPX information....204
IP multicast hardware entry optimization....205
How disabling IP multicast hardware entry optimization works....205
Disabling multicast hardware entry optimization....206

Preface

- Document Conventions 9
- Command Syntax Conventions 10
- Document Feedback 10
- Ruckus Product Documentation Resources 10
- Online Training Resources 11
- Contacting Ruckus Customer Services and Support 11

Document Conventions

The following table lists the text conventions that are used throughout this guide.

TABLE 1 Text Conventions

Convention	Description	Example
`monospace`	Identifies command syntax examples	`device(config)# interface ethernet 1/1/6`
bold	User interface (UI) components such as screen or page names, keyboard keys, software buttons, and field names	On the **Start** menu, click **All Programs**.
italics	Publication titles	Refer to the *Ruckus Small Cell Release Notes* for more information.

Notes, Cautions, and Warnings

Notes, cautions, and warning statements may be used in this document. They are listed in the order of increasing severity of potential hazards.

NOTE
A NOTE provides a tip, guidance, or advice, emphasizes important information, or provides a reference to related information.

ATTENTION
An ATTENTION statement indicates some information that you must read before continuing with the current action or task.



CAUTION
A CAUTION statement alerts you to situations that can be potentially hazardous to you or cause damage to hardware, firmware, software, or data.



DANGER
A DANGER statement indicates conditions or situations that can be potentially lethal or extremely hazardous to you. Safety labels are also attached directly to products to warn of these conditions or situations.

Command Syntax Conventions

Bold and italic text identify command syntax components. Delimiters and operators define groupings of parameters and their logical relationships.

Convention	Description
bold text	Identifies command names, keywords, and command options.
italic text	Identifies a variable.
[ ]	Syntax components displayed within square brackets are optional.
	Default responses to system prompts are enclosed in square brackets.
{ **x** | **y** | **z** }	A choice of required parameters is enclosed in curly brackets separated by vertical bars. You must select one of the options.
x | **y**	A vertical bar separates mutually exclusive elements.
< >	Nonprinting characters, for example, passwords, are enclosed in angle brackets.
...	Repeat the previous element, for example, *member*[*member*...].
\	Indicates a "soft" line break in command examples. If a backslash separates two lines of a command input, enter the entire command at the prompt without the backslash.

Document Feedback

Ruckus is interested in improving its documentation and welcomes your comments and suggestions.

You can email your comments to Ruckus at ruckus-docs@arris.com.

When contacting us, include the following information:

- Document title and release number
- Document part number (on the cover page)
- Page number (if appropriate)

For example:

- Ruckus SmartZone Upgrade Guide, Release 5.0
- Part number: 800-71850-001 Rev A
- Page 7

Ruckus Product Documentation Resources

Visit the Ruckus website to locate related documentation for your product and additional Ruckus resources.

Release Notes and other user documentation are available at https://support.ruckuswireless.com/documents. You can locate the documentation by product or perform a text search. Access to Release Notes requires an active support contract and a Ruckus Support Portal user account. Other technical documentation content is available without logging in to the Ruckus Support Portal.

White papers, data sheets, and other product documentation are available at https://www.ruckuswireless.com.

Online Training Resources

To access a variety of online Ruckus training modules, including free introductory courses to wireless networking essentials, site surveys, and Ruckus products, visit the Ruckus Training Portal at https://training.ruckuswireless.com.

Contacting Ruckus Customer Services and Support

The Customer Services and Support (CSS) organization is available to provide assistance to customers with active warranties on their Ruckus products, and customers and partners with active support contracts.

For product support information and details on contacting the Support Team, go directly to the Ruckus Support Portal using https://support.ruckuswireless.com, or go to https://www.ruckuswireless.com and select **Support**.

What Support Do I Need?

Technical issues are usually described in terms of priority (or severity). To determine if you need to call and open a case or access the self-service resources, use the following criteria:

- Priority 1 (P1)—Critical. Network or service is down and business is impacted. No known workaround. Go to the **Open a Case** section.
- Priority 2 (P2)—High. Network or service is impacted, but not down. Business impact may be high. Workaround may be available. Go to the **Open a Case** section.
- Priority 3 (P3)—Medium. Network or service is moderately impacted, but most business remains functional. Go to the **Self-Service Resources** section.
- Priority 4 (P4)—Low. Requests for information, product documentation, or product enhancements. Go to the **Self-Service Resources** section.

Open a Case

When your entire network is down (P1), or severely impacted (P2), call the appropriate telephone number listed below to get help:

- Continental United States: 1-855-782-5871
- Canada: 1-855-782-5871
- Europe, Middle East, Africa, Central and South America, and Asia Pacific, toll-free numbers are available at https://support.ruckuswireless.com/contact-us and Live Chat is also available.
- Worldwide toll number for our support organization. Phone charges will apply: +1-650-265-0903

We suggest that you keep a physical note of the appropriate support number in case you have an entire network outage.

Self-Service Resources

The Ruckus Support Portal at https://support.ruckuswireless.com offers a number of tools to help you to research and resolve problems with your Ruckus products, including:

- Technical Documentation—https://support.ruckuswireless.com/documents

- Community Forums—https://forums.ruckuswireless.com/ruckuswireless/categories
- Knowledge Base Articles—https://support.ruckuswireless.com/answers
- Software Downloads and Release Notes—https://support.ruckuswireless.com/#products_grid
- Security Bulletins—https://support.ruckuswireless.com/security

Using these resources will help you to resolve some issues, and will provide TAC with additional data from your troubleshooting analysis if you still require assistance through a support case or RMA. If you still require help, open and manage your case at https://support.ruckuswireless.com/case_management.

About This Document

- Supported hardware....13
- What's new in this document....13
- How command information is presented in this guide....13

Supported hardware

This guide supports the following Ruckus products:

- Ruckus ICX 7750
- Ruckus ICX 7450
- Ruckus ICX 7250
- Ruckus ICX 7150

What's new in this document

FastIron 08.0.61 supports the Ruckus ICX 7150. There are no new IP multicast features added in this release, however, support for L3 IPv4/IPv6 multicast features is introduced and has been noted where applicable in this guide.

NOTE
Refer to the *Ruckus FastIron Features and Standards Support Matrix* for a complete list of IP multicast features supported on the Ruckus ICX 7150.

How command information is presented in this guide

For all new content supported in FastIron release 08.0.20 and later, command information is documented in a standalone command reference guide.

In the *Ruckus FastIron Command Reference*, the command pages are in alphabetical order and follow a standard format to present syntax, parameters, mode, usage guidelines, examples, and command history.

NOTE
Many commands introduced before FastIron release 08.0.20 are also included in the guide.

IPv4 Multicast VLAN Traffic Reduction

- PIM convergence on MAC movement....15
- IGMP snooping overview....15
- IGMP snooping configuration....18
- Disabling the flooding of unregistered IPv4 multicast frames in an IGMP-snooping-enabled VLAN....35
- PIM SM traffic snooping overview....35
- PIM SM snooping configuration....38
- PIM SM snooping show commands....39

PIM convergence on MAC movement

PIM convergence occurs when the PIM module is notified of a topology change.

The notification is triggered upon a change in port status, Reverse Path Forwarding (RPF) failure in the hardware, or by the unicast routing module if there is a change in the Layer 3 topology. If the topology change occurs without setting off any of the two events or if the Layer 3 topology change is not notified by the unicast routing module, PIM convergence does not take place.

If there is a change in the source traffic at the Layer 2 interface level, the RPF check fails because only loose RPF check is supported (loose RPF check detects the change in the source traffic only at the Layer 3 interface level). A notification for a change in the source traffic at the Layer 2 interface level can be triggered by establishing a signaling process for MAC address movement. The MAC address movement notification triggers RPF check on MAC movement for directly connected sources. The MAC address movement notification can be triggered by configuring the **ip multicast-routing rpf-check mac-movement** command. The MAC address movement notification triggers a notification to the PIM module which results in convergence. PIM convergence is supported in both PIM Sparse and PIM Dense modes.

PIM convergence on MAC movement is supported on the Ruckus ICX 7xxx switches.

> **NOTE**
> PIM convergence on MAC movement is applicable only in a topology where the multicast source port and PIM routers are in the same Layer 2 domain.

IGMP snooping overview

When a device processes a multicast packet, by default, it broadcasts the packets to all ports except the incoming port of a VLAN. Packets are flooded by hardware without going to the CPU. This behavior causes some clients to receive unwanted traffic.

IGMP snooping provides multicast containment by forwarding traffic to only the ports that have IGMP receivers for a specific multicast group (destination address). A device maintains the IGMP group membership information by processing the IGMP reports and leave messages, so traffic can be forwarded to ports receiving IGMP reports.

An IPv4 multicast address is a destination address in the range of 224.0.0.0 to 239.255.255.255. Addresses of 224.0.0.X are reserved. Because packets destined for these addresses may require VLAN flooding, devices do not snoop in the reserved range. Data packets destined to addresses in the reserved range are flooded to the entire VLAN by hardware, and mirrored to the CPU. Multicast data packets destined for the non-reserved range of addresses are snooped. A client must send IGMP reports in order to receive traffic.

An IGMP device's responsibility is to broadcast general queries periodically, and to send group queries when receiving a leave message, to confirm that none of the clients on the port still want specific traffic before removing the traffic from the port. IGMP

V2 lets clients specify what group (destination address) will receive the traffic but not to specify the source of the traffic. IGMP V3 is for source-specific multicast traffic, adding the capability for clients to INCLUDE or EXCLUDE specific traffic sources. An IGMP V3 device port state could be INCLUDE or EXCLUDE, and there are different types of group records for client reports.

The interfaces respond to general or group queries by sending a membership report that contains one or more of the following records associated with a specific group:

- Current-state record that indicates from which sources the interface wants to receive and not receive traffic. This record contains the source address of interfaces and whether or not traffic will be included (IS_IN) or not excluded (IS_EX) from this source.
- Filter-mode-change record. If the interface state changes from IS_IN to IS_EX, a TO_EX record is included in the membership report. Likewise, if the interface state changes from IS_EX to IS_IN, a TO_IN record appears in the membership report.
- An IGMP V2 leave report is equivalent to a TO_IN (empty) record in IGMP V3. This record means that no traffic from this group will be received regardless of the source.
- An IGMP V2 group report is equivalent to an IS_EX (empty) record in IGMP V3. This record means that all traffic from this group will be received regardless of source.
- Source-list-change record. If the interface wants to add or remove traffic sources from its membership report, the report can contain an ALLOW record, which includes a list of new sources from which the interface wishes to receive traffic. It can also contain a BLOCK record, which lists the current traffic sources from which the interface wants to stop receiving traffic.

IGMP protocols provide a method for clients and a device to exchange messages, and let the device build a database indicating which port wants what traffic. The protocols do not specify forwarding methods. They require IGMP snooping or multicast protocols such as PIM to handle packet forwarding. PIM can route multicast packets within and outside a VLAN, while IGMP snooping can switch packets only within a VLAN.

If a VLAN is not IGMP snooping-enabled, it floods multicast data and control packets to the entire VLAN in hardware. When snooping is enabled, IGMP packets are trapped to the CPU. Data packets are mirrored to the CPU in addition to being VLAN flooded. The CPU then installs hardware resources, so that subsequent data packets can be switched to desired ports in hardware without going to the CPU. If there is no client report or port to queriers for a data stream, the hardware resource drops it.

Queriers and non-queriers

An IGMP snooping-enabled Ruckus device can be configured as a querier (active) or non-querier (passive). An IGMP querier sends queries; a non-querier listens for IGMP queries and forwards them to the entire VLAN. VLANs can be independently configured to be queriers or non-queriers. If a VLAN has a connection to a PIM-enabled port on another router, the VLAN must be configured as a non-querier. When multiple IGMP snooping devices are connected together, and there is no connection to a PIM-enabled port, one of the devices must be configured as a querier. If multiple devices are configured as queriers, after these devices exchange queries, then all except the winner stop sending queries. The device with the lowest address becomes the querier. Although the system will work when multiple devices are configured as queriers, Ruckus recommends that only one device (preferably the one with the traffic source) is configured as a querier.

The non-queriers always forward multicast data traffic and IGMP messages to router ports which receive IGMP queries or PIM hellos. Ruckus recommends that you configure the device with the data traffic source (server) as a querier. If a server is attached to a non-querier, the non-querier always forwards traffic to the querier regardless of whether there are any clients on the querier.

NOTE
In a topology of one or more connecting devices, at least one device must be running PIM configured as active. Otherwise, none of the devices can send out queries, and traffic cannot be forwarded to clients.

VLAN-specific configuration

IGMP snooping can be enabled on some VLANs or on all VLANs. Each VLAN can be independently configured to be a querier or non-querier and can be configured for IGMP V2 or IGMP V3. In general, the **ip multicast** commands apply globally to all VLANs except those configured with VLAN-specific multicast commands. The VLAN-specific multicast commands supersede the global **ip multicast** commands.

IGMP snooping can be configured for IGMP V2 or IGMP V3 on individual ports of a VLAN. An interface or router sends the queries and reports that include its IGMP version specified on it. The version configuration only applies to sending queries. The snooping device recognizes and processes IGMP V2 and IGMP V3 packets regardless of the version configuration.

To avoid version deadlock, an interface retains its version configuration even when it receives a report with a lower version.

Tracking and fast leave

Ruckus devices support fast leave for IGMP V2, and tracking and fast leave for IGMP V3. Fast leave stops the traffic immediately when the port receives a leave message. Tracking traces all IGMP V3 clients. Refer to Enabling IGMP V3 membership tracking and fast leave for the VLAN on page 25 and Enabling fast leave for IGMP V2 on page 26.

Support for IGMP snooping and Layer 3 multicast routing together on the same device

The Ruckus device supports global Layer 2 IP multicast traffic reduction (IGMP snoopoing) and Layer 3 multicast routing (PIM-Sparse or PIM-Dense) together on the same device in the full Layer 3 software image, as long as the Layer 2 feature configuration is at the VLAN level.

Hardware resources for IGMP and PIM-SM snooping

Ruckus devices allocate/program fdb/mac entries to achieve multicast snooping in hardware. If a data packet does not match any of these resources, it might be sent to the CPU, which increases the CPU burden. This can happen if the device runs out of hardware resources, or is unable to install resources for a specific matching address due to a hashing collision.

The hardware hashes addresses into available fdb/mac entries, with some addresses hashed into the same entry. If the collision number in an entry is more than the hardware chain length, the resource cannot be installed.

Configuration notes and feature limitations for IGMP snooping and Layer 3 multicast routing

The following notes apply to all devices:

- Layer 2 IGMP multicast is automatically enabled with Layer 3 multicast routing. If Layer 3 multicast routing is enabled on your system, do not attempt to enable Layer 2 IGMP snooping.
- The default IGMP version is V2.
- A user can configure the maximum numbers of group address entries.

- An IGMP device can be configured to rate-limit the forwarding IGMP V2 membership reports to queriers.
- The device supports static groups. The device acts as a proxy to send IGMP reports for the static groups when receiving queries.
- A user can configure static router ports to force all multicast traffic to these specific ports.
- If a VLAN has a connection to a PIM-enabled port on another router, the VLAN must be configured as a non-querier (passive). When multiple snooping devices connect together and there is no connection to PIM ports, one device must be configured as a querier (active). If multiple devices are configured as active (queriers), only one will keep sending queries after exchanging queries.
- The querier must configure an IP address to send out queries.
- IGMP snooping requires hardware resource. Hardware resource is installed only when there is data traffic. If resource is inadequate, the data stream without a resource is mirrored to the CPU in addition to being VLAN flooded, which can cause high CPU usage. Ruckus recommends that you avoid global enabling of snooping unless necessary.
- IGMP snooping requires clients to send membership reports in order to receive data traffic. If a client application does not send reports, you must configure static groups on the snooping VLAN to force traffic to client ports. Note that servers (traffic sources) are not required to send IGMP memberships.
- Support for VSRP together with IGMP snooping on the same interface.
- When VSRP or VSRP-aware is configured on a VLAN, only IGMP version 2 is recommended; IGMP version 3 is not recommended.
- Each VLAN can independently enable or disable IGMP, or configure IGMP v2 or IGMP v3.
- IGMP/PIM-SM snooping over Multi-Chassis Trunking is supported on ICX devices.

IGMP snooping configuration

Configuring IGMP snooping on a Ruckus device consists of the following global, VLAN-specific, and port-specific tasks:

Perform the following global IGMP snooping tasks:

- Configuring the IGMP V3 snooping software resource limits
- Enabling IGMP snooping globally on the device
- Configuring the global IGMP mode
- Configuring the global IGMP version
- Modifying the age interval for group membership entries
- Modifying the query interval (active IGMP snooping mode only)
- Modifying the maximum response time
- Configuring report control (rate limiting)
- Modifying the wait time before stopping traffic when receiving a leave message
- Modifying the multicast cache age time
- Enabling or disabling error and warning messages

Perform the following VLAN-specific IGMP snooping tasks:

- Configuring the IGMP mode for a VLAN (active or passive)
- Disabling IGMP snooping on a VLAN
- Configuring the IGMP version for a VLAN
- Configuring static router ports

- Turning off static group proxy
- Enabling IGMP V3 membership tracking and fast leave for the VLAN
- Enabling fast leave for IGMP
- Enabling fast convergence

Perform the following port-specific IGMP snooping task:

- Configuring the IGMP version for individual ports in a VLAN

IGMP snooping mcache entries and group addresses

An IGMP snooping group address entry is created when an IGMP join message is received for a group. An IGMP snooping mcache entry is created when data traffic is received for that group. Each mcache entry represents one data stream, and multiple mcache entries (up to 32) can share the same hardware (MAC) address entry. The egress port list for the mcache entry is obtained from the IGMP group address entry. If there is no existing IGMP group address entry when an mcache entry is created, data traffic for that multicast group is dropped in hardware. If there is an existing IGMP group address entry when an mcache is created, data traffic for that multicast group is switched in hardware.

IGMP snooping software resource limits

These are the IGMP snooping mcache resource limits for Ruckus devices.

- Ruckus ICX 7150 switches support 3072 IGMP snooping mcache entries for Layer 2 multicast.
- ICX 7750 switches support 8192 IGMP snooping mcache entries.
- ICX 7750 routers support 6000 IGMP snooping mcache entries.
- ICX 7250 devices support 8192 IGMP snooping mcache entries.
- ICX 7450 devices support 8192 IGMP snooping mcache entries.

Changing the maximum number of supported IGMP snooping mcache entries

You can configure the **system-max igmp-snoop-mcache** command to change the maximum number of IGMP snooping cache entries supported on a device.

```
Device(config)#system-max igmp-snoop-mcache 2000
```

Syntax: [no] system-max igmp-snoop-mcache *num*

The *num* variable is a value from 256 through 8192. The default is 512.

Setting the maximum number of IGMP snooping group addresses

The configured number of IGMP group addresses is the upper limit of an expandable database. Client memberships exceeding the group limit are not processed. Configure the **system-max igmp-snoop-group-addr** command to define the maximum number of IGMP group addresses.

```
Device(config)# system-max igmp-snoop-group-addr 1600
```

Syntax: [no] system-max igmp-snoop-group-addr *num*

The *num* variable is a value from 256 to 8192. The default for IGMP snooping group addresses is 4096.

Enabling IGMP snooping globally on the device

When you globally enable IGMP snooping, you can specify IGMP V2 or IGMP V3. The **ip multicast version** command enables IGMP V3.

```
device(config)#ip multicast version 3
```

Syntax: [no] ip multicast version [**2** | **3**]

If you do not specify a version number, IGMP V2 is assumed.

Configuration notes for Layer 3 devices

- If Layer 3 multicast routing is enabled on your system, do not attempt to enable Layer 2 IGMP snooping. Layer 2 IGMP snooping is automatically enabled with Layer 3 multicast routing.
- If the "route-only" feature is enabled on the Layer 3 Switch, then IP multicast traffic reduction will not be supported.
- IGMP snooping is not supported on the default VLAN of Layer 3 Switches.

Disabling the flooding of unregistered IPv6 multicast frames in an MLD-snooping-enabled VLAN

NOTE
Disabling the flooding of unregistered IPv6 multicast frames in an MLD-snooping-enabled VLAN is supported only on the Ruckus ICX 7750 (standalone and stacking) platform.
Support for this feature on the Ruckus ICX 7750 was introduced in FastIron 8.0.10d. In releases prior to FastIron 8.0.30, support for this feature on the Ruckus ICX 7750 was for devices in standalone mode only.

To disable the flooding of unregistered IPv6 multicast frames in an MLD-snooping-enabled VLAN, use the **ipv6 multicast disable-flooding** command in global configuration mode.

The following example disables flooding of unregistered IPv6 multicast frames.

```
Device(config)# ipv6 multicast disable-flooding
```

Configuring the IGMP mode

You can configure active or passive IGMP modes on the Ruckus device. The default mode is passive. If you specify an IGMP mode for a VLAN, it overrides the global setting.

- **Active** - When active IGMP mode is enabled, a Ruckus device actively sends out IGMP queries to identify multicast groups on the network, and makes entries in the IGMP table based on the group membership reports it receives.

  NOTE
  Routers in the network generally handle this operation. Use the active IGMP mode only when the device is in a stand-alone Layer 2 Switched network with no external IP multicast router attachments. In this case, enable the active IGMP mode on only one of the devices and leave the other devices configured for passive IGMP mode.

- **Passive** - When passive IGMP mode is enabled, it forwards reports to the router ports which receive queries. IGMP snooping in the passive mode does not send queries. However, it forwards queries to the entire VLAN.

Configuring the global IGMP mode

To globally set the IGMP mode to active, enter the following command.

```
device(config)#ip multicast active
```

Syntax: [no] ip multicast [**active** | **passive**]

If you do not enter either **active** or **passive**, the passive mode is assumed.

Configuring the IGMP mode for a VLAN

If you specify an IGMP mode for a VLAN, it overrides the global setting.

To set the IGMP mode for VLAN 20 to active, enter the following commands.

```
device(config)#vlan 20
device(config-vlan-20)#multicast active
```

Syntax: [no] multicast [**active** | **passive**]

Configuring the IGMP version

Use the procedures in this section to specify the IGMP version.

Configuring the global IGMP version

To globally specify IGMP V2 or IGMP V3, refer to Enabling IGMP snooping globally on the device on page 20.

Configuring the IGMP version for a VLAN

You can specify the IGMP version for a VLAN. For example, the following commands configure VLAN 20 to use IGMP V3.

```
device(config)#vlan 20
device(config-vlan-20)#multicast version 3
```

Syntax: [no] multicast version [**2** | **3**]

If no IGMP version is specified, then the globally-configured IGMP version is used. If an IGMP version is specified for individual ports, those ports use that version, instead of the VLAN version.

Configuring the IGMP version for individual ports in a VLAN

You can specify the IGMP version for individual ports in a VLAN. For example, the following commands configure ports 1/2/4, 1/2/5, and 1/2/6 to use IGMP V3. The other ports either use the IGMP version specified with the multicast version command, or the globally-configured IGMP version.

```
device(config)#vlan 20
device(config-vlan-20)#multicast port-version 3 ethernet 1/2/4 to 1/2/6
```

Syntax: [no] multicast port-version [**2** | **3**] **ethernet***unit/slot/port* [**ethernet** *unit/slot/port*| **to***unit/slot/port*]

To specify a list of ports, enter each port as **ethernet***unit/slot/port* followed by a space. For example, **ethernet** 1/1/24 **ethernet** 1/3/24 **ethernet** 1/4/17.

To specify a range of ports, enter the first port in the range as **ethernet***port* followed by the last port in the range. For example, **ethernet** 1/1/1 **to** 1/1/8.

You can combine lists and ranges in the same command. For example: **enable ethernet** 1/1/1 **to** 1/1/8 **ethernet** 1/1/24 **ethernet** 1/4/24 **ethernet** 1/4/17.

Configuring static groups to specific ports

A snooping-enabled VLAN cannot forward multicast traffic to ports that do not receive IGMP membership reports. If clients cannot send reports, you can configure a static group which applies to specific ports. The static group allows packets to be forwarded to the static group ports even though they have no client membership reports.

```
device(config)#vlan 20
device(config-vlan-20)#multicast static-group 224.1.1.1 count 2 ethernet 1/1/3 ethernet 1/1/5 to 1/1/7
```

Disabling IGMP snooping on a VLAN

When IGMP snooping is enabled globally, you can still disable it for a specific VLAN. For example, the following commands cause IGMP snooping to be disabled for VLAN 20. This setting overrides the global setting.

```
device(config)#vlan 20
device(config-vlan-20)#multicast disable-multicast-snoop
```

Syntax: [no] multicast disable-multicast-snoop

Modifying the age interval for group membership entries

When the device receives a group membership report, it makes an entry for that group in the IGMP group table. The age interval specifies how long the entry can remain in the table before the device receives another group membership report. When multiple devices connect together, all devices must be configured for the same age interval, which must be at least twice the length of the query interval, so that missing one report won't stop traffic. Non-querier age intervals must be the same as the age interval of the querier.

To modify the age interval, enter the following command.

```
device(config)#ip multicast age-interval 280
```

Syntax: [no] ip multicast age-interval *interval*

The *interval* parameter specifies the aging time. You can specify a value from 20 through 26000 seconds. The default is 260 seconds.

Modifying the query interval (active IGMP snooping mode only)

If IP multicast traffic reduction is set to active mode, you can modify the query interval to specify how often the device sends general queries. When multiple queriers connect together, they must all be configured with the same query interval.

To modify the query interval, enter the following command.

```
device(config)#ip multicast query-interval 120
```

Syntax: [no] ip multicast query-interval *interval*

The *interval* parameter specifies the time between queries. You can specify a value from 10 through 3600 seconds. The default is 125 seconds.

Modifying the maximum response time

The maximum response time is the number of seconds that a client can wait before responding to a query sent by the switch.

To change the IPv4 multicast maximum response time, enter the following command.

```
device(config)#ip multicast max-response-time 5
```

To change the IPv6 multicast maximum response time, enter the following command.

```
device(config)# ipv6 multicast max-response-time 5
```

Syntax: [no] ip multicast max-response-time *interval*

Syntax: [no] ipv6 multicast max-response-time *interval*

For *interval* variable, enter a value from 1 through 25 seconds. The default is 10 seconds.

Configuring report control

A device in passive mode forwards reports and leave messages from clients to the upstream router ports that are receiving queries.

You can configure report control to rate-limit report forwarding within the same group to no more than once every 10 seconds. This rate-limiting does not apply to the first report answering a group-specific query.

> **NOTE**
> This feature applies to IGMP V2 only. The leave messages are not rate limited.

IGMP V2 membership reports of the same group from different clients are considered to be the same and are rate-limited.

Use the **ip multicast report-control** command to alleviate report storms from many clients answering the upstream router query.

```
device(config)#ip multicast report-control
```

Syntax: [no] ip multicast-report-control

The original command, **ip igmp-report-control** , has been renamed to **ip multicast report-control** . The original command is still accepted; however, it is renamed when you configure a **show configuration** command.

Modifying the wait time before stopping traffic when receiving a leave message

You can define the wait time before stopping traffic to a port when a leave message is received. The device sends group-specific queries once per second to ask if any client in the same port still needs this group. Due to internal timer granularity, the actual wait time is between n and (n+1) seconds (n is the configured value).

```
device(config)#ip multicast leave-wait-time 1
```

Syntax: [no] ip multicast leave-wait-time *num*

num is the number of seconds from 1 through 5. The default is 2 seconds.

Modifying the multicast cache age time

You can set the time for an mcache to age out when it does not receive traffic. The traffic is hardware switched. One minute before aging out an mcache, the device mirrors a packet of this mcache to CPU to reset the age. If no data traffic arrives within one minute, this mcache is deleted. A lower value quickly removes resources consumed by idle streams, but it mirrors packets to CPU often. A higher value is recommended only data streams are continually arriving.

```
device(config)#ip multicast mcache-age 180
```

Syntax: [no] ip multicast mcache-age *num*

num is the number of seconds from 60 through 3600. The default is 60 seconds.

NOTE
The mcache age value configured may not expire accurately. You may notice a delay of 0 to 60 seconds.

Enabling or disabling error and warning messages

The device prints error or warning messages when it runs out of software resources or when it receives packets with the wrong checksum or groups. These messages are rate-limited. You can turn off these messages by entering the following command.

```
device(config)#ip multicast verbose-off
```

Syntax: [no] ip multicast verbose-off

Configuring static router ports

The Ruckus device forwards all multicast control and data packets to router ports which receive queries. Although router ports are learned, you can force multicast traffic to specified ports even though these ports never receive queries. To configure static router ports, enter the following commands.

```
device(config)#vlan 70
device(config-vlan-70)#multicast router-port ethernet 1/1/4 to 1/1/5 ethernet 1/1/8
```

Syntax: **[no] multicast router-port ethernet** *unit/slot/port* [**ethernet** *unit/slot/port* | **to** *unit/slot/port*]

To specify a list of ports, enter each port as **ethernet** *unit/slot/port* followed by a space. For example, **ethernet** *1/1/24* **ethernet** *1/2/17* **ethernet** *1/4/24*.

To specify a range of ports, enter the first port in the range as **ethernet** *unit/slot/port* followed by the last port in the range. For example, **ethernet** *1/1/1* **to** *1/1/8*.

You can combine lists and ranges in the same command. For example, **enable ethernet** *1/1/1* **to** *1/1/8* **ethernet** *1//1/24* **ethernet** *1/2/17* **ethernet** *1/4/24*.

Configuring the Layer 2 mode IPv4 querier address

You can configure an IPv4 querier address for every VLAN. This functionality is available only for multicast snooping.

In releases before FastIron 08.0.50, you cannot specifically configure a querier address per VLAN. Instead, in an IPv4 environment, the device internally attempts to select an address, either a VE address and a loopback address for a router image, or a management port address for a switch image.

Starting with FastIron release 08.0.50, you can configure a Layer 2 mode querier IP address. You can now plan an elected querier location suitable for your network, and use the most suitable querier location. This address can be configured regardless of

whether the current multicast snooping mode is set to active or passive. Once the mode changes to active, the configured IP address is used as a querier address. You can configure a different querier IP address for every VLAN.

1. Enter global configuration mode.

```
device# configure terminal
```

2. Enter VLAN configuration mode.

```
device(config)# vlan 100
```

3. Enter the **multicast querier-address** command followed by the IPv4 address.

The following example configures an IPv4 address as the multicast querier address for the VLAN.

```
device# configure terminal
device(config)# vlan 100
device(config-vlan-100)# multicast querier-address 2.2.2.2
```

Turning off static group proxy

If a device has been configured for static groups, it acts as a proxy and sends membership reports for the static groups when it receives general or group-specific queries. When a static group configuration is removed, it is deleted from the active group table immediately. However, leave messages are not sent to the querier, and the querier must age out the group. Proxy activity can be turned off. The default is on. To turn proxy activity off for VLAN 20, enter the following commands.

```
device(config)#vlan 20
device(config-vlan-20)#multicast proxy-off
```

Syntax: [no] multicast proxy-off

Enabling IGMP V3 membership tracking and fast leave for the VLAN

IGMP V3 gives clients membership tracking and fast leave capability. In IGMP V2, only one client on an interface needs to respond to a router's queries. This can leave some clients invisible to the router, making it impossible to track the membership of all clients in a group. When a client leaves the group, the device sends group-specific queries to the interface to see if other clients on that interface need the data stream of the client who is leaving. If no client responds, the device waits a few seconds before it stops the traffic. You can configure the wait time using the **ip multicast leave-wait-time** command.

IGMP V3 requires every client to respond to queries, allowing the device to track all clients. When tracking is enabled, and an IGMP V3 client sends a leave message and there is no other client, the device immediately stops forwarding traffic to the interface. This feature requires the entire VLAN be configured for IGMP V3 with no IGMP V2 clients. If a client does not send a report during the specified group membership time (the default is 260 seconds), that client is removed from the tracking list.

Every group on a physical port keeps its own tracking record. However, it can only track group membership; it cannot track by (source, group). For example, Client A and Client B belong to group1 but each receives traffic streams from different sources. Client A receives a stream from (source_1, group1) and Client B receives a stream from (source_2, group1). The device still waits for the configured leave-wait-time before it stops the traffic because these two clients are in the same group. If the clients are in different groups, then the waiting period is not applied and traffic is stopped immediately.

To enable the tracking and fast leave feature for VLAN 20, enter the following commands.

```
device(config)#vlan 20
device(config-vlan-20)#multicast tracking
```

Syntax: [no] multicast tracking

The membership tracking and fast leave features are supported for IGMP V3 only. If any port or any client is not configured for IGMP V3, then the multicast tracking command is ignored.

Enabling fast leave for IGMP V2

When a device receives an IGMP V2 leave message, it sends out multiple group-specific queries. If no other client replies within the waiting period, the device stops forwarding traffic. When fast-leave-v2 is configured, and when the device receives a leave message, it immediately stops forwarding to that port. The device does not send group specific-queries. When fast-leave-v2 is configured on a VLAN, you must not have multiple clients on any port that is part of the VLAN. In a scenario where two devices connect, the querier device should not be configured for fast-leave-v2 because the port might have multiple clients through the non-querier. The number of queries, and the waiting period (in seconds) can be configured using the **ip multicast leave-wait-time** command. The default is 2 seconds.

To configure fast leave for IGMP V2, enter the following commands.

```
device(config)#vlan 20
device(config-vlan-20)#multicast fast-leave-v2
```

Syntax: [no] multicast fast-leave-v2

Enabling fast convergence

In addition to sending periodic general queries, an active device sends general queries when it detects a new port. However, because the device does not recognize the other device's port up event, multicast traffic might still require up to the query-interval time to resume after a topology change. Fast convergence allows the device to listen to topology change events in Layer 2 protocols such as spanning tree, and then send general queries to shorten the convergence time.

If the Layer 2 protocol cannot detect a topology change, fast convergence may not work in some cases. For example, if the direct connection between two devices switches from one interface to another, the rapid spanning tree protocol (802.1w) considers this optimization, rather than a topology change. In this example, other devices will not receive topology change notifications, and will be unable to send queries to speed up the convergence. Fast convergence works well with the regular spanning tree protocol in this case.

To enable fast-convergency, enter the following commands.

```
device(config)#vlan 70
device(config-vlan-70)#multicast fast-convergence
```

Syntax: multicast fast-convergence

Displaying the IGMP snooping configuration

To display the global IGMP snooping configuration, enter the **show ip multicast** command at any level of the CLI.

```
device# show ip multicast
Summary of all vlans. Please use "sh ip mu vlan <vlan-id>" for details
Version=2, Intervals: Query=30, Group Age=80, Max Resp=10, Other Qr=65,
                      Leave Wait=2, Robustness=2

Replication resource sharing: Enabled.
VL20: dft V2, glb cfg active, 0 grp, 0 (*G) cache, no rtr port,
  My Query address: 20.1.1.1 (configured)
VL30: cfg V3, glb cfg active, track, 0 grp, 0 (SG) cache, no rtr port,
  My Query address: 30.1.1.1 (configured)
VL40: dft V2, glb cfg active, 0 grp, 0 (*G) cache, no rtr port,
  My Query address: None
VL100: dft V2, vlan cfg passive, 0 grp, 0 (*G) cache, rtr ports,
```

```
    router ports: e2/1/15(80) 10.1.1.1,
  My Query address: None
VL200: dft V2, vlan cfg passive, 0 grp, 0 (*G) cache, rtr ports,
    router ports: e2/1/15(80) 20.2.2.2,
  My Query address: None
ICX7250-24 Router#
```

To display the IGMP snooping information for a specific VLAN, enter the following command.

```
device# show ip multicast vlan 4050
Version=2, Intervals: Query=125, Group Age=260, Max Resp=10, Other Qr=255,
                      Leave Wait=2, Robustness=2

VL4050: dft V2, glb cfg passive, , pimsm (glb cfg), 0 grp, 100 (*G) cache, rtr ports,
    router ports: e1/1/1(85) 192.168.1.3, e1/1/41(85) 192.168.1.4, e1/1/4(85) 192.168.1.2,
  My Query address: None
  e1/1/1    has    0 grp, non-QR (passive), default V2 trunk
  e1/1/4    has    0 grp, non-QR (QR=192.168.1.2, age=80, mrt=100), default V2 trunk
  e1/1/41   has    0 grp, non-QR (passive), default V2 trunk
```

Syntax: show ip multicast vlan *vlan-id*

If you do not specify a *vlan-id* , information for all VLANs is displayed.

The following table describes the information displayed by the **show ip multicast vlan** command.

Field	Description
Version	The global IGMP version. In this example, the device is configured for IGMP version 2.
Query	How often a querier sends a general query on the interface. In this example, the general queries are sent every 125 seconds.
Group Age	The number of seconds membership groups can be members of this group before aging out.
Max Resp	The maximum number of seconds a client waits before replying to a query.
Other Qr	How long it took a switch with a lower IP address to become a new querier. This value is 2 x Query + Max Resp.
cfg	The IGMP version for the specified VLAN. In this example, VL10: cfg V3 indicates that VLAN 10 is configured for IGMP V3.
vlan cfg	The IGMP configuration mode, which is either passive or active.
pimsm	Indicates that PIM SM is enabled on the VLAN.
rtr port	The router ports, which are the ports receiving queries.

Displaying IGMP snooping errors

To display information about possible IGMP errors, enter the **show ip multicast error** command.

```
device#show ip multicast error
snoop SW processed pkt: 173, up-time 160 sec
```

Syntax: show ip multicast error

The following table describes the output from the **show ip multicast error** command.

Field	Description
SW processed pkt	The number of multicast packets processed by IGMP snooping.
up-time	The time since the IGMP snooping is enabled.

Displaying IGMP group information

To display default, maximum, current, and configured values for system maximum parameters, use the **show default values** command. The following output example does not show complete output; it shows only IGMP group values.

```
device(config)#show default values
System Parameters     Default    Maximum    Current    Configured
igmp-snoop-group-add  4096       8192       5000       5000
```

To display information about IGMP groups, enter the **show ip multicast group** command.

```
device#show ip multicast group
p-:physical, ST:static, QR:querier, EX:exclude, IN:include, Y:yes, N:no
VL70 : 3 groups, 4 group-port, tracking_enabled
      group            p-port   ST     QR     life mode    source
1     224.1.1.2        1/1/33   no     yes    120  EX      0
2     224.1.1.1        1/1/33   no     yes    120  EX      0
3     226.1.1.1        1/1/35   yes    yes    100  EX      0
4     226.1.1.1        1/1/33   yes    yes    100  EX      0
```

In this example, an IGMP V2 group is in EXCLUDE mode with a source of 0. The group only excludes traffic from the 0 (zero) source list, which actually means that all traffic sources are included.

To display detailed IGMP group information for a specific group, enter the **show ip multicast group detail** command.

```
device#show ip multicast group 226.1.1.1 detail
Display group 226.1.1.1 in all interfaces in details.
p-:physical, ST:static, QR:querier, EX:exclude, IN:include, Y:yes, N:no
VL70 : 1 groups, 2 group-port, tracking_enabled
      group            p-port   ST     QR     life mode    source
1     226.1.1.1        1/1/35   yes    yes    120  EX      0
    group: 226.1.1.1, EX, permit 0 (source, life):
      life=120, deny 0:
      group            p-port   ST     QR     life mode    source
2     226.1.1.1        1/1/33   yes    yes    120  EX      0
    group: 226.1.1.1, EX, permit 0 (source, life):
      life=120, deny 0:
```

If the tracking and fast leave features are enabled, you can display the list of clients that belong to a particular group by entering the following command.

```
device#show ip multicast group 224.1.1.1 tracking
Display group 224.1.1.1 in all interfaces with tracking enabled.
p-:physical, ST:static, QR:querier, EX:exclude, IN:include, Y:yes, N:no
VL70 : 1 groups, 1 group-port, tracking_enabled
      group            p-port   ST     QR     life mode    source
*** Note: has 1 static groups to the entire vlan, not displayed here
1     224.1.1.1        1/1/33   no     yes    100  EX      0
    receive reports from 1 clients: (age)
      (10.2.100.2 60)
```

Syntax: show ip multicast group [*group-address* [**detail**] [**tracking**]]

If you want a report for a specific multicast group, enter that group's address for *group-address* .

Enter detail to display the source list of a specific VLAN.

Enter tracking for information on interfaces that have tracking enabled.

The following table describes the information displayed by the **show ip multicast group** command.

Field	Description
group	The address of the group (destination address in this case, 224.1.1.1)
p-port	The physical port on which the group membership was received.

Field	Description
ST	**Yes** indicates that the IGMP group was configured as a static group; **No** means the address was learned from reports.
QR	**Yes** means the port is a querier port; No means it is not. A port becomes a non-querier port when it receives a query from a source with a lower source IP address than the device.
life	The number of seconds the group can remain in EXCLUDE mode. An EXCLUDE mode changes to INCLUDE mode if it does not receive an "IS_EX" or "TO_EX" message during a certain period of time. The default is 260 seconds. There is no life displayed in INCLUDE mode.
mode	Indicates current mode of the interface: INCLUDE or EXCLUDE. If the interface is in INCLUDE mode, it admits traffic only from the source list. If an interface is in EXCLUDE mode, it denies traffic from the source list and accepts the rest.
source	Identifies the source list that will be included or excluded on the interface. For example, if an IGMP V2 group is in EXCLUDE mode with a source of 0, the group excludes traffic from the 0 (zero) source list, which actually means that all traffic sources are included.

Displaying IGMP snooping mcache information

To display default, maximum, current, and configured values for system maximum parameters, use the **show default values** command. The following output example does not show complete output; it shows only IGMP mcache values.

```
device(config)#show default values
System Parameters      Default    Maximum    Current    Configured
igmp-snoop-mcache      512        8192       300        300
```

The IGMP snooping mcache contains multicast forwarding information for VLANs. To display information in the multicast forwarding mcache, enter the **show ip multicast mcache** command.

```
device#show ip multicast mcache
Example: (S G) cnt=: cnt is number of SW processed packets
    OIF: e1/1/22 TR(1/1/32,1/1/33), TR is trunk, e1/1/32 primary, e1/1/33 output
vlan 10, 1 caches. use 1 VIDX
1    (10.10.10.2 239.0.0.3) cnt=0
     OIF: tag e2
     age=2s up-time=2s change=2s vidx=8191 (ref-cnt=1)
```

Syntax: show ip multicast mcache

The following table describes the output of the **show ip multicast mcache** command.

Field	Description
(source group)	Source and group addresses of this data stream. (* group) means match group only; (source group) means match both.
cnt	The number of packets processed in software. Packets are switched in hardware, which increases this number slowly.
OIF	The output interfaces. If `entire vlan` is displayed, this indicates that static groups apply to the entire VLAN.
age	The mcache age. The mcache will be reset to 0 if traffic continues to arrive, otherwise the mcache will be aged out when it reaches the time defined by the **ip multicast mcache-age** command.
uptime	The up time of this mcache in seconds.
vidx	Vidx specifies output port list index. Range is from 4096 through 8191

Field	Description
ref-cnt	The vidx is shared among mcaches having the same output interfaces. Ref-cnt indicates the number of mcaches using this vidx.

Displaying software resource usage for VLANs

To display information about the software resources used, enter the **show ip multicast resource** command.

```
device#show ip multicast resource
                      alloc in-use  avail get-fail    limit  get-mem  size init
igmp group              256      1    255        0    32000        1    16  256
igmp phy port          1024      1   1023        0   200000        1    22 1024
.... entries deleted ...
snoop mcache entry      128      2    126        0     8192        3    56  128
total pool memory 109056 bytes
has total 2 forwarding hash
VIDX sharing hash    : size=2      anchor=997  2nd-hash=no  fast-trav=no
Available vidx: 4060. IGMP/MLD use 2
```

Syntax: show ip multicast resource

The following table describes the output displayed by the **show ip multicast resource** command.

Field	Description
alloc	The allocated number of units.
in-use	The number of units which are currently being used.
avail	The number of available units.
get-fail	This displays the number of resource failures. **NOTE** It is important to pay attention to this field.
limit	The upper limit of this expandable field. The limit of `multicast group` is configured by the **system-max igmp-snoop-group-addr** command. The limit of `snoop mcache entry` is configured by the **system-max igmp-snoop-mcache** command.
get-mem	The number of memory allocation. This number must continue to increase.
size	The size of a unit (in bytes).
init	The initial allocated amount of memory. More memory may be allocated if resources run out.
Available vidx	The output interface (OIF) port mask used by mcache. The entire device has a maximum of 4096 vidx. Different mcaches with the same OIF share the same vidx. If vidx is not available, the stream cannot be hardware-switched.

Displaying the status of IGMP snooping traffic

To display status information for IGMP snooping traffic, enter the **show ip multicast traffic** command.

```
device#show ip multicast traffic
IGMP snooping: Total Recv: 22, Xmit: 26
Q: query, Qry: general Q,  G-Qry: group Q,  GSQry: group-source Q, Mbr: member
Recv      QryV2     QryV3     G-Qry     GSQry     MbrV2     MbrV3     Leave
VL1           0         0         0         0         4         0         0
VL70         18         0         0         0         0         0         0
Recv       IsIN      IsEX      ToIN      ToEX     ALLOW     BLOCK   Pkt-Err
```

```
VL1             0          4          0          0          0          0          0
VL70            0          0          0          0          0          0          0
Send       QryV2      QryV3      G-Qry      GSQry      MbrV2      MbrV3
VL1             0          0          8          0          0          0
VL70            0          0          0          0          0         18
VL70   pimsm-snooping, Hello:    12,  Join/Prune:     9
```

Syntax: show ip multicast traffic

The following table describes the information displayed by the **show ip multicast traffic** command.

Field	Description
Q	Query
Qry	General Query
QryV2	Number of general IGMP V2 queries received or sent.
QryV3	Number of general IGMP V3 queries received or sent.
G-Qry	Number of group-specific queries received or sent.
GSQry	Number of group source-specific queries received or sent.
Mbr	The membership report.
MbrV2	The IGMP V2 membership report.
MbrV3	The IGMP V3 membership report.
IsIN	Number of source addresses that were included in the traffic.
IsEX	Number of source addresses that were excluded in the traffic.
ToIN	Number of times the interface mode changed from EXCLUDE to INCLUDE.
ToEX	Number of times the interface mode changed from INCLUDE to EXCLUDE.
ALLO	Number of times that additional source addresses were allowed on the interface.
BLK	Number of times that sources were removed from an interface.
Pkt-Err	Number of packets having errors, such as checksum.
Pimsm-snooping hello, join, prune	Number of PIM sparse hello, join, and prune packets

Displaying querier information

You can use the **show ip multicast vlan** command to display the querier information for a VLAN. This command displays the VLAN interface status and if there is any other querier present with the lowest IP address. The following list provides the combinations of querier possibilities:

- Active Interface with no other querier present
- Passive Interface with no other querier present
- Active Interface with other querier present
- Passive Interface with other querier present

Displaying the active interface with no other querier present

The following example shows the output in which the VLAN interface is active and no other querier is present with the lowest IP address.

```
device#show ip multicast vlan 10
Version=2, Intervals: Query=125, Group Age=260, Max Resp=10, Other Qr=260
```

```
VL10: dft
 V2, vlan cfg active, 0 grp, 0 (*G) cache, no rtr port,
Vlan Querier address configured: 20.1.1.1
  1/1/16  has    0 groups,
This interface is Querier
default V2
  1/1/24  has    0 groups,
This interface is Querier
default V2
  2/1/16  has    0 groups,
This interface is Querier
default V2
  2/1/24  has    0 groups,
This interface is Querier
default V2
  3/1/1   has    0 groups,
This interface is Querier
default V2
  3/1/4   has    0 groups,
This interface is Querier
default V2
```

Syntax: show ip multicast vlan *vlan-id*

If you do not specify a *vlan-id* , information for all VLANs is displayed.

Displaying the passive interface with no other querier present

The following example shows the output in which the VLAN interface is passive and no other querier is present with the lowest IP address.

```
device#show ip multicast vlan 10
Version=2, Intervals: Query=125, Group Age=260, Max Resp=10, Other Qr=260
VL10: dft V2, vlan cfg passive, 0 grp, 0 (*G) cache, no rtr port,
  1/1/16  has    0 groups,
This interface is non-Querier (passive)
default V2
  1/1/24  has    0 groups,
This interface is non-Querier (passive)
default V2
  2/1/16  has    0 groups,
This interface is non-Querier (passive)
default V2
  2/1/24  has    0 groups,
This interface is non-Querier (passive)
default V2
  3/1/1   has    0 groups,
This interface is non-Querier (passive)
default V2
  3/1/4   has    0 groups,
This interface is non-Querier (passive)
default V2
```

Displaying the active Interface with other querier present

The following example shows the output in which the VLAN interface is active and another querier is present with the lowest IP address.

```
device#show ip multicast vlan 10
Version=2, Intervals: Query=125, Group Age=260, Max Resp=10, Other Qr=260
VL10: dft V2, vlan cfg active, 7 grp, 6 (*G) cache, rtr ports,
    router ports: 2/1/24(260) 10.5.5.5, 3/1/4(260) 10.8.8.8,
  1/1/16  has    4 groups,
This interface is Querier
default V2
    group: 226.6.6.6, life = 240
    group: 228.8.8.8, life = 240
```

```
    group: 230.0.0.0, life = 240
    group: 224.4.4.4, life = 240
  1/1/24  has    1 groups,
This interface is Querier
default V2
    group: 228.8.8.8, life = 240
  2/1/16  has    4 groups,
This interface is Querier
default V2
    group: 226.6.6.6, life = 240
    group: 228.8.8.8, life = 240
    group: 230.0.0.0, life = 240
    group: 224.4.4.4, life = 240
  2/1/24  has    2 groups,
This interface is non-Querier
Querier is 10.5.5.5
Age is 0
Max response time is 100
default V2
  **** Warning! has V3 (age=0)  nbrs
    group: 234.4.4.4, life = 260
    group: 226.6.6.6, life = 260
  3/1/1   has    4 groups,
This interface is Querier
default V2
    group: 238.8.8.8, life = 260
    group: 228.8.8.8, life = 260
    group: 230.0.0.0, life = 260
    group: 224.4.4.4, life = 260
  3/1/4   has    1 groups,
This interface is non-Querier
Querier is 10.8.8.8
Age is 0
Max response time is 100
default V2
  **** Warning! has V3 (age=0)  nbrs
    group: 236.6.6.6, life = 260
```

Displaying the passive interface with other querier present

The following example shows the output in which the VLAN interface is passive and another querier is present with the lowest IP address.

```
device#show ip multicast vlan 10
Version=2, Intervals: Query=125, Group Age=260, Max Resp=10, Other Qr=260
VL10: dft V2, vlan cfg passive, 7 grp, 6 (*G) cache, rtr ports,
    router ports: 2/1/24(260) 10.5.5.5, 3/1/4(260) 10.8.8.8,
  1/1/16  has    4 groups,
This interface is non-Querier (passive)
default V2
    group: 226.6.6.6, life = 260
    group: 228.8.8.8, life = 260
    group: 230.0.0.0, life = 260
    group: 224.4.4.4, life = 260
  1/1/24  has    1 groups,
This interface is non-Querier (passive)
default V2
    group: 228.8.8.8, life = 260
  2/1/16  has    4 groups,
This interface is non-Querier (passive)
default V2
    group: 226.6.6.6, life = 260
    group: 228.8.8.8, life = 260
    group: 230.0.0.0, life = 260
    group: 224.4.4.4, life = 260
  2/1/24  has    2 groups,
This interface is non-Querier (passive)
Querier is 10.5.5.5
Age is 0
```

```
Max response time is 100
default V2
  **** Warning! has V3 (age=0)  nbrs
    group: 234.4.4.4, life = 260
    group: 226.6.6.6, life = 260
  3/1/1   has    4 groups,
This interface is non-Querier (passive)
default V2
    group: 238.8.8.8, life = 260
    group: 228.8.8.8, life = 260
    group: 230.0.0.0, life = 260
    group: 224.4.4.4, life = 260
  3/1/4   has    1 groups,
This interface is non-Querier (passive)
Querier is 10.8.8.8
Age is 0
Max response time is 100
default V2
  **** Warning! has V3 (age=0)  nbrs
    group: 236.6.6.6, life = 260
```

Clearing the IGMP mcache

To clear the mcache on all VLANs, enter the **clear ip multicast mcache** command.

```
device#clear ip multicast mcache
```

Syntax: clear ip multicast mcache

Clearing the mcache on a specific VLAN

To clear the mcache on a specific VLAN, enter the following command.

```
device#clear ip multicast vlan 10 mcache
```

Syntax: clear ip multicast vlan *vlan-id* **mcache**

The *vlan-id* parameter specifies the specific VLAN in which the mcache needs to be cleared.

Clearing traffic on a specific VLAN

To clear the traffic counters on a specific VLAN, enter the following command.

```
device# clear ip multicast vlan 10 traffic
```

Syntax: clear ip multicast vlan*vlan-id* **traffic**

The *vlan-id* parameter specifies the specific VLAN in which traffic counters need to be cleared.

Clearing IGMP counters on VLANs

To clear IGMP snooping on error and traffic counters for all VLANs, enter the **clear ip multicast counters** command.

```
device#clear ip multicast counters
```

Syntax: clear ip multicast counters

Disabling the flooding of unregistered IPv4 multicast frames in an IGMP-snooping-enabled VLAN

NOTE
Disabling the flooding of unregistered IPv4 multicast frames in an IGMP-snooping-enabled VLAN is supported on the following platforms:

- The Ruckus ICX 7750 (standalone and stacking)
- The Ruckus ICX 7450 (standalone and stacking)
- The Ruckus ICX 7250 (standalone and stacking)
- The Ruckus ICX 7150 (standalone and stacking)

Support for this feature on the Ruckus ICX 7750 was introduced in FastIron 8.0.10d. In releases prior to FastIron 8.0.30, support for this feature on the Ruckus ICX 7750 was for devices in standalone mode only.

To disable the flooding of unregistered IPv4 multicast frames in an IGMP-snooping-enabled VLAN, use the **ip multicast disable-flooding** command in global configuration mode.

The following example disables flooding of unregistered IPv4 multicast frames.

```
device(config)# ip multicast disable-flooding
```

PIM SM traffic snooping overview

When multiple PIM sparse routers connect through a snooping-enabled device, the Ruckus device always forwards multicast traffic to these routers. For example, PIM sparse routers R1, R2, and R3 connect through a device. Assume R2 needs traffic, and R1 sends it to the device, which forwards it to both R2 and R3, even though R3 does not need it. A PIM SM snooping-enabled device listens to join and prune messages exchanged by PIM sparse routers, and stops traffic to the router that sends prune messages. This allows the device to forward the data stream to R2 only.

PIM SM traffic snooping requires IGMP snooping to be enabled on the device. IGMP snooping configures the device to listen for IGMP messages. PIM SM traffic snooping provides a finer level of multicast traffic control by configuring the device to listen specifically for PIM SM join and prune messages sent from one PIM SM router to another through the device.

Application examples of PIM SM traffic snooping

Figure 1 shows an example application of the PIM SM traffic snooping feature. In this example, a device is connected through an IP router to a PIM SM group source that is sending traffic for two PIM SM groups. The device also is connected to a receiver for each of the groups.

When PIM SM traffic snooping is enabled, the device starts listening for PIM SM join and prune messages and IGMP group membership reports. Until the device receives a PIM SM join message or an IGMP group membership report, the device forwards IP multicast traffic out all ports. Once the device receives a join message or group membership report for a group, the device forwards subsequent traffic for that group only on the ports from which the join messages or IGMP reports were received.

In this example, the router connected to the receiver for group 239.255.162.1 sends a join message toward the group source. Because PIM SM traffic snooping is enabled on the device, the device examines the join message to learn the group ID, then makes a forwarding entry for the group ID and the port connected to the receiver router. The next time the device receives traffic

for 239.255.162.1 from the group source, the device forwards the traffic only on port 1/4/1, because that is the only port connected to a receiver for the group.

Notice that the receiver for group 239.255.162.69 is directly connected to the device. As a result, the device does not see a join message on behalf of the client. However, because IGMP snooping also is enabled, the device uses the IGMP group membership report from the client to select the port for forwarding traffic to group 239.255.162.69 receivers.

The IGMP snooping feature and the PIM SM traffic snooping feature together build a list of groups and forwarding ports for the VLAN. The list includes PIM SM groups learned through join messages as well as MAC addresses learned through IGMP group membership reports. In this case, even though the device never sees a join message for the receiver for group 239.255.162.69, the device nonetheless learns about the receiver and forwards group traffic to the receiver.

The device stops forwarding IP multicast traffic on a port for a group if the port receives a prune message for the group.

Notice that the ports connected to the source and the receivers are all in the same port-based VLAN on the device. This is required for the PIM SM snooping feature. The devices on the edge of the Global Ethernet cloud are configured for IGMP snooping and PIM SM traffic snooping. Although this application uses multiple devices, the feature has the same requirements and works the same way as it does on a single device.

The following figure shows another example application for PIM SM traffic snooping. This example shows devices on the edge of a Global Ethernet cloud (a Layer 2 Packet over SONET cloud). Assume that each device is attached to numerous other devices such as other Layer 2 Switches and Layer 3 Switches (routers).

NOTE
This example assumes that the devices are actually Ruckus devices running Layer 2 Switch software.

FIGURE 1 PIM SM traffic reduction in Global Ethernet environment

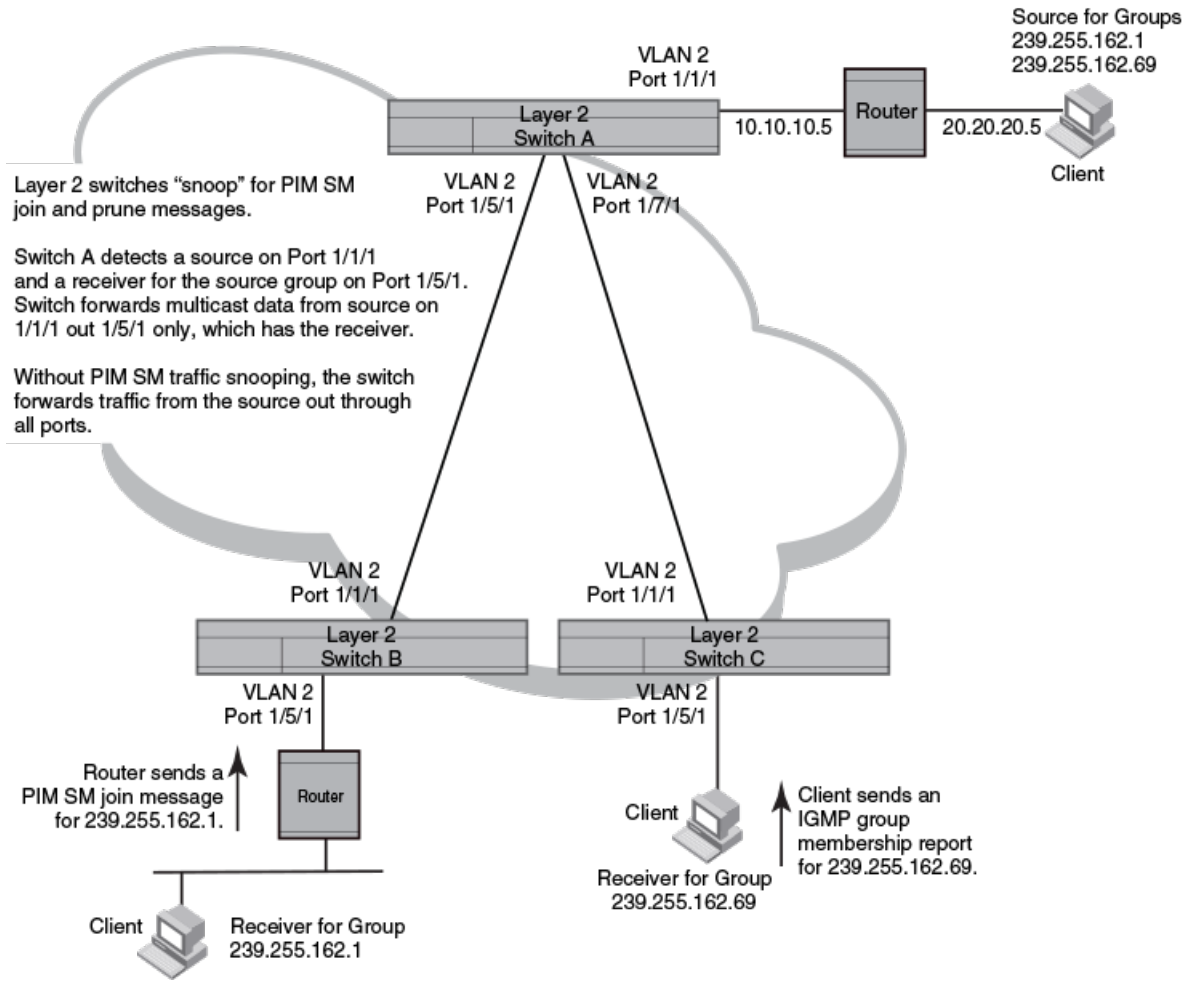

The devices on the edge of the Global Ethernet cloud are configured for IGMP snooping and PIM SM traffic snooping. Although this application uses multiple devices, the feature has the same requirements and works the same way as it does on a single device.

Configuration notes and limitations for PIM SM snooping

- PIM SM snooping applies only to PIM SM version 2 (PIM SM V2).
- PIM SM traffic snooping is supported in the Layer 2, base Layer 3, and full Layer 3 code.
- IGMP snooping must be enabled on the device that will be running PIM SM snooping. The PIM SM traffic snooping feature requires IGMP snooping.

  NOTE
  Use the passive mode of IGMP snooping instead of the active mode. The passive mode assumes that a router is sending group membership queries as well as join and prune messages on behalf of receivers. The active mode configures the device to send group membership queries.

- All the device ports connected to the source and receivers or routers must be in the same port-based VLAN.

- The PIM SM snooping feature assumes that the group source and the device are in different subnets and communicate through a router. The source must be in a different IP subnet than the receivers. A PIM SM router sends PIM join and prune messages on behalf of a multicast group receiver only when the router and the source are in different subnet. When the receiver and source are in the same subnet, they do not need the router in order to find one another. They find one another directly within the subnet.

The device forwards all IP multicast traffic by default. Once you enable IGMP snooping and PIM SM traffic snooping, the device initially blocks all PIM SM traffic instead of forwarding it. The device forwards PIM SM traffic to a receiver only when the device receives a join message from the receiver. Consequently, if the source and the downstream router are in the same subnet, and PIM SM traffic snooping is enabled, the device blocks the PIM SM traffic and never starts forwarding the traffic. This is because the device never receives a join message from the downstream router for the group. The downstream router and group find each other without a join message because they are in the same subnet.

NOTE
If the "route-only" feature is enabled on a Layer 3 switch, PIM SM snooping traffic is not supported.

PIM SM snooping configuration

Configuring PIM SM snooping on a Ruckus device consists of the following global and VLAN-specific tasks.

Perform the following global PIM SM snooping task:

- Enabling or disabling PIM SM snooping

Perform the following VLAN-specific PIM SM snooping tasks:

- Enabling PIM SM snooping on a VLAN
- Disabling PIM SM snooping on a VLAN

Enabling or disabling PIM SM snooping

Use PIM SM snooping only in topologies where multiple PIM sparse routers connect through a device. PIM SM snooping does not work on a PIM dense mode router which does not send join messages and traffic to PIM dense ports is stopped. A PIM SM snooping-enabled device displays a warning if it receives PIM dense join or prune messages.

To enable PIM sparse snooping globally, enter the **ip pimsm-snooping** command.

```
device(config)#ip pimsm-snooping
```

This command enables PIM SM traffic snooping. The PIM SM traffic snooping feature assumes that the network has routers that are running PIM SM.

NOTE
The device must be in passive mode before it can be configured for PIM SM snooping.

To disable the feature, enter the **no ip pimsm-snooping** command.

```
device(config)#no ip pimsm-snooping
```

If you also want to disable IP multicast traffic reduction, enter the **no ip multicast** command.

```
device(config)#no ip multicast
```

Syntax: [no] ip pimsm-snooping

Enabling PIM SM snooping on a VLAN

You can enable PIM SM snooping for a specific VLAN. For example, the following commands enable PIM SM snooping on VLAN 20.

```
device(config)#vlan 20
device(config-vlan-20)#multicast pimsm-snooping
```

Syntax: [no] multicast pimsm-snooping

Disabling PIM SM snooping on a VLAN

When PIM SM snooping is enabled globally, you can still disable it for a specific VLAN. For example, the following commands disable PIM SM snooping for VLAN 20. This setting overrides the global setting.

```
device(config)#vlan 20
device(config-vlan-20)#multicast disable-pimsm-snoop
```

Syntax: [no] multicast disable-pimsm-snoop

PIM SM snooping show commands

This section shows how to display information about PIM SM snooping, including:

- Displaying PIM SM snooping information on page 39
- Displaying PIM SM snooping information on a Layer 2 switch on page 39
- Displaying PIM SM snooping information for a specific group or source group pair on page 40

Displaying PIM SM snooping information

To display PIM SM snooping information, enter the **show ip multicast pimsm-snooping** command.

```
Device#show ip multicast pimsm-snooping
Example: Port: 7/3 (ref_count=1)
         ref_count: no of entries in pimsm snoop cache added this oif)

vlan 503, has 1 caches.
1    (* 225.1.1.1) has 3 pim join ports out of 4 OIF
     4/23 (ref_count=2), 4/13 (ref_count=1), 4/5 (ref_count=3),
```

Syntax: show ip multicast pimsm-snooping [*vlan-id*]

Use the *vlan-id* parameter to display PIM SM snooping information for a specific VLAN.

Refer to the *FastIron Command Reference* for more information on PIM SM commands.

Displaying PIM SM snooping information on a Layer 2 switch

You can display PIM SM snooping information for all groups by entering the following command at any level of the CLI on a Layer 2 Switch.

```
device# show ip multicast pimsm-snooping vlan 100
VLAN 100, has 2 caches
1(*230.1.1.1) has 1 pim join ports out of 1OIF
1(age=60)
1 has 1 src: 10.20.20.66(60)
```

```
2(* 230.2.2.2) has 1 pim join ports out of 1 OIF
1(age=60)
1 has 1 src: 10.20.20.66(60)
```

Syntax: show ip multicast pimsm-snooping vlan *vlan-id*

Enter the ID of the VLAN for the **vlan***vlan-id* parameter.

If you want to display PIM SM snooping information for one source or one group, enter a command as in the following example. The command also displays the (source, port) list of the group.

```
device# show ip multicst pimsm-snooping 230.1.1.1
Show pimsm snooping group 230.1.1.1 in all vlans
VLAN 10, has 2 caches
1(*230.1.1.1) has 1 pim join ports out of 1 OIF
1(age=120)
1 has 1 src:10.20.20.66(120)
```

Syntax: show ip multicast pimsm-snooping [*group-address* | *source-address*]

If the address you entered is within the range of source addresses, then the router treats it as the source address. Likewise, if the address falls in the range of group addresses, then the router assumes that you are requesting a report for that group.

The following table describes the information displayed by the **show ip multicast pimsm-snooping** command.

Field	Description
VLAN ID	The port-based VLAN to which the following information applies and the number of members in the VLAN.
PIM SM Neighbor list	The PIM SM routers that are attached to the Layer 2 Switch ports. The value following "expires" indicates how many seconds the Layer 2 Switch will wait for a hello message from the neighbor before determining that the neighbor is no longer present and removing the neighbor from the list.
Multicast Group	The IP address of the multicast group. **NOTE** The fid and CAM index values are used by Ruckus Technical Support for troubleshooting.
Forwarding Port	The ports attached to the group receivers. A port is listed here when it receives a join message for the group, an IGMP membership report for the group, or both.
PIMv2 Group Port	The ports on which the Layer 2 Switch has received PIM SM join messages for the group.
Source, Port list	The IP address of each PIM SM source and the Layer 2 Switch ports connected to the receivers of the source.

Refer to the *FastIron Command Reference* for information on PIM SM snooping commands.

Displaying PIM SM snooping information for a specific group or source group pair

To display PIM SM snooping information for a specific group, enter the following command at any level of the CLI.

```
device#show ip multicast pimsm-snooping 230.1.1.1
Show pimsm snooping group 230.1.1.1 in all vlans
vlan 10,has 2 caches.
1 (*230.1.1.1) has 1 pim join ports out of 1 OIF
```

```
   1(age=120)
   1 has 1 src:10.20.20.66(120)
```

To display PIM SM snooping information for a specific (source, group) pair, enter the following command at any level of the CLI.

```
device#show ip multicast pimsm-snooping 230.2.2.2 20.20.20.66
Show pimsm snooping source 10.20.20.66, group 230.2.2.2 in all vlans
vlan 10:(*230.2.2.2) has 1 pim join ports out of 2 OIF
   1(age=0)
   1 has 1 src:10.20.20.66(0)
```

Syntax: show ip multicast pimsm-snooping *group-address* [*source-ip-address*]

The Ruckus device determines which address is the group address and which one is the source address based on the ranges that the address fall into. If the address is within the range of source addresses, then the router treats it as the source address. Likewise, if the address falls in the range of group addresses, then the router assumes it is a group address.

The following table describes the information displayed by the **show ip multicast pimsm-snooping** command.

Field	Description
vlan	The VLAN membership ID of the source.
port	The port on which the source is sending traffic. In this example, the port number is 1.
age	The age of the port, in seconds.
src	The source address and age. The age (number of seconds) is indicated in brackets immediately following the source.

IPv6 Multicast VLAN Traffic Reduction

- MLD snooping overview 43
- MLD snooping configuration 47
- Displaying MLD snooping information 54
- Clearing MLD counters on all VLANs 59
- Clearing the mcache on all VLANs 59
- Clearing the mcache on a specific VLAN 59
- Clearing traffic counters on a specific VLAN 60
- Disabling the flooding of unregistered IPv6 multicast frames in an MLD-snooping-enabled VLAN 60
- PIM6 SM traffic snooping overview 60
- PIM6 SM snooping configuration 63
- Displaying PIM6 SM snooping information 64
- Displaying PIM6 SM snooping for a VLAN 65

MLD snooping overview

The default method a device uses to process an IPv6 multicast packet is to broadcast it to all ports except the incoming port of a VLAN. Packets are flooded by hardware without going to the CPU, which may result in some clients receiving unwanted traffic.

If a VLAN is not Multicast Listening Discovery (MLD) snooping-enabled, it floods IPv6 multicast data and control packets to the entire VLAN in hardware. When snooping is enabled, MLD packets are trapped to the CPU. Data packets are mirrored to the CPU and flooded to the entire VLAN. The CPU then installs hardware resources so subsequent data packets can be hardware-switched to desired ports without going through the CPU. If there is no client report, the hardware resource drops the data stream.

MLD protocols provide a way for clients and a device to exchange messages, and allow the device to build a database indicating which port wants what traffic. Since the MLD protocols do not specify forwarding methods, MLD snooping or multicast protocols such as IPv6 PIM-Sparse Mode (PIM6 SM) are required to handle packet forwarding. PIM6 SM can route multicast packets within and outside a VLAN, while MLD snooping can switch packets only within a VLAN.

MLD snooping provides multicast containment by forwarding traffic only to those clients that have MLD receivers for a specific multicast group (destination address). The device maintains the MLD group membership information by processing MLD reports and generating messages so traffic can be forwarded to ports receiving MLD reports. This is analogous to IGMP Snooping on Ruckus Layer 3 switches.

An IPv6 multicast address is a destination address in the range of FF00::/8. A limited number of multicast addresses are reserved. Because packets destined for the reserved addresses may require VLAN flooding, Data packets destined to these addresses are flooded to the entire VLAN by hardware and mirrored to the CPU. Multicast data packets destined to addresses outside the FF0X::00X range and FFXX:XXXX:XXXX:XXXX:XXXX:XXXX:1:2 are snooped. A client must send MLD reports in order to receive traffic.

An MLD device periodically sends general queries and sends group queries upon receiving a leave message, to ensure no other clients at the same port still want this specific traffic before removing it. MLDv1 allows clients to specify which group (destination IPv6 address) will receive traffic. (MLDv1 cannot choose the source of the traffic.) MLDv2 deals with source-specific multicasts, adding the capability for clients to INCLUDE or EXCLUDE specific traffic sources. An MLDv2 device's port state can either be in INCLUDE or EXCLUDE mode.

There are different types of group records for client reports. Clients respond to general queries by sending a membership report containing one or more of the following records associated with a specific group:

- **Current-state record** - Indicates the sources from which the client wants to receive or not receive traffic. This record contains the addresses of the multicast sources and indicates whether or not traffic will be included (IS_IN) or excluded (IS_EX) from that source address.
- **Filter-mode-change record** - If the client changes its current state from IS_IN to IS_EX, a TO_EX record is included in the membership report. Likewise, if a client current state changes from IS_EX to IS_IN, a TO_IN record appears in the membership report.
- **MLDv1 leave report** - Equivalent to a TO_IN (empty) record in MLDv2. This record means that no traffic from this group will be received, regardless of the source.
- **An MLDv1 group report** - Equivalent to an IS_EX (empty) record in MLDv2. This record means that all traffic from this group will be received, regardless of the source.
- **Source-list-change record** - If the client wants to add or remove traffic sources from its membership report, the report can include an ALLOW record, which contains a list of new sources from which the client wishes to receive traffic. The report can also contain a BLOCK record, which lists current traffic sources from which the client wants to stop receiving traffic.

Support for MLD snooping and Layer 3 IPv6 multicast routing together on the same device

The Ruckus device supports global Layer 2 IPv6 multicast traffic reduction (MLD snooping) and Layer 3 IPv6 multicast routing (PIM-Sparse) together on the same device in the full Layer 3 software image, as long as the Layer 2 feature configuration is at the VLAN level.

Forwarding mechanism in hardware

MAC-based forwarding implementation on ICX devices

Multicast Listening Discovery (MLD) snooping on ICX devices is based on MAC address entries. When an IPv6 multicast data packet is received, the packet destination MAC is matched with the MAC address entries in the IPv6 multicast table. If a match is found, packets are sent to the ports associated with the MAC address. If a match is not found, packets are flooded to the VLAN and copied to the CPU.

For IPv6 multicast, the destination MAC address is in the format 33-33-xx-yy-zz-kk, where xx-yy-zz-kk are the 32 lowest bits of the IPv6 multicast group address. For example, the IPv6 group address 0xFF3E:40:2001:660:3007:123:0034:5678 maps to the IPv6 MAC address 33-33-00-34-56-78.

For two multicast traffic streams, Source_1 and Group1 (S1,G1) and Source_2 and Group2 (S2,G2), with the same or different source addresses, if the lowest 32 bits of the 128-bit IPv6 group address are the same, they would map to the same destination MAC.

Hardware resources for MLD and PIMv6 SM snooping

Ruckus devices allocate/program fdb/mac entries and application VLAN (vidx) to achieve multicast snooping in hardware. If a data packet does not match any of these resources, it might be sent to the CPU, which increases the CPU burden. This can happen if the device runs out of hardware resource, or is unable to install resources for a specific matching address due to hashing collision. The hardware hashes addresses into available entries, with some addresses hashed into the same entry. If the collision number in an entry is more than the hardware chain length, the resource cannot be installed.

MLD snooping configuration notes and feature limitations

- Servers (traffic sources) are not required to send Multicast Listening Discovery (MLD) memberships.
- The default MLD version is V1, where the source address is not sensitive. In this version, (S1,G1) and (S2,G1) would be considered the same group as (*,G1).
- If MLDv2 is configured on any port of a VLAN, you can check the source information, but because MLD snooping is MAC based, (S,G) switching is not feasible.
- Hardware resources are installed only when there is data traffic.
- You can configure the maximum number of groups and the multicast cache (mcache) number.
- The device supports static groups applying to specific ports. The device acts as a proxy to send MLD reports for the static groups when receiving queries.
- A user can configure static router ports, forcing all multicast traffic to be sent to these ports.
- Ruckus devices support fast leave for MLDv1, which stops traffic immediately to any port that has received a leave message.
- Ruckus devices support tracking and fast leave for MLDv2, which tracks all MLDv2 clients. If the only client on a port leaves, traffic is stopped immediately.
- An MLD device can be configured as a querier (active) or non-querier (passive). Queriers send queries. Non-queriers listen for queries and forward them to the entire VLAN.
- Every VLAN can be independently configured as a querier or a non-querier.
- A VLAN that has a connection to an IPv6 PIM-enabled port on another router should be configured as a non-querier. When multiple snooping devices connect together and there is no connection to IPv6 PIM ports, only one device should be configured as the querier. If multiple devices are configured as active, only one will continue to send queries after the devices have exchanged queries. Refer to the MLD snooping-enabled queriers and non-queriers section.
- An MLD device can be configured to rate-limit the forwarding of MLDv1 membership reports to queriers.
- Because an IPv6 link-local address as the source address when sending queries, a global address is not required.
- The MLD implementation allows snooping on some VLANs or on all VLANs. MLD can be enabled or disabled independently for each VLAN. In addition, individual ports of a VLAN can be configured as MLDv1 and MLDv2. In general, global configuration commands such as **ipv6 multicast...**. apply to all VLANs except those with a local **multicast...** configuration, which supersedes the global configuration. Configuring the version on a port or a VLAN only affects the device sent query version. The device always processes all versions of client reports regardless of the version configured.
- MLD snooping requires hardware resources. If the device has insufficient resources, the data stream without a resource is mirrored to the CPU in addition to being VLAN flooded, which can cause high CPU usage. To avoid this situation, Ruckus recommends that you avoid enabling snooping globally unless necessary.
- To receive data traffic, MLD snooping requires clients to send membership reports. If a client does not send reports, you must configure a static group to force traffic to client ports.

- Multicast Router Discovery (MRD) messages are useful for determining which nodes attached to a switch have multicast routing enabled. This capability is useful in a Layer 2 bridge domain with snooping switches. By utilizing MRD messages, Layer 2 switches can determine where to send multicast source data and group membership messages. Multicast source data and group membership reports must be received by all multicast routers on a segment. Using the group membership protocol Query messages to discover multicast routers is insufficient due to query suppression.

Because Ruckus does not support MRD, this can lead to stream loss when non-Querier router ports age out on the Querier after the initial Query election. To avoid such stream loss, configure a static router port on the querier on each interface that connects to a non-querier snooping device.

On the ICX devices, if MLDv2 is configured on any port of a VLAN, you can check the source information, but because MLD snooping is MAC-based, (S,G) switching is not feasible.

MLD/PIMv6 SM snooping over Multi-Chasis Trunking is only supported on the Ruckus ICX 7750.

Use MLD v2 only in a source-specific application. Because each VLAN can be configured for the version independently, some VLANs might match (* G) while others match (S G)

MLD snooping-enabled queriers and non-queriers

An MLD snooping-enabled device can be configured as a querier (active) or non-querier (passive). An MLD querier sends queries; a non-querier listens for MLD queries and forwards them to the entire VLAN. When multiple MLD snooping devices are connected together, and there is no connection to an IPv6 PIM-enabled port, one of the devices should be configured as a querier. If multiple devices are configured as queriers, after multiple devices exchange queries, then all devices except the winner (the device with the lowest address) stop sending queries. Although the system works when multiple devices are configured as queriers, Ruckus recommends that only one device, preferably the one with the traffic source, is configured as the querier.

VLANs can also be independently configured as queriers or non-queriers. If a VLAN has a connection to an IPv6 PIM-enabled port on another router, the VLAN should be configured as a non-querier.

Because non-queriers always forward multicast data traffic and MLD messages to router ports which receive MLD queries or IPv6 PIM hellos, Ruckus recommends that you configure the devices with the data traffic source (server) as queriers. If a server is attached to a non-querier, the non-querier always forwards traffic to the querier regardless of whether or not there are clients on the querier.

NOTE
In a topology with one or more connected devices, at least one device must be running PIM, or configured as active. Otherwise, no devices can send queries, and traffic cannot be forwarded to clients.

To configure the MLD mode (querier or non-querier) on an MLD snooping-enabled device, refer to Configuring the global MLD mode on page 48. To configure the MLD mode on a VLAN, refer to Configuring the MLD mode for a VLAN on page 51.

MLD and VLAN configuration

You can configure MLD snooping on some VLANs or all VLANs. Each VLAN can be independently enabled or disabled for MLD snooping, or can be configured with MLDv1 or MLDv2. In general, the IPv6 MLD snooping commands apply globally to all VLANs except those configured with VLAN-specific MLD snooping commands. VLAN-specific MLD snooping commands supersede global IPv6 MLD snooping commands.

MLDv1 with MLDv2

MLD snooping can be configured as MLDv1 or MLDv2 on individual ports on a VLAN. An interface or router sends queries and reports that include the MLD version with which it has been configured. The version configuration applies only to the sending of queries. The snooping device recognizes and processes MLDv1 and MLDv2 packets regardless of the version configured.

NOTE
To avoid version deadlock, when an interface receives a report with a lower version than that for which it has been configured, the interface does not automatically downgrade the running MLD version.

MLD snooping configuration

Configuring Multicast Listening Discovery (MLD) snooping on an IPv6 device consists of the following global and VLAN-specific tasks.

MLD snooping global tasks

- Configuring hardware and software resource limits
- Disabling transmission and receipt of MLD packets on a port
- Configuring the MLD mode: active or passive (must be enabled for MLD snooping)
- Modifying the age interval
- Modifying the interval for query messages (active MLD mode only)
- Specifying the global MLD version
- Enabling and disabling report control (rate limiting)
- Modifying the leave wait time
- Modifying the mcache age interval
- Disabling error and warning messages

MLD snooping VLAN-specific tasks:

- Configuring the MLD mode for the VLAN: active or passive
- Enabling or disabling MLD snooping for the VLAN
- Configuring the MLD version for the VLAN
- Configuring the MLD version for individual ports
- Configuring static groups
- Configuring static router ports
- Disabling proxy activity for a static group
- Enabling client tracking and the fast leave feature for MLDv2
- Configuring fast leave for MLDv1
- Configuring fast-convergence

Configuring the hardware and software resource limits

The system supports up to 8K of hardware-switched multicast streams. The following are the resource limits:

NOTE
In Release 8.0.10a and later releases, ICX 7750 router image supports 6144 MLD snooping mcache entries; ICX 7750 switch image supports 8192 MLD snooping mcache entries.

TABLE 2 MLD snooping limits

Platform	Groups		Mcache	
	Default	Maximum	Default	Maximum
ICX 7150	1024	3072	512	3072
ICX 7250	4096	8192	512	8192
ICX 7450	4096	8192	512	8192
ICX 7750	4096	8192	512	6144

To define the maximum number of MLD snooping mcache entries, enter the **system-max mld-snoop-mcache** *num* command.

```
Device(config)#system-max mld-snoop-mcache 8000
```

Syntax:[no] system-max mld-snoop-mcache *num*

The *num* variable is a value from 256 to 8192. The default is 512. The configured number is the upper limit of an expandable database. Client memberships exceeding the group limits are not processed.

To define the maximum number of multicast group addresses supported, enter the **system-max mld-snoop-group-addr** *num* command.

```
Device(config)#system-max mld-snoop-group-addr 4000
```

Syntax:[no] system-max mld-snoop-group-addr *num*

For all devices, the *num* variable is a value from 256 to 8192. The default is 4096.

Configuring the global MLD mode

You can configure a Ruckus device for either active or passive (default) MLD mode. If you specify an MLD mode for a VLAN, the MLD mode overrides the global setting.

- Active - In active MLD mode, a device actively sends out MLD queries to identify IPv6 multicast groups on the network, and makes entries in the MLD table based on the group membership reports it receives from the network.
- Passive - In passive MLD mode, the device forwards reports to the router ports which receive queries. MLD snooping in passive mode does not send queries, but does forward queries to the entire VLAN.

To globally set the MLD mode to active, enter the **ipv6 multicast active** command.

```
device(config)#ipv6 multicast active
```

Syntax: [no] ipv6 multicast [**active** | **passive**]

Omitting both the **active** and **passive** keywords is the same as entering **ipv6 multicast passive** .

NOTE
The **ipv6 mld-snooping** command is replaced by the **ipv6 multicast** command; the **mld-snooping** command is replaced by the **multicast6** command.

Modifying the age interval

When the device receives a group membership report, it makes an entry in the MLD group table for the group in the report. The age interval specifies how long the entry can remain in the table without the device receiving another group membership report. When multiple devices connect together, all devices should be configured with the same age interval. The age interval should be at least twice that of the query interval, so that missing one report will not stop traffic. For a non-querier, the query interval should equal that of the querier.

To modify the age interval, enter a command such as the following.

```
device(config)#ipv6 multicast age-interval 280
```

Syntax:[no] ipv6 multicast age-interval *interval*

The interval parameter specifies the aging time. You can specify a value from 20 to 7200 seconds. The default is 260 seconds.

Modifying the query interval (active MLD snooping mode only)

If the MLD mode is set to active, you can modify the query interval, which specifies how often the Ruckus device sends group membership queries. By default, queries are sent every 60 seconds. When multiple queriers connect together, all queriers should be configured with the same interval.

To modify the query interval, enter the **ipv6 multicast query-interval** *interval* command.

```
Device(config)#ipv6 multicast query-interval 120
```

Syntax: [no] ipv6 multicast query-interval *interval*

The *interval* parameter specifies the interval between queries. You can specify a value from 10 to 3600 seconds. The default is 125 seconds.

Configuring the global MLD version

The default version is MLDv1. You can specify the global MLD version on the device as either MLDv1 or MLDv2. For example, the following command configures the device to use MLDv2.

```
device(config)#ipv6 multicast version 2
```

Syntax: [no] ipv6 multicast version {**1** | **2**}

You can also specify the MLD version for individual VLANs, or individual ports within VLANs. If no MLD version is specified for a VLAN, then the globally configured MLD version is used. If an MLD version is specified for individual ports in a VLAN, those ports use that version instead of the version specified for the VLAN or the globally specified version. The default is MLDv1.

Configuring report control

When a device is in passive mode, it forwards reports and leave messages from clients to the upstream router ports that are receiving queries.

You can configure report control to rate-limit report forwarding for the same group to no more than once per 10 seconds. This rate limiting does not apply to the first report answering a group-specific query.

NOTE
This feature applies to MLDv1 only. The leave messages are not rate limited.

MLDv1 membership reports for the same group from different clients are considered to be the same, and are rate-limited. This alleviates the report storm caused by multiple clients answering the upstream router query.

To enable report-control, enter the **ipv6 multicast report-control** command.

```
device(config)#ipv6 multicast report-control
```

Syntax: [no] ipv6 multicast report-control

Modifying the wait time before stopping traffic when receiving a leave message

You can define the wait time before stopping traffic to a port when the device receives a leave message for that port. The device sends group-specific queries once per second to determine if any client on the same port still needs the group.

```
Device(config)#ipv6 multicast leave-wait-time 1
```

Syntax: [no] ipv6 multicast leave-wait-time *num*

The *num* variable is a value from 1 to 5. The default is 2. Because of the internal timer accuracy, the actual wait time is between n and (n+1) seconds, where n is the configured value.

Modifying the multicast cache aging time

You can set the time for a multicast cache (mcache) to age out when it does not receive traffic. Two seconds before an mcache is aged out, the device mirrors a packet of the mcache to the CPU to reset the age. If no data traffic arrives within two seconds, the mcache is deleted.

Note that with ICX devices, where MAC-based MLD snooping is supported, more than one mcache can be mapped to the same destination MAC. Hence, when an mcache entry is deleted, the MAC entry may not be deleted. If you configure a lower value, the resource consumed by idle streams is quickly removed, but packets are mirrored to the CPU more frequently. Configure a higher value only when data streams are arriving consistently.

You can use the **show ipv6 multicast mcache** command to view the currently configured mcache age. Refer to the “Enabling or disabling PIM6 SM snooping” section.

To modify the multicast cache age out time, enter the **ipv6 multicast mcache-age** command.

```
Device(config)#ipv6 multicast mcache-age 180
```

Syntax: [no] ipv6 multicast mcache-age *num*

The *num* variable is a value from 60 to 3600 seconds, and the default is 60 seconds.

> **NOTE**
> The mcache age value configured may not expire accurately. You may notice a delay of 0 to 60 seconds.

Disabling error and warning messages

Error or warning messages are printed when the device runs out of software resources or when it receives packets with the wrong checksum or groups. These messages are rate limited. You can turn off these messages by entering the **ipv6 multicast verbose-off** command.

```
device(config)#ipv6 multicast verbose-off
```

Syntax: [no] ipv6 multicast verbose-off

Configuring the MLD mode for a VLAN

You can configure a VLAN for either the active or passive (default) MLD mode. The VLAN setting overrides the global setting:

- Active - In active MLD mode, the device actively sends out MLD queries to identify IPv6 multicast groups on the network, and makes entries in the MLD table based on the group membership reports it receives from the network.
- Passive - In passive MLD mode, the device forwards reports to router ports that receive queries. MLD snooping in the passive mode does not send queries. However, it does forward queries to the entire VLAN.

To set the MLD mode for VLAN 20 to active, enter the following commands.

```
device(config)#vlan 20
device(config-vlan-20)#multicast6 active
```

Syntax: [no] multicast6 [**active** | **passive**]

The default mode is passive.

Disabling MLD snooping for the VLAN

When MLD snooping is enabled globally, you can disable it for a specific VLAN. For example, the following commands disable MLD snooping for VLAN 20. This setting overrides the global setting for VLAN 20.

```
device(config)#vlan 20
device(config-vlan-20)#multicast6 disable-mld-snoop
```

Syntax: [no] multicast6 disable-mld-snoop

Configuring the MLD version for the VLAN

You can specify the MLD version for a VLAN. For example, the following commands configure VLAN 20 to use MLDv2.

```
device(config)#vlan 20
device(config-vlan-20)#multicast6 version 2
```

Syntax: [no] multicast6 version [**1** | **2**]

When **no** MLD version is specified, the globally-configured MLD version is used. If an MLD version is specified for individual ports, these ports use that version, instead of the version specified for the VLAN.

Configuring the MLD version for individual ports

You can specify the MLD version for individual ports in a VLAN. For example, the following commands configure ports 1/1/4, 1/1/5, 1/1/6 and 1/2/1 to use MLDv2. The other ports use the MLD version specified with the **multicast6 version** command, or the globally configured MLD version.

```
Device(config)#vlan 20
Device(config-vlan-20)#multicast6 port-version 2 ethernet 1/2/1 ethernet 1/1/4 to 1/1/6
```

Syntax: [no] multicast6 port-version [**1** | **2**] **ethernet** *unit/slot/port*

Configuring static groups

A snooping-enabled VLAN cannot forward multicast traffic to ports that do not receive MLD membership reports. To allow clients to send reports, you can configure a static group that applies to individual ports on the VLAN. You cannot configure a static group that applies to the entire VLAN.

The maximum number of supported static groups in a VLAN is 512, and the maximum number of supported static groups for individual ports in a VLAN is 256. The static group forwards packets to the static group ports even if they have no client membership reports. Configure a static group for specific ports on VLAN 20 using commands similar to the following.

```
device(config)#vlan 20
device(config-vlan-20)#multicast6 static-group ff05::100 count 2 ethe 1/1/3 ethe 1/1/5 to 1/1/7
```

Syntax: [no] multicast6 static-group *ipv6-address* [**count** *num*] [*unit/slot/port*]

The *ipv6-address* parameter is the IPv6 address of the multicast group.

The **count** is optional, which allows a contiguous range of groups. Omitting the count *num* is equivalent to the count being 1.

Configuring the Layer 2 Mode IPv6 Querier Address

You can configure an IPv6 querier address for every VLAN. This functionality is available only for multicast snooping.

In releases prior to FastIron 08.0.50, you could not specifically configure a querier address per VLAN. Instead, in an IPv6 environment, a system MAC-dependent link local address was used as a querier address.

Starting with FastIron release 08.0.50, you can configure a Layer 2 mode querier IP address. You can now plan an elected querier location suitable for your network and use the most suitable querier location. This address can be configured regardless of whether the current multicast snooping mode is set to active or passive. Once the mode changes to active, the configured IP address is used as a querier address. You can configure a different querier IP address for every VLAN.

1. Enter global configuration mode.

   ```
   device# configure terminal
   ```

2. Enter VLAN configuration mode.

   ```
   device(config)# vlan 100
   ```

3. Enter the **multicast6 querier-address** command followed by the IPv6 address.

The following example configures an IPv6 address as the multicast querier address for the VLAN.

```
device# configure terminal
device(config)# vlan 100
device(config-vlan-100)# multicast6 querier-address FE80::44
```

Configuring static router ports

All multicast control and data packets are forwarded to router ports that receive queries. Although router ports are learned, you can configure static router ports to force multicast traffic to specific ports, even though these ports never receive queries. To configure static router ports, enter commands such as the following:

```
Device(config)#vlan 70
Device(config-vlan-70)#multicast6 router-port ethernet 1/1/4 to 1/1/5 ethernet 1/1/8
```

Syntax: [no] multicast6 router-port ethernet *unit/slot/port*

Disabling static group proxy

A device with statically configured groups acts as a proxy and sends membership reports for its static groups when it receives general or group-specific queries. When a static group configuration is removed, the group is immediately deleted from the active group table. However, the device does not send leave messages to the querier. The querier should age out the group. The proxy activity can be disabled (the default is enabled).

```
device(config)#vlan 20
device(config-vlan-20)#multicast6 proxy-off
```

Syntax: [no] multicast6 proxy-off

By default, MLD snooping proxy is enabled.

Enabling MLDv2 membership tracking and fast leave for the VLAN

MLDv2 provides membership tracking and fast leave services to clients. In MLDv1, only one client per interface must respond to a router queries; leaving some clients invisible to the router, which makes it impossible for the device to track the membership of all clients in a group. In addition, when a client leaves the group, the device sends group-specific queries to the interface to see if other clients on that interface need the data stream of the client who is leaving. If no client responds, the device waits a few seconds before stopping the traffic. You can configure the wait time with the **ipv6 multicast6 leave-wait-time** command. See Enabling or disabling PIM6 SM snooping for more information.

MLDv2 requires that every client respond to queries, allowing the device to track every client. When the tracking feature is enabled, the device immediately stops forwarding traffic to the interface if an MLDv2 client sends a leave message, and there is no other client. This feature requires the entire VLAN to be configured for MLDv2 and have no MLDv1 clients. If a client does not send a report during the specified group membership time (the default is 140 seconds), that client is removed from the tracking list.

Every group on a physical port keeps its own tracking record. However, it can track group membership only; it cannot track by (source, group). For example, Client A and Client B belong to group1 but each is receiving traffic from different sources. Client A receives a traffic stream from (source_1, group1) and Client B receives a traffic stream from (source_2, group1). The device waits for the configured *leave-wait-time* before it stops the traffic because the two clients are in the same group. If the clients are in different groups, the waiting period is ignored and traffic is stopped immediately.

To enable tracking and fast leave for VLAN 20, enter the following commands.

```
device(config)#vlan 20
device(config-vlan-20)#multicast6 tracking
```

Syntax: [no] multicast6 tracking

The membership tracking and fast leave features are supported for MLDv2 only. If a port or client is not configured for MLDv2, the **multicast6 tracking** command is ignored.

Configuring fast leave for MLDv1

When a device receives an MLDv1 leave message, it sends out multiple group-specific queries. If no other client replies within the waiting period, the device stops forwarding traffic to this port. Configuring fast-leave-v1 allows the device to stop forwarding traffic to a port immediately upon receiving a leave message. The device does not send group-specific queries. When fast-leave-v1 is configured on a VLAN, make sure you do not have multiple clients on any port that is part of the VLAN. In a scenario where two devices connect, the querier device should not be configured for fast-leave-v1, because the port might have multiple clients through the non-querier. The number of queries and the waiting period (in seconds) can be configured using the **ipv6 multicast leave-wait-time** command. See Enabling or disabling PIM6 SM snooping for more information.

To configure fast leave for MLDv1, use commands such as the following.

```
device(config)#vlan 20
device(config-vlan-20)#multicast6 fast-leave-v1
```

Syntax: [no] multicast6 fast-leave-v1

Enabling fast convergence

In addition to periodically sending general queries, an active (querier) device sends out general queries when it detects a new port. However, since it does not recognize the other device port-up event, the multicast traffic might still use the query-interval time to resume after a topology change. Configuring fast-convergence allows the device to listen to topology change events in Layer 2 protocols, such as spanning tree, and send general queries to shorten the convergence time.

If the Layer 2 protocol is unable to detect a topology change, the fast-convergence feature may not work. For example, if the direct connection between two devices switches from one interface to another, the rapid spanning tree protocol (802.1w) considers this an optimization action, rather than a topology change. In this case, other devices will not receive topology change notifications and will be unable to send queries to speed up the convergence. The original spanning tree protocol does not recognize optimization actions, and fast-convergence works in all cases.

To enable fast-convergence, enter commands such as the following.

```
device(config)#vlan 70
device(config-vlan-70)#multicast6 fast-convergence
```

Syntax: [no] multicast6 fast-convergence

Displaying MLD snooping information

You can display the following MLD snooping information:

- MLD snooping error information
- Group and forwarding information for VLANs
- Information about MLD snooping mcache
- MLD memory pool usage
- Status of MLD traffic
- MLD information by VLAN

Displaying MLD snooping error information

To display information about possible MLD errors, enter the following command.

```
device#show ipv6 multicast error
snoop SW processed pkt: 173, up-time 160 sec
```

Syntax: show ipv6 multicast error

The following table describes the output from the **show ipv6 multicast error** command.

Field	Description
SW processed pkt	The number of IPv6 multicast packets processed by MLD snooping.
up-time	The MLD snooping up time.

Displaying MLD group information

To display default, maximum, current, and configured values for system maximum parameters, use the **show default values** command. The following output example does not show complete output; it shows only MLD group values.

```
Device(config)#show default values
System Parameters     Default    Maximum    Current    Configured
MLD-snoop-group-addr  4096       8192       5000       5000
```

To display MLD group information, enter the **show ipv6 multicast group** command.

```
Device#show ipv6 multicast group
p-:physical, ST:static, QR:querier, EX:exclude, IN:include, Y:yes, N:no
VL1 : 263 grp, 263 grp-port, tracking_enabled
      group                                  p-port ST QR life mode source
1     ff0e::ef00:a0e3                        1/1/7  N  Y  120  EX   0
2     ff01::1:f123:f567                      1/1/9  N  Y       IN   1
```

NOTE
In this example, an MLDv1 group is in EXCLUDE mode with a source of 0. The group excludes traffic from the 0 (zero) source list, which actually means that all traffic sources are included.

To display detailed MLD group information, enter the following command.

```
Device#show ipv6 multicast group ff0e::ef00:a096 detail
Display group ff0e::ef00:a096 in all interfaces in details.
p-:physical, ST:static, QR:querier, EX:exclude, IN:include, Y:yes, N:no
VL1 : 1 grp, 1 grp-port, tracking_enabled
      group                                  p-port ST QR life mode source
1     ff0e::ef00:a096                        1/1/7  N  Y  100  EX   0
    group: ff0e::ef00:a096, EX, permit 0 (source, life):
      life=100, deny 0:
```

If tracking and fast leave are enabled, you can display the list of clients for a particular group by entering the following command.

```
Device#show ipv6 multicast group ff0e::ef00:a096 tracking
Display group ff0e::ef00:a096 in all interfaces with tracking enabled.
p-:physical, ST:static, QR:querier, EX:exclude, IN:include, Y:yes, N:no
VL1 : 1 grp, 1 grp-port, tracking_enabled
      group                                  p-port ST QR life mode source
1     ff0e::ef00:a096                        1/1/7  N  Y  80   EX   0
    receive reports from 1 clients: (age)
      (2001:DB8::1011:1213:1415 60)
```

Syntax: show ipv6 multicast group [*group-address* [**detail**] [**tracking**]]

To receive a report for a specific multicast group, enter that group address for *group-address*.

Enter the **detail** keyword to display the source list of a specific VLAN.

Enter the **tracking** keyword for information on interfaces that are tracking-enabled.

The following table describes the information displayed by the **show ipv6 multicast group** command.

Field	Description
group	The address of the IPv6 group (destination IPv6 address).
p-port	The physical port on which the group membership was received.
ST	**Yes** indicates that the MLD group was configured as a static group; **No** means it was learned from reports.
QR	**Yes** means the port is a querier port; **No** means it is not. A port becomes a non-querier port when it receives a query from a source with a lower source IP address than the port.

Field	Description
life	The number of seconds the group can remain in EXCLUDE mode. An EXCLUDE mode changes to INCLUDE if it does not receive an IS_EX or TO_EX message during a specified period of time. The default is 140 seconds. There is no `life` displayed in INCLUDE mode.
mode	The current mode of the interface: INCLUDE or EXCLUDE. If the interface is in INCLUDE mode, it admits traffic only from the source list. If the interface is in EXCLUDE mode, it denies traffic from the source list and accepts the rest.
source	Identifies the source list that will be included or excluded on the interface. An MLDv1 group is in EXCLUDE mode with a source of 0. The group excludes traffic from 0 (zero) source list, which actually means that all traffic sources are included.
group	If you requested a *detailed* report, the following information is displayed: • The multicast group address • The mode of the group • Sources from which traffic will be admitted (INCLUDE) or denied (EXCLUDE) on the interface. • The life of each source list. If you requested a *tracking/fast leave* report, the clients from which reports were received are identified.

Displaying MLD snooping mcache information

To display default, maximum, current, and configured values for system maximum parameters, use the **show default values** command. The following output example does not show complete output; it shows only MLD mcache values.

```
device(config)#show default values
System Parameters      Default    Maximum    Current    Configured
mld-snoop-mcache       512        8192       512        512
```

The MLD snooping mcache contains multicast forwarding information for VLANs. To display information in the multicast forwarding mcache, enter the **show ipv6 multicast mcache** command.

```
device#show ipv6 multicast mcache
Example: (S G) cnt=: (S G) are the lowest 32 bits, cnt: SW proc. count
    OIF: 1/1/22 TR(1/1/32,1/1/33), TR is trunk, 1/1/32 primary, 1/1/33 output
vlan 1, has 2 cache
1    (abcd:ef50 0:100), cnt=121
     OIF: 1/1/11 1/1/9
     age=0s up-time=120s vidx=4130 (ref-cnt=1)
2    (abcd:ef50 0:101), cnt=0
     OIF: entire vlan
     age=0s up-time=0s vidx=8191 (ref-cnt=1)
vlan 70, has 0 cache
```

Syntax: show ipv6 multicast mcache

The following table describes the output from the **show ipv6 multicast mcache** command. Displaying software resource usage for VLANs

Field	Description
(abcd:ef50 0:100):	The lowest 32 bits of source and group. It is displayed in XXXX:XXXX hex format. Here XXXX is a 16-bit hex number.

Field	Description
cnt	The number of packets processed in software.
OIF	Output interfaces.
age	The mcache age in seconds. The mcache is reset to 0 if traffic continues to arrive, otherwise it is aged out when it reaches the time defined by **ipv6 multicast mcache-age**.
uptime	The up time of this mcache in seconds.
vidx	The vidx is shared among mcaches using the same output interfaces. The vidx specifies the output port list, which shows the index. Valid range is from 4096 to 8191.
ref-cnt	The number of mcaches using this vidx.

To display information about the software resources used, enter the following command.

```
device#show ipv6 multicast resource
                    alloc in-use  avail get-fail    limit  get-mem  size init
mld group             512      9    503        0    32000      272    28  256
mld phy port         1024     16   1008        0   200000      279    21 1024
snoop group hash      512      9    503        0    59392      272    20  256
.... Entries deleted
total pool memory 194432 bytes
has total 1 forwarding hash
Available vidx: 4061
```

Syntax: show ipv6 multicast resource

The following table describes the output from the **show ipv6 multicast resource** command.

Field	Displays
alloc	The allocated number of units.
in-use	The number of units which are currently used.
avail	The number of available units.
get-fail	The number of resource failures **NOTE** It is important to pay close attention to this field.
limit	The upper limit of this expandable field. The MLD group limit is configured using the **system-max mld-snoop-group-addr** command. The snoop mcache entry limit is configured using the **system-max mld-snoop-mcache** command.
get-mem	The current memory allocation. This number should continue to increase.
size	The size of a unit (in bytes).
init	The initial allocated amount of memory. **NOTE** This number can be increased. (More memory can be allocated if necessary.)
Available vidx	The output interface (OIF) port mask used by mcache. The entire device has a maximum of 4096 vidx. Different mcaches with the same OIF share the same vidx. If vidx is not available, the stream cannot be hardware-switched.

Displaying status of MLD snooping traffic

To display status information for MLD snooping traffic, enter the **show ipv6 multicast traffic** command.

```
device#show ipv6 multicast traffic
MLD snooping: Total Recv: 32208, Xmit: 166
Q: query, Qry: general Q,  G-Qry: group Q,  GSQry: group-source Q, Mbr: member
Recv       QryV1      QryV2      G-Qry      GSQry      MbrV1      MbrV2      Leave
VL1            0          0          0          0      31744        208        256
VL70           0          0          0          0          0          0          0
Recv        IsIN       IsEX       ToIN       ToEX      ALLOW      BLOCK   Pkt-Err
VL1         1473      31784          0          1          1          7          0
VL70           0          0          0          0          0          0          0
Send       QryV1      QryV2      G-Qry      GSQry      MbrV1      MbrV2
VL1            0          0        166          0          0          0
VL70           0          0          0          0          0          0
```

Syntax: show ipv6 multicast traffic

The following table describes the information displayed by the **show ipv6 multicast traffic** command.

Field	Description
Q	Query
Qry	General Query
QryV1	Number of general MLDv1 queries received or sent.
QryV2	Number of general MLDv2 snooping queries received or sent.
G-Qry	Number of group specific queries received or sent.
GSQry	Number of group source specific queries received or sent.
MBR	The membership report.
MbrV1	The MLDv1 membership report.
MbrV2	The MLDv2 membership report.
IsIN	Number of source addresses that were included in the traffic.
IsEX	Number of source addresses that were excluded in the traffic.
ToIN	Number of times the interface mode changed from EXCLUDE to INCLUDE.
ToEX	Number of times the interface mode changed from INCLUDE to EXCLUDE.
ALLO	Number of times additional source addresses were allowed on the interface.
BLK	Number of times sources were removed from an interface.
Pkt-Err	Number of packets having errors such as checksum errors.

Displaying MLD snooping information by VLAN

You can display MLD snooping information for all VLANs or for a specific VLAN. For example, to display MLD snooping information for VLAN 70, enter the **show ipv6 multicast vlan** command.

```
device#show ipv6 multicast vlan 70
version=1, query-t=60, group-aging-t=140, max-resp-t=3, other-qr-present-t=123
VL70: cfg V2, vlan cfg passive, 2 grp, 0 (SG) cache, rtr ports,
    router ports: 1/1/36(120) 2001:DB8::2e0:52ff:fe00:9900,
  1/1/26 has 2 grp, non-QR (passive), cfg V1
  1/1/26 has 2 grp, non-QR (passive), cfg V1
    group: ff10:1234::5679, life = 100
    group: ff10:1234::5678, life = 100
  1/1/35 has 0 grp, non-QR (QR=2001:DB8::2e0:52ff:fe00:9900, age=20), dft V2 trunk
```

Syntax: show ipv6 multicast vlan [*vlan-id*]

If you do not specify the *vlan-id* variable, information for all VLANs is displayed.

The following table describes information displayed by the **show ipv6 multicast vlan** command.

Field	Description
version	The MLD version number.
query-t	How often a querier sends a general query on the interface.
group-aging-t	Number of seconds membership groups can be members of this group before aging out.
rtr-port	The router ports which are the ports receiving queries. The display `router ports: 1/1/36(120)` 2001:DB8::`2e0:52ff:fe00:9900` means port 1/1/36 has a querier with 2001:DB8::2e0:52ff:fe00:9900 as the link-local address, and the remaining life is 120 seconds.
max-resp-t	The maximum number of seconds a client can wait before it replies to the query.
non-QR	Indicates that the port is a non-querier.
QR	Indicates that the port is a querier.

Clearing MLD counters on all VLANs

The clear commands for MLD snooping should only be used in troubleshooting situations or when recovering from error conditions.

To clear MLD snooping error and traffic counters on all VLANs, enter the **clear ipv6 multicast counters** command.

```
device#clear ipv6 multicast counters
```

Syntax: clear ipv6 multicast counters

Clearing the mcache on all VLANs

To clear the mcache on all VLANs, enter the **clear ipv6 multicast mcache** command.

```
device#clear ipv6 multicast mcache
```

Syntax: clear ipv6 multicast mcache

Clearing the mcache on a specific VLAN

To clear the mcache on a specific VLAN, enter the **clear ipv6 multicast vlan mcache** command.

```
device#clear ipv6 multicast vlan 10 mcache
```

Syntax: clear ipv6 multicast vlan *vlan-id* **mcache**

The *vlan-id* parameter specifies the specific VLAN from which to clear the cache.

Clearing traffic counters on a specific VLAN

To clear the traffic counters on a specific VLAN, enter the **clear ipv6 multicast vlan traffic** command.

```
device#clear ipv6 multicast vlan 10 traffic
```

Syntax: clear ipv6 multicast vlan *vlan-id* **traffic**

The *vlan-id* parameter specifies the specific VLAN from which to clear the traffic counters.

Disabling the flooding of unregistered IPv6 multicast frames in an MLD-snooping-enabled VLAN

NOTE
Disabling the flooding of unregistered IPv6 multicast frames in an MLD-snooping-enabled VLAN is supported only on the Ruckus ICX 7750 (standalone and stacking) platform.
Support for this feature on the Ruckus ICX 7750 was introduced in FastIron 8.0.10d. In releases prior to FastIron 8.0.30, support for this feature on the Ruckus ICX 7750 was for devices in standalone mode only.

To disable the flooding of unregistered IPv6 multicast frames in an MLD-snooping-enabled VLAN, use the **ipv6 multicast disable-flooding** command in global configuration mode.

The following example disables flooding of unregistered IPv6 multicast frames.

```
Device(config)# ipv6 multicast disable-flooding
```

PIM6 SM traffic snooping overview

When multiple PIM sparse routers connect through a snooping-enabled device, the Ruckus device always forwards multicast traffic to these routers. For example, PIM sparse routers R1, R2, and R3 connect through a device. Assume R2 needs traffic, and R1 sends it to the device, which forwards it to both R2 and R3, even though R3 does not need it. A PIM6 SM snooping-enabled device listens to join and prune messages exchanged by PIM sparse routers, and stops traffic to the router that sends prune messages. This allows the device to forward the data stream to R2 only.

PIM6 SM traffic snooping requires MLD snooping to be enabled on the device. MLD snooping configures the device to listen for MLD messages. PIM6 SM traffic snooping provides a finer level of multicast traffic control by configuring the device to listen specifically for PIM6 SM join and prune messages sent from one PIM6 SM router to another through the device.

Application examples of PIM6 SM traffic snooping

Figure 2 shows an example application of the PIM6 SM traffic snooping feature. In this example, a device is connected through an IP router to a PIM6 SM group source that is sending traffic for two PIM6 SM groups. The device also is connected to a receiver for each of the groups.

When PIM6 SM traffic snooping is enabled, the device starts listening for PIM6 SM join and prune messages and MLD group membership reports. Until the device receives a PIM6 SM join message or an MLD group membership report, the device

forwards IP multicast traffic out all ports. Once the device receives a join message or group membership report for a group, the device forwards subsequent traffic for that group only on the ports from which the join messages or MLD reports were received.

In this example, the router connected to the receiver for group ff1e::1:2 sends a join message toward the group source. Because PIM6 SM traffic snooping is enabled on the device, the device examines the join message to learn the group ID, then makes a forwarding entry for the group ID and the port connected to the receiver router. The next time the device receives traffic for ff1e::1:2 from the group source, the device forwards the traffic only on port 1/5/1, because that is the only port connected to a receiver for the group.

Notice that the receiver for group ff1e::3:4 is directly connected to the device. As a result, the device does not see a join message on behalf of the client. However, because MLD snooping also is enabled, the device uses the MLD group membership report from the client to select the port for forwarding traffic to group ff1e::3:4 receivers.

The MLD snooping feature and the PIM6 SM traffic snooping feature together build a list of groups and forwarding ports for the VLAN. The list includes PIM6 SM groups learned through join messages as well as MAC addresses learned through MLD group membership reports. In this case, even though the device never sees a join message for the receiver for group ff1e::3:4, the device nonetheless learns about the receiver and forwards group traffic to the receiver.

The device stops forwarding IP multicast traffic on a port for a group if the port receives a prune message for the group.

Notice that the ports connected to the source and the receivers are all in the same port-based VLAN on the device. This is required for the PIM6 SM snooping feature. The devices on the edge of the Global Ethernet cloud are configured for MLD snooping and PIM6 SM traffic snooping. Although this application uses multiple devices, the feature has the same requirements and works the same way as it does on a single device.

The following figure shows another example application for PIM6 SM traffic snooping. This example shows devices on the edge of a Global Ethernet cloud (a Layer 2 Packet over SONET cloud). Assume that each device is attached to numerous other devices such as other Layer 2 Switches and Layer 3 Switches (routers).

NOTE
This example assumes that the devices are actually Ruckus devices running Layer 2 Switch software.

FIGURE 2 PIM6 SM traffic reduction in Global Ethernet environment

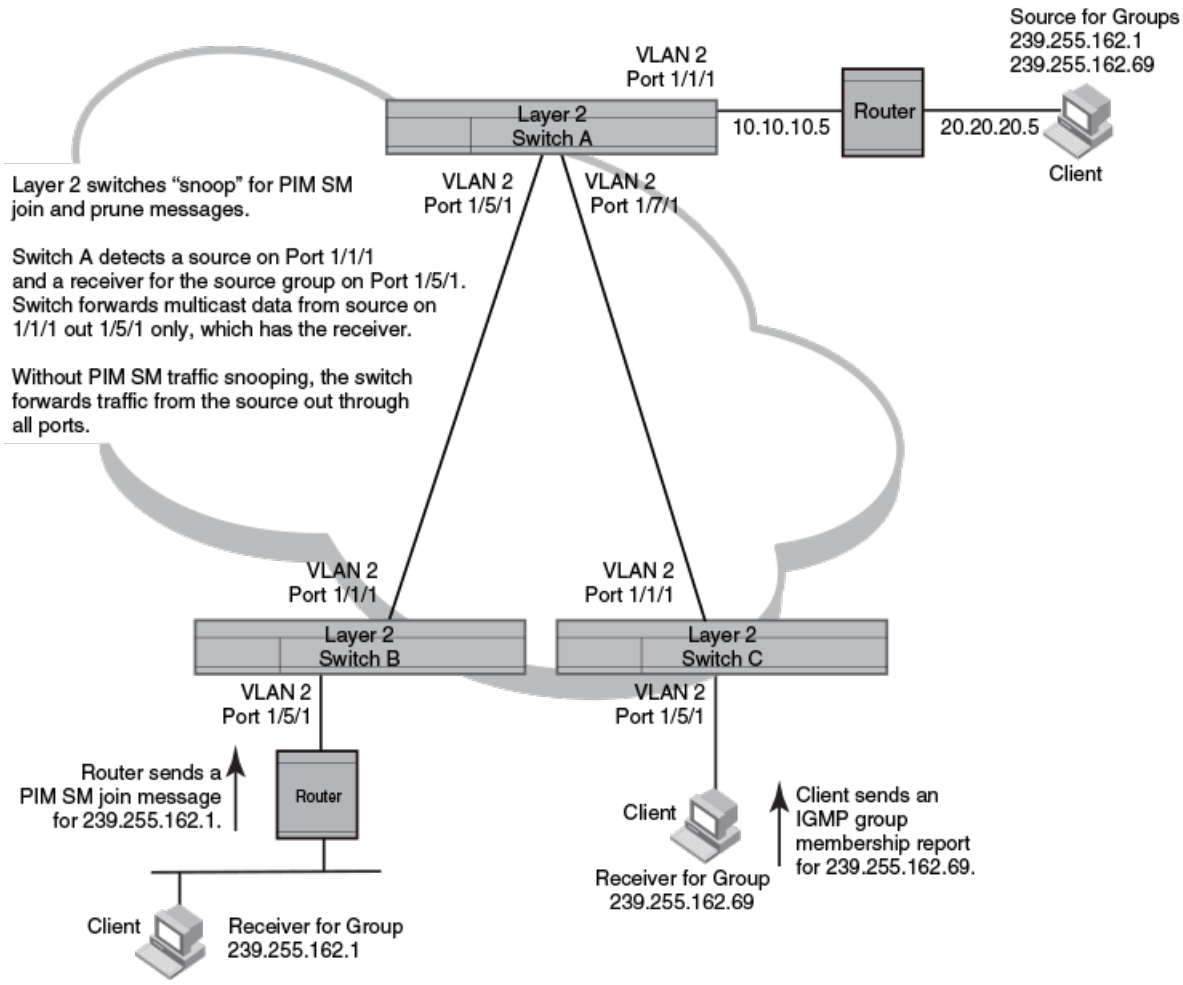

The devices on the edge of the Global Ethernet cloud are configured for MLD snooping and PIM6 SM traffic snooping. Although this application uses multiple devices, the feature has the same requirements and works the same way as it does on a single device.

Configuration notes and limitations for PIM6 SM snooping

- PIM6 SM snooping applies only to PIM6 SM version 2 (PIM6 SM V2).
- PIM6 SM traffic snooping is supported in the Layer 2, base Layer 3, and full Layer 3 code.
- MLD snooping must be enabled on the device that will be running PIM6 SM snooping. The PIM6 SM traffic snooping feature requires MLD snooping.

  NOTE
  Use the passive mode of MLD snooping instead of the active mode. The passive mode assumes that a router is sending group membership queries as well as join and prune messages on behalf of receivers. The active mode configures the device to send group membership queries.

- All the device ports connected to the source and receivers or routers must be in the same port-based VLAN.

- The PIM6 SM snooping feature assumes that the group source and the device are in different subnets and communicate through a router. The source must be in a different IP subnet than the receivers. A PIM6 SM router sends PIM join and prune messages on behalf of a multicast group receiver only when the router and the source are in different subnet. When the receiver and source are in the same subnet, they do not need the router in order to find one another. They find one another directly within the subnet.

The device forwards all IP multicast traffic by default. Once you enable MLD snooping and PIM6 SM traffic snooping, the device initially blocks all PIM6 SM traffic instead of forwarding it. The device forwards PIM6 SM traffic to a receiver only when the device receives a join message from the receiver. Consequently, if the source and the downstream router are in the same subnet, and PIM6 SM traffic snooping is enabled, the device blocks the PIM6 SM traffic and never starts forwarding the traffic. This is because the device never receives a join message from the downstream router for the group. The downstream router and group find each other without a join message because they are in the same subnet.

NOTE
If the "route-only" feature is enabled on a Layer 3 Switch, PIM6 SM traffic snooping will not be supported.

PIM6 SM snooping configuration

Configuring PIM6 SM snooping on a Ruckus device consists of the following global and VLAN-specific tasks.

Perform the following global PIM6 SM snooping task:

- Enabling or disabling PIM6 SM snooping

Perform the following VLAN-specific PIM6 SM snooping tasks:

- Enabling PIM6 SM snooping on a VLAN
- Disabling PIM6 SM snooping on a VLAN

Enabling or disabling PIM6 SM snooping

Use PIM6 SM snooping only in topologies where multiple PIM sparse routers connect through a device. PIM6 SM snooping does not work on a PIM dense mode router which does not send join messages and traffic to PIM dense ports is stopped. A PIM6 SM snooping-enabled device displays a warning if it receives PIM dense join or prune messages.

Perform the following steps to enable PIM6 SM snooping globally.

1. Enable MLD snooping passive globally.

```
device(config)#ipv6 multicast passive
```

2. Enable PIM6 SM snooping globally.

```
device(config)#ipv6 pimsm-snooping
```

This command enables PIM6 SM traffic snooping. The PIM6 SM traffic snooping feature assumes that the network has routers that are running PIM6 SM.

To disable PIM6 SM snooping, enter the **no ipv6 pimsm-snooping** command.

```
device(config)#no ipv6 pimsm-snooping
```

If you also want to disable IP multicast traffic reduction, enter the **no ipv6 multicast** command.

```
device(config)#no ipv6 multicast
```

Syntax: [no] ipv6 pimsm-snooping

Enabling PIM6 SM snooping on a VLAN

Perform the following steps to enable PIM6 SM snooping on a VLAN.

1. Configure a VLAN and add the ports that are connected to the device and host in the same port-based VLAN.

```
device(config)#vlan 20
device(config-vlan-20)#untagged etherenet 1/1/5 ethernet 1/1/7 ethernet 1/1/11
```

2. Enable MLD snooping passive on the VLAN.

```
device(config-vlan-20)#multicast6 passive
```

3. Enable PIM6 SM snooping on the VLAN.

```
device(config-vlan-20)#multicast6 pimsm-snooping
```

Syntax: [no] multicast6 pimsm-snooping

Disabling PIM6 SM snooping on a VLAN

When PIM6 SM snooping is enabled globally, you can still disable it for a specific VLAN. For example, the following commands disable PIM6 SM snooping for VLAN 20. This setting overrides the global setting.

```
device(config)#vlan 20
device(config-vlan-20)#multicast6 disable-pimsm-snoop
```

Syntax: [no] multicast6 disable-pimsm-snoop

Displaying PIM6 SM snooping information

To display PIM6 SM snooping information, enter the **show ipv6 multicast pimsm-snooping** command.

```
Device#show ipv6 multicast pimsm-snooping
Example: Port: 1/7/3 (ref_count=1)
         ref_count: no of entries in pimsm snoop cache added this oif)

vlan 503, has 1 caches.
1    (* 2:3) has 1 pim join ports out of 1 OIF
     1/1/4 (ref_count=2),
```

Refer to the *FastIron Command Reference* for more information on PIM SM commands.

Displaying PIM6 SM snooping for a VLAN

You can display PIM6 SM snooping information for all groups by entering the following command at any level of the CLI on a Layer 2 switch.

```
Device#show ipv6 multicast pimsm-snooping vlan 25
vlan 25, has 2 caches.
1     (0:11 1:3) has 2 pim join ports out of 2 OIF
      1/1/2 (age=30), 2/1/3 (age=30),
      1/1/2 has 1 src: 15::11(30),
      2/1/3 has 1 src: 15::11(30),
2     (0:16 1:3) has 2 pim join ports out of 2 OIF
      2/1/3 (age=90), 1/1/2 (age=10),
      1/1/2 has 1 src: 15::16(10),
```

Syntax: show ipv6 multicast pimsm-snooping vlan *vlan-id*

Enter the ID of the VLAN for the *vlan-id* parameter.

The following table describes the information displayed by the **show ipv6 multicast pimsm-snooping** command.

Field	Description
VLAN ID	The port-based VLAN to which the following information applies and the number of members in the VLAN.
PIM6 SM Neighbor list	The PIM6 SM routers that are attached to the Layer 2 Switch ports. The value following "expires" indicates how many seconds the Layer 2 Switch will wait for a hello message from the neighbor before determining that the neighbor is no longer present and removing the neighbor from the list.
Multicast Group	The IP address of the multicast group. **NOTE** The fid and camindex values are used by Ruckus Technical Support for troubleshooting.
Forwarding Port	The ports attached to the group receivers. A port is listed here when it receives a join message for the group, an MLD membership report for the group, or both.
PIMv2 Group Port	The ports on which the Layer 2 Switch has received PIM6 SM join messages for the group.
Source, Port list	The IP address of each PIM6 SM source and the Layer 2 Switch ports connected to the receivers of the source.

Refer to the *FastIron Command Reference* for more information on PIM SM commands.

IPv4 Multicast Protocols

- Overview of IP multicasting....67
- Support for Multicast Multi-VRF....68
- Changing global IP multicast parameters....69
- Adding an interface to a multicast group....72
- Multicast non-stop routing....72
- Passive multicast route insertion....74
- IP multicast boundaries....75
- PIM Dense....77
- PIM convergence on MAC movement....89
- PIM Sparse....89
- IP multicast PIM neighbor filter....96
- PIM Passive....98
- Multicast Outgoing Interface (OIF) list optimization....98
- Displaying system values....99
- Displaying PIM resources....99
- Displaying PIM Sparse configuration information and statistics....100
- Clearing the PIM forwarding cache....112
- Displaying PIM traffic statistics....112
- Clearing the PIM message counters....114
- Displaying PIM RPF....114
- Configuring Multicast Source Discovery Protocol....114
- Configuring MSDP mesh groups....128
- MSDP Anycast RP....130
- PIM Anycast RP....134
- Static multicast routes....136
- IGMP Proxy....136
- IGMP V3....139

Overview of IP multicasting

Multicast protocols allow a group or channel to be accessed over different networks by multiple stations (clients) for the receipt and transmission of multicast data.

Distribution of stock quotes, video transmissions such as news services and remote classrooms, and video conferencing are all examples of applications that use multicast routing.

Ruckus devices support the Protocol-Independent Multicast (PIM) protocol, along with the Internet Group Membership Protocol (IGMP).

PIM is a broadcast and pruning multicast protocol that delivers IP multicast datagrams. This protocol employs reverse path lookup check and pruning to allow source-specific multicast delivery trees to reach all group members. PIM builds a different multicast tree for each source and destination host group.

Multicast terms

The following terms are commonly used in discussing multicast-capable devices. These terms are used throughout this chapter:

Node: A device.

Root Node: The node that initiates the tree building process. It is also the device that sends the multicast packets down the multicast delivery tree.

Upstream: The direction from which a device receives multicast data packets. An upstream device is a node that sends multicast packets.

Downstream: The direction to which a device forwards multicast data packets. A **downstream** device is a node that receives multicast packets from upstream transmissions.

Group Presence: A multicast group has been learned from one of the directly connected interfaces. Members of the multicast group are present on the device.

Intermediate nodes: Devices that are in the path between source devices and leaf devices.

Leaf nodes: Devices that do not have any downstream devices.

Multicast Tree: A unique tree is built for each source group (S,G) pair. A multicast tree is comprised of a root node and one or more nodes that are leaf or intermediate nodes.

Support for Multicast Multi-VRF

Multicast Multi-VRF support for the Ruckus device includes the following:

- PIM (PIM-SM and PIM-DM) The procedure for configuring PIM within a VRF instance is described in the “Enabling PIM on the device and an interface” and the “Configuring global PIM Sparse parameters” sections.

changes to system-max command

Several changes have been made to the **system-max** commands in support of Multicast Multi-VRF.

The **system-max pim-mcache** command has been deprecated and replaced by the **system max pim-hw-mcache** command.

The following new runtime commands have been introduced:

max-mcache This command is described in the “Defining the maximum number of PIM cache entries” section.

ip igmp max-group-address This command, which is described in the “Defining the maximum number of IGMP group ” section, addresses replaces the **system-max igmp-max-group-address** command.

Show and clear command support

The following show and clear commands support Multicast Multi-VRF:

- clear ip igmp [vrf vrf-name] cache
- clear ip igmp [vrf vrf-name] traffic
- show ip igmp [vrf vrf-name] group [group-address [detail] [tracking]]
- show ip igmp [vrf vrf-name] interface [ve number | ethernet unit/slot/port | tunnel num]
- show ip igmp [vrf vrf-name] settings
- show ip igmp [vrf vrf-name] traffic

Changing global IP multicast parameters

The following sections apply to PIM-DM, PIM-SM, and IGMP.

Concurrent support for multicast routing and snooping

Multicast routing and multicast snooping instances work concurrently on the same device. For example, you can configure PIM routing on certain VEs interfaces and snooping on other VEs or VLANs. The limitation is that either multicast snooping or routing can be enabled on a VE interface or VLAN, but not on both. This is because all of the multicast data and control packets (IGMP, PIM) received on the snooping VLAN are handled by multicast snooping and do not reach the multicast routing component. Similarly, any multicast data or control packets received on a VE interface enabled with PIM routing are handled by the PIM routing component and are not seen by the IGMP or PIM snooping component.

The following considerations apply when configuring concurrent operation of Multicast Routing and Snooping.

1. Either multicast snooping or routing can be enabled on a VE or VLAN but not both.
2. Snooping can be enabled globally by configuring the **ip multicast** *active* | *passive* command.
3. The global snooping configuration is inherited by all current VLANs that are not enabled for multicast routing.
4. The global snooping configuration is also inherited by all new VLANs. Enabling multicast routing on a newly created VLAN or VE automatically disables snooping on the VLAN or VE.
5. When a VLAN-level snooping is configured, it is displayed.

Defining the maximum number of PIM cache entries

You can use the following run-time command to define the maximum number of repeated PIM traffic being sent from the same source address and being received by the same destination address. To define this maximum for the default VRF, enter the following commands.

```
device(config)# router pim
device(config-pim-router)# max-mcache 999
```

Syntax: [no] max-cache *num*

The *num* variable specifies the maximum number of multicast cache entries for PIM in the default VRF. If not defined by this command, the maximum value is determined by the **system-max pim-hw-mcache** command or by available system resources.

To define the maximum number of PIM Cache entries for a specified VRF, use the following command.

```
device(config)# router pim vrf vpn1
device(config-pim-router-vrf-vpn1)# max-mcache 999
```

Syntax: [no] router pim [**vrf** *vrf-name*]

The **vrf** parameter specified with the **router pim** command allows you to configure the **max-mcache** command for a virtual routing and forwarding (VRF) instance specified by the *vrf-name* variable.

The *num* variable specifies the maximum number of multicast cache entries for PIM in the specified VRF. If not defined by this command, the maximum value is determined by the **system-max** command option **pim-hw-mcache** or by available system resources.

Setting the Maximum Number of IGMP Group Addresses

You can change the maximum number of IGMP group addresses for the default virtual routing and forwarding (VRF) instance or a specific VRF.

To set the maximum number of IGMP group addresses for the default VRF, enter the **ip igmp max-group-address** command in global configuration mode with a value between 1 through 8192. The default is 4096.

Use the steps below to set the maximum number of IGMP addresses for a specific VRF.

1. Enter global configuration mode.

```
device# configure terminal
```

2. Specify the VRF.

```
device(config)# vrf vpn1
```

3. Enter IPv4 address family mode.

```
device(config-vrf-vpn1)# address-family ipv4
```

4. To set the maximum number of IGMP group addresses, use the **ip igmp max-group-address** command.

```
device(config-vrf-vpn1-ipv4)# ip igmp max-group-address 1000
```

The following example sets the maximum number of IGMP group addresses for VRF VPN1 to 1000.

```
device# configure terminal
device(config)# vrf vpn1
device(config-vrf-vpn1)# address-family ipv4
device(config-vrf-vpn1-ipv4)# ip igmp max-group-address 1000
```

Changing IGMP V1 and V2 parameters

IGMP allows Ruckus devices to limit the multicast of IGMP packets to only those ports on the device that are identified as IP Multicast members.

The device actively sends out host queries to identify IP Multicast groups on the network, inserts the group information in an IGMP packet, and forwards the packet to IP Multicast neighbors.

The following IGMP V1 and V2 parameters apply to PIM:

- IGMP query interval - Specifies how often the Ruckus device queries an interface for group membership. Possible values are 2 - 3600. The default is 125.
- IGMP group membership time - Specifies how many seconds an IP Multicast group can remain on a Ruckus device interface in the absence of a group report. Possible values are 5 - 26000. The default is 260.
- IGMP maximum response time - Specifies how many seconds the Ruckus device will wait for an IGMP response from an interface before concluding that the group member on that interface is down and removing the interface from the group. Possible values are 1 - 25. The default is 10.

Modifying IGMP (V1 and V2) query interval period

The IGMP query interval period defines how often a device will query an interface for group membership. Possible values are 2 to 3600 seconds and the default value is 125 seconds.

To modify the default value for the IGMP (V1 and V2) query interval, enter the following:

```
Device(config)# ip igmp query-interval 120
```

Syntax: [no] ip igmp query-interval *num*

The *num* variable specifies the number of seconds and can be a value from 2 to 3600.

The default value is 125.

Modifying IGMP (V1 and V2) membership time

Group membership time defines how long a group will remain active on an interface in the absence of a group report. Possible values are from 5 to 26000 seconds and the default value is 260 seconds.

To define an IGMP (V1 and V2) membership time of 240 seconds, enter the following.

```
device(config)# ip igmp group-membership-time 240
```

Syntax: [no] ip igmp group-membership-time *num*

The *num* variable specifies the number of seconds and can be a value from 5 to 26000.

The default value is 260.

Modifying IGMP (V1 and V2) maximum response time

Maximum response time defines how long the Ruckus device will wait for an IGMP (V1 and V2) response from an interface before concluding that the group member on that interface is down and removing the interface from the group. Possible values are 1 to 25. The default is 10.

To change the IGMP (V1 and V2) maximum response time, enter a command such as the following at the global CONFIG level of the CLI.

```
Device(config)# ip igmp max-response-time 8
```

Syntax:[no] ip igmp max-response-time *num*

The *num* variable specifies the number of seconds and can be a value from 1 to 25. The default is 10.

Security enhancement for IGMP

A security enhancement was made to IGMPv2 to comply with the following recommendation of RFC 2236: “Ignore the Report if you cannot identify the source address of the packet as belonging to a subnet assigned to the interface on which the packet was received.”

NOTE
When used in applications such as IP-TV (or any multicast application in general), the administrator should ensure that the set-top box (or multicast client) is configured on the same subnet as the v.e. configured on the device. This is typically the case but is emphasized here to ensure correct operation. Without this configuration, IGMP messages received by the device are ignored, which causes an interruption in any multicast traffic directed towards the set-top box (multicast client).

Adding an interface to a multicast group

You can manually add an interface to a multicast group. This is useful in the following cases:

- Hosts attached to the interface are unable to add themselves as members of the group using IGMP.
- There are no members for the group attached to the interface.

When you manually add an interface to a multicast group, the device forwards multicast packets for the group but does not itself accept packets for the group.

You can manually add a multicast group to individual ports only. If the port is a member of a virtual routing and forwarding (VRF) interface, you must add the ports to the group individually.

To manually add a port to a multicast group, enter a command such as the following at the configuration level for the port.

```
Device(config-if-e10000-1/1/1)# ip igmp static-group 224.2.2.2
```

This command adds port 1/1 to multicast group 224.2.2.2.

To add a port that is a member of a VRF interface to a multicast group, enter a command such as the following at the configuration level for the virtual routing interface.

```
Device(config-vif-1)# ip igmp static-group 224.2.2.2 ethernet 1/4/2
```

This command adds port 1/4/2 in VRF interface 1 to multicast group 224.2.2.2.

Syntax: [no] ip igmp static-group *ip-addr* [**ethernet** *unit/slot//port*]

The *ip-addr* variable specifies the group number.

The **ethernet** *unit/slot/port* parameter specifies the port number. Use this parameter if the port is a member of a VRF interface, and you are entering this command at the configuration level for the VRF interface.

Manually added groups are included in the group information displayed by the following commands:

- **show ip igmp group**
- **show ip pim group**

To display static multicast groups in the default VRF, enter the following command.

```
device# show ip igmp static
Group Address  Interface Port List
---------------------------------
    224.2.2.2  v1 ethe 1/4/2
```

Syntax: show ip igmp [**vrf** *vrf_name*] **static**

The **vrf** parameter allows you to display static IGMP groups for the VRF instance specified by the *vrf_name* variable.

Multicast non-stop routing

Multicast non-stop routing (NSR) provides hitless-failover support on all platforms for IPv4 multicast features (default and non-default VRFs): PIM-DM, PIM-SM, and PIM-SSM.

If multicast NSR is enabled, the software state is kept in sync between the active and standby modules. The standby module is NSR ready when the software state of the standby and active modules are in sync. When the standby module is NSR ready, a hitless-failover does not result in a disruption to the multicast forwarding state or traffic

If Multicast NSR is not enabled, or if the standby module is not NSR ready, the software state of the standby and active modules are not in sync. In this case, after a switchover or failover occurs, the new active module enters protocol learning phase for a

duration of 55 seconds. During this phase, it learns the protocol state information from its PIM neighbors and local clients. During this period, new multicast flows will not be forwarded, but the existing mutlicast flows (which existed prior to switchover or failover) are forwarded in hardware without any disruption. At the end of the period, all the existing flows are deleted from hardware and they are reprogrammed as per the newly learned state information. Multicast traffic will incur a slight disturbance until the new active module reprograms the hardware with new forwarding state information.

The following message is displayed on the console of the active and standby modules to indicate that the standby module is NSR ready:

```
Mcastv4 is NSR ready
```

Configuration considerations

- Multicast NSR is not supported for IPv6 multicast.
- When multicast NSR is turned on, unicast routing must be protected by NSR or graceful restart on all multicast VRFs.

Configuring multicast non-stop routing

To globally enable multicast non-stop routing for all VRFs, enter the **ip multicast-nonstop-routing** command on the CLI as shown in this example:

```
Device(config)#ip multicast-nonstop-routing
```

Syntax: ip multicast-nonstop-routing

During a hitless upgrade and switchover, this syslog message is generated on the CLI. The message displayed depends on which version of PIM is configured.

PIM v4 is configured

```
MCASTv4 protocol receives switchover event
Mcastv4 protocol switchover done
```

PIM v6 is configured

```
MCASTv6 protocol receives switchover event
Mcastv6 protocol switchover done
```

The syslog message shows the state transition of multicast NSR as the standby module takes over as the active module. The multicast data traffic will continue to flow during state transition.

Displaying the multicast NSR status

To display the multicast nonstop routing (NSR) status, enter the following command:

```
Device# show ip pim nsr
Global Mcast NSR Status
  NSR: ON
  Switchover In Progress Mode: FALSE
```

The following table displays the output from the **show ip pim nsr** command.

Field	Description
NSR	The NSR field indicates whether the **ip multicast-nonstop-routing** command is enabled (ON) or disabled (OFF).
Switchover in Progress Mode	The Switchover in Progress Mode field indicates whether the multicast traffic is in the middle of a switchover (displaying a TRUE status), or not (displaying a FALSE status).

Displaying counter and statistic information for multicast NSR

To display multicast NSR counter and statistic information, enter the following command.

```
device#show ip pim counter nsr
Mcache sync (entity id: 203)
  pack: 0
  unpack: 0
  ack: 0
RPset sync (entity id: 201)
  pack: 0
  unpack: 0
  ack: 0
BSR status (entity id: 202)
  pack: 1
  unpack: 0
  ack: 1
```

Syntax: show ip pim [**vrf** *vrf_name*] **counter nsr**

The **vrf** parameter allows you to display IP PIM counters for the VRF instance specified by the *vrf-name* variable.

The following table displays the output from the **show ip pim counter nsr** command.

This field...	Displays...
Mcache sync	The mcache NSR sync queue that carries the NSR sync message for mcache updates.
pack	The number of NSR sync messages that are packed from the active module to the standby module.
unpack	The number of NSR sync messages that are received and unpacked by the standby module.
ack	The number of NSR sync acknowledgements received by the active module.
RPset sync	The RPset sync queue that carries the NSR sync message for RPset update.
BSR status	The BSR status sync queue that carries the NSR sync message for BSR information update.

Passive multicast route insertion

To prevent unwanted multicast traffic from being sent to the CPU, PIM routing and passive multicast route insertion (PMRI) can be used together to ensure that multicast streams are forwarded out only ports with interested receivers and unwanted traffic is dropped in hardware on Layer 3 switches.

PMRI enables a Layer 3 switch running PIM Sparse to create an entry for a multicast route (for example, (S,G)), with no directly attached clients or when connected to another PIM device (transit network).

When a multicast stream has no output interfaces (OIF), the Layer 3 switch can drop packets in hardware if the multicast traffic meets either of the following conditions:

In PIM-SM:

- The route has no OIF *and*
- If directly connected source passed source reverse-path forwarding (RPF) check *and* completed data registration with reverse path (RP) *or*
- If non directly connected source passed source RPF check.

In PIM-DM:

- The route has no OIF *and*
- passed source RPF check *and*
- Device has no downstream PIM neighbor.

If the OIF is inserted after the hardware-drop entries are installed, the hardware entries will be updated to include the OIFs.

> **NOTE**
> Disabling hardware-drop does not immediately take away existing hardware-drop entries, they will go through the normal route aging processing when the traffic stops.

Configuring PMRI

PMRI is enabled by default. To disable PMRI, enter commands such as the following.

```
device(config)# router pim
device(config-pim-router)# hardware-drop-disable
```

Syntax: [no] hardware-drop-disable

Displaying hardware-drop

Use the **show ip pim sparse** command to display if the hardware-drop feature has been enabled or disabled.

```
device(config)#show ip pim sparse
Global PIM Sparse Mode Settings
  Maximum Mcache         : 12992       Current Count              : 0
  Hello interval         : 30          Neighbor timeout           : 105
  Join/Prune interval    : 60          Inactivity interval        : 180
  Hardware Drop Enabled  : Yes         Prune Wait Interval        : 3
  Bootstrap Msg interval : 60          Candidate-RP Msg interval  : 60
  Register Suppress Time : 60          Register Probe Time        : 10
  Register Stop Delay    : 10          Register Suppress interval : 60
  SSM Enabled            : Yes         SPT Threshold              : 1
  SSM Group Range        : 232.0.0.0/8
  Route Precedence       : mc-non-default mc-default uc-non-default uc-default
```

IP multicast boundaries

The IP multicast boundary feature is designed to selectively allow or disallow multicast flows to configured interfaces.

The **ip multicast-boundary** command allows you to configure a boundary on a PIM enabled interface by defining which multicast groups may not forward packets over a specified interface. This includes incoming and outgoing packets. By default, all interfaces that are enabled for multicast are eligible to participate in a multicast flow provided they meet the multicast routing protocol's criteria for participating in a flow.

Configuration considerations

- Only one ACL can be bound to any interface.
- Normal ACL restrictions apply as to how many software ACLs can be created, but there is no hardware restrictions on ACLs with this feature.
- Creation of a static IGMP client is allowed for a group on a port that may be prevented from participation in the group on account of an ACL bound to the port's interface. In such a situation, the ACL would prevail and the port will not be added to the relevant entries.
- Either standard or extended ACLs can be used with the multicast boundary feature. When a standard ACL is used, the address specified is treated as a group address and NOT a source address.
- When a boundary is applied to an ingress interface, all packets destined to a multicast group that is filtered out will be dropped by software. Currently, there is no support to drop such packets in hardware.
- The **ip multicast-boundary** command may not stop clients from receiving multicast traffic if the filter is applied on the egress interface up-stream from RP.

Configuring multicast boundaries

To define boundaries for PIM enabled interfaces, enter a commands such as the following.

```
device(config)# interface ve 40
device(config-vif-40)#ip multicast-boundary MyRuckusAccessList
```

Syntax: [no] ip multicast-boundary *acl-spec*

Use the *acl-spec* parameter to define the number or name identifying an access list that controls the range of group addresses affected by the boundary.

Use the **no ip multicast boundary** command to remove the boundary on a PIM enabled interface.

The ACL, MyRuckusAccessList can be configured using standard ACL syntax. Some examples of how ACLs can be used to filter multicast traffic are as follows:

Standard ACL to permit multicast traffic

To permit multicast traffic for group 225.1.0.2 and deny all other traffic, enter the following command.

```
device(config)# access-list 10 permit host 225.1.0.2
device(config)# access-list 10 deny any
```

Extended ACL to deny multicast traffic

To deny multicast data traffic from group 225.1.0.1 and permit all other traffic, enter the following command.

```
device(config)# access-list 101 deny ip any host 225.1.0.1
device(config)# access-list 101 permit ip any any
```

Extended ACL to permit multicast traffic

To permit multicast data traffic from source 97.1.1.50 for group 225.1.0.1 and deny all other traffic, enter the following commands:

```
Device(config)# access-list 102 permit ip host 97.1.1.50 host 225.1.0.1
Device(config)# access-list 102 deny ip any any
```

Displaying multicast boundaries

To display multicast boundary information, enter the **show ip pim interface** command.

```
device# show ip pim interface ethernet 1/1/7
Flags    : SM  - Sparse Mode v2, DM - Dense Mode v2, P - Passive Mode
---------+---------------+----+---+-----------------------+---+---------+-------+------+----------+
Interface|Local          |Mode|St |   Designated Router   |TTL|Multicast|  VRF  | DR   | Override
         |Address        |    |   |Address            Port|Thr|Boundary |       | Prio | Interval
---------+---------------+----+---+-----------------------+---+---------+-------+------+----------+
   e1/1/7 30.0.0.1        SM   Ena Itself                   1 None      default 1        3000ms
Total Number of Interfaces : 1
```

Syntax: show ip pim [**vrf** *vrf-name*] **interface** [**ethernet** *unit/slot/port* | **loopback** *num* | **ve** *num* | **tunnel** *num*]

The **vrf** keyword allows you to display multicast boundary information for the VRF instance identified by the *vrf-name* variable.

The **ethernet** parameter specifies the physical port by its unit, slot, and port number.

The **loopback** parameter specifies the loopback port.

The **ve**parameter specifies a virtual interface.

The **tunnel** parameter specifies a GRE tunnel interface that is being configured. The GRE tunnel interface is enabled under the device PIM configuration.

The following table describes the output from the **show ip pim interface ethernet** command.

Field	Description
Interface	Name of the interface.
Local Address	IP address of the interface.
Mode	PIM mode, dense or sparse..
St	PIM status for this interface, enabled or disabled.
Designated Router Address, Port	Address, port number of the designated router.
TTL Thr	Time to live threshold. Multicast packets with TTL less than this threshold value are not be forwarded on this interface.
Multicast Boundary	Multicast boundary ACL, if one exists.
VRF	Name of the VRF.
DR Prio	Designated router priority assigned to this interface.
Override Interval	Effective override interval in milliseconds.

PIM Dense

NOTE
This section describes the "dense" mode of PIM, described in RFC 3973. Refer to PIM Sparse on page 89 for information about PIM Sparse.

PIM was introduced to simplify some of the complexity of the routing protocol at the cost of additional overhead tied with a greater replication of forwarded multicast packets. PIM builds source-routed multicast delivery trees and employs reverse path check when forwarding multicast packets.

There are two modes in which PIM operates: Dense and Sparse. The Dense Mode is suitable for densely populated multicast groups, primarily in the LAN environment. The Sparse Mode is suitable for sparsely populated multicast groups with the focus on WAN.

PIM uses the IP routing table instead of maintaining its own, thereby being routing protocol independent.

Initiating PIM multicasts on a network

Once PIM is enabled on each device, a network user can begin a video conference multicast from the server on R1 as shown in Figure 3 on page 79. When a multicast packet is received on a PIM-capable device interface, the interface checks its IP routing table to determine whether the interface that received the message provides the shortest path back to the source. If the interface does provide the shortest path back to the source, the multicast packet is then forwarded to all neighboring PIM devices. Otherwise, the multicast packet is discarded and a prune message is sent back upstream.

In Figure 3 on page 79, the root node (R1) is forwarding multicast packets for group 229.225.0.1, which it receives from the server, to its downstream nodes, R2, R3, and R4. Device R4 is an intermediate device with R5 and R6 as its downstream devices. Because R5 and R6 have no downstream interfaces, they are leaf nodes. The receivers in this example are those workstations that are resident on devices R2, R3, and R6.

Pruning a multicast tree

As multicast packets reach these leaf devices, the devices check their IGMP databases for the group. If the group is not in the IGMP database of the device, the device discards the packet and sends a prune message to the upstream device. The device that discarded the packet also maintains the prune state for the source, group (S,G) pair. The branch is then pruned (removed) from the multicast tree. No further multicast packets for that specific (S,G) pair will be received from that upstream device until the prune state expires. You can configure the PIM Prune Timer (the length of time that a prune state is considered valid).

For example, in the “Transmission of multicast packets from the source to host group members” figure, the sender with address 207.95.5.1 is sending multicast packets to the group 229.225.0.1. If a PIM device receives any groups other than that group, the device discards the group and sends a prune message to the upstream PIM device.

In the “Pruning leaf nodes from a multicast tree” figure, device R5 is a leaf node with no group members in its IGMP database. Therefore, the device must be pruned from the multicast tree. R5 sends a prune message upstream to its neighbor device R4 to remove itself from the multicast delivery tree and install a prune state, as seen in the “Pruning leaf nodes from a multicast tree” figure. Device 5 will not receive any further multicast traffic until the prune age interval expires.

When a node on the multicast delivery tree has all of its downstream branches (downstream interfaces) in the prune state, a prune message is sent upstream. In the case of R4, if both R5 and R6 are in a prune state at the same time, R4 becomes a leaf node with no downstream interfaces and sends a prune message to R1. With R4 in a prune state, the resulting multicast delivery tree would consist only of leaf nodes R2 and R3.

FIGURE 3 Transmission of multicast packets from the source to host group members

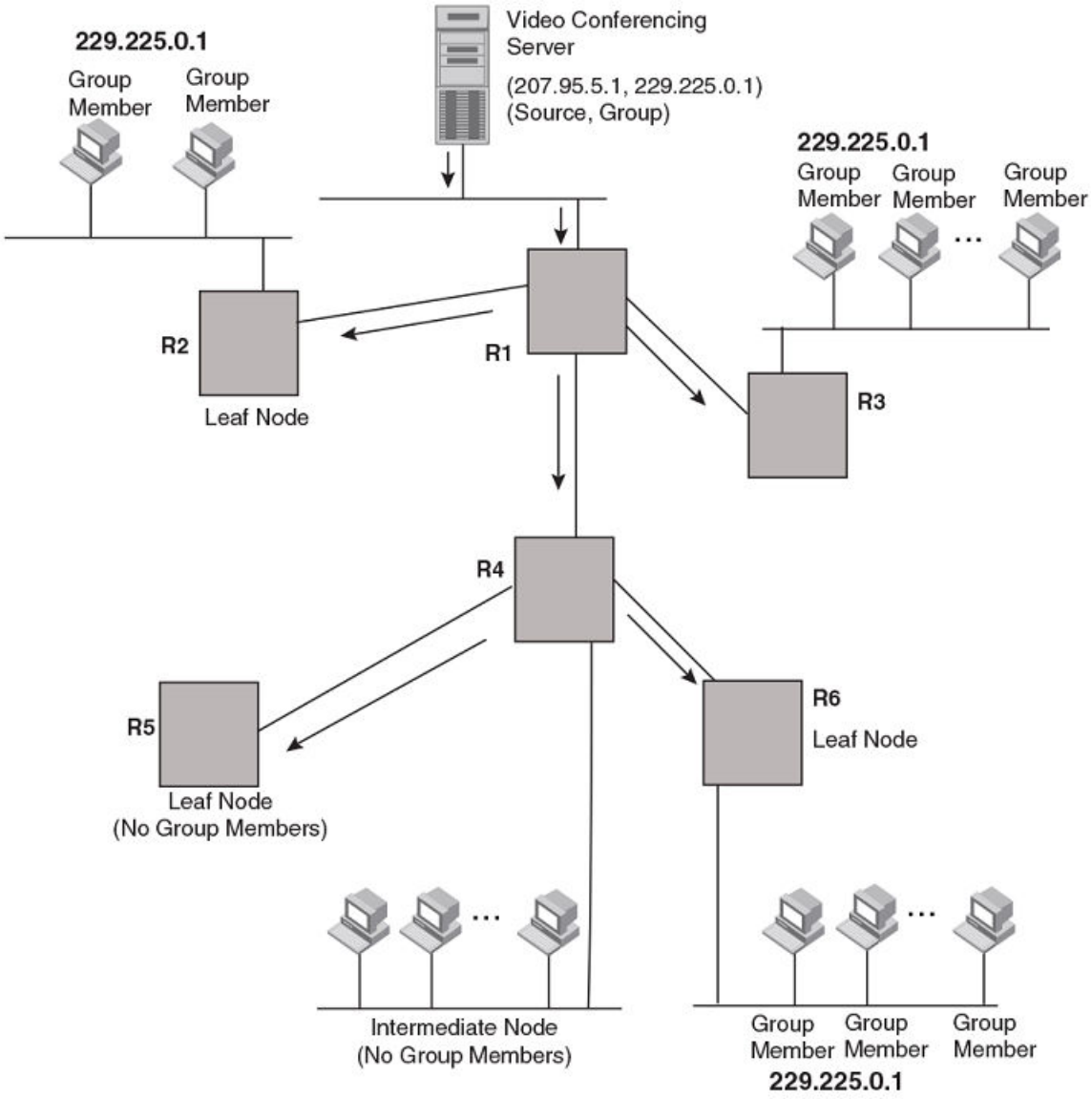

FIGURE 4 Pruning leaf nodes from a multicast tree

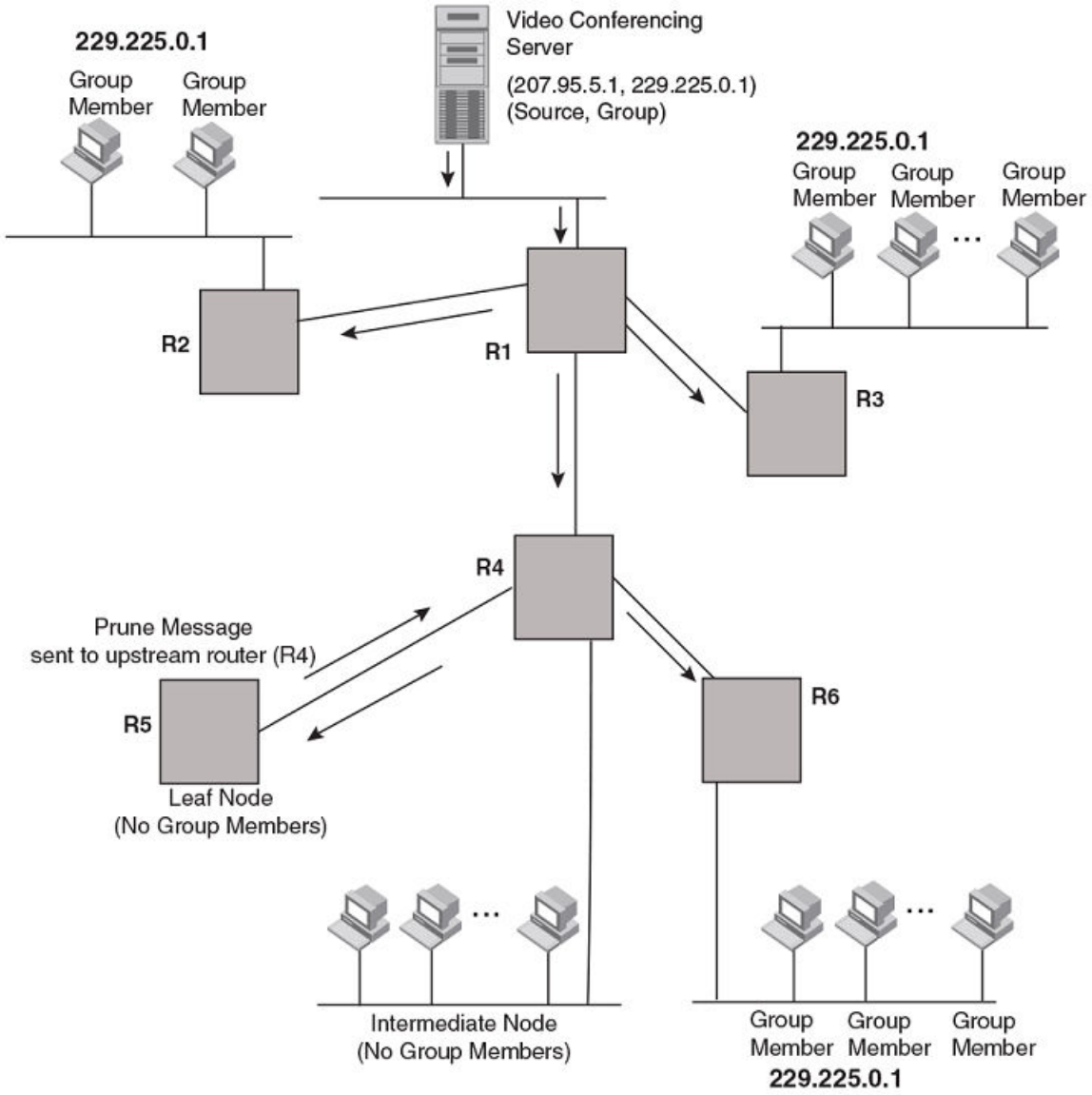

Grafts to a multicast tree

A PIM device restores pruned branches to a multicast tree by sending graft messages towards the upstream device. Graft messages start at the leaf node and travel up the tree, first sending the message to its neighbor upstream device.

In the preceding example, if a new 229.255.0.1 group member joins on device R6, which was previously pruned, a graft is sent upstream to R4. Since the forwarding state for this entry is in a prune state, R4 sends a graft to R1. Once R4 has joined the tree, R4 along with R6 once again receive multicast packets.

Prune and graft messages are continuously used to maintain the multicast delivery tree. You do not need to configure anything.

PIM DM versions

The Ruckus device supports only PIM V2. PIM DM V2 sends messages to the multicast address 224.0.0.13 (ALL-PIM-ROUTERS) with protocol number 103.

Configuring PIM DM

NOTE
This section describes how to configure the "dense" mode of PIM, described in RFC 1075. Refer to Configuring PIM Sparse on page 91 for information about configuring PIM Sparse.

Enabling PIM on the device and on an interface

By default, PIM is disabled. To enable PIM:

- Enable the feature globally.
- Configure the IP interfaces that will use PIM.
- Enable PIM locally on the ports that have the IP interfaces you configured for PIM.

Suppose you want to initiate the use of desktop video for fellow users on a sprawling campus network. All destination workstations have the appropriate hardware and software but the devices that connect the various buildings need to be configured to support PIM multicasts from the designated video conference server as shown in the “Pruning leaf nodes from a multicast tree” figure.

PIM is enabled on each of the devices shown in the “Pruning leaf nodes from a multicast tree” figure, on which multicasts are expected. You can enable PIM on each device independently or remotely from one of the devices with a Telnet connection. Follow the same steps for each device. All changes are dynamic.

Globally enabling and disabling PIM

To globally enable PIM, enter the following command.

```
Device(config)# router pim
```

Syntax:[no] router pim

The **[no] router pim** command behaves in the following manner:

- Entering a **router pim** command to enable PIM does not require a software reload.
- Entering a **no router pim** command removes all configuration for PIM multicast on a device (**router pim** level) only.

Enabling PIM for a specified VRF

To enable PIM for the VRF named "blue", use the following commands.

```
Device(config)# router pim vrf blue
```

Syntax: [no] router pim [**vrf** *vrf-name*]

The **vrf** parameter allows you to configure PIM (PIM-DM and PIM-SM) on the virtual routing and forwarding instance (VRF) specified by the *vrf-name* variable. All PIM parameters available for the default device instance are configurable for a VRF-based PIM instance.

The **[no] router pim vrf** command behaves in the following manner:

- Entering the **router pim vrf** command to enable PIM does not require a software reload.
- Entering a **no router pim vrf** command removes all configuration for PIM multicast on the specified VRF.

Modifying PIM global parameters

PIM global parameters come with preset values. The defaults work well in most networks, but you can modify the following parameters if necessary:

- Neighbor timeout
- Hello timer
- Prune timer
- Prune wait timer
- Graft retransmit timer
- Inactivity timer

Modifying neighbor timeout

Neighbor timeout is the interval after which a PIM device will consider a neighbor to be absent. Absence of PIM hello messages from a neighboring device indicates that a neighbor is not present.

The interval can be set between 3 and 65535 seconds, and it should not be less than 3.5 times the hello timer value. The default value is 105 seconds.

To apply a PIM neighbor timeout value of 360 seconds to all ports on the device operating with PIM, enter the following.

```
Device(config)# router pim
Device(config-pim-router)# nbr-timeout 360
```

Syntax: [no] nbr-timeout *seconds*

The default is 105 seconds. The range is 35 to 65535 seconds.

Modifying hello timer

This parameter defines the interval at which periodic hellos are sent out PIM interfaces. Devices use hello messages to inform neighboring devices of their presence. The interval can be set between 10 and 3600 seconds, and the default rate is 30 seconds.

To apply a PIM hello timer of 120 seconds to all ports on the device operating with PIM, enter the following.

```
Device(config)# router pim
Device(config-pim-router)# hello-timer 120
```

Syntax: [no] hello-timer *10-3600*

The default is 30 seconds.

Modifying prune timer

This parameter defines how long a PIM device will maintain a prune state for a forwarding entry.

The first received multicast interface is forwarded to all other PIM interfaces on the device. If there is no presence of groups on that interface, the leaf node sends a prune message upstream and stores a prune state. This prune state travels up the tree and installs a prune state.

A prune state is maintained until the prune timer expires or a graft message is received for the forwarding entry. The default value is 180 seconds.

To set the PIM prune timer to 90, enter the following.

```
Device(config)# router pim
Device(config-pim-router)# prune-timer 90
```

Syntax: [no] prune-timer *seconds*

The default is 180 seconds. The range is 60 to 3600 seconds.

Modifying the prune wait timer

The **prune-wait** command allows you to configure the amount of time a PIM device will wait before stopping traffic to neighbor devices that do not want the traffic. The value can be from zero to 30 seconds. The default is three seconds. A smaller prune wait value reduces flooding of unwanted traffic.

A prune wait value of zero causes the PIM device to stop traffic immediately upon receiving a prune message. If there are two or more neighbors on the physical port, then the **prune-wait** command should not be used because one neighbor may send a prune message while the other sends a join message at the same time, or within less than three seconds.

To set the prune wait time to zero, enter the following commands.

```
Device(config)#router pim
Device(config-pim-router)#prune-wait 0
```

Syntax: [no] prune-wait *seconds*

The *seconds* can be 0 - 30. A value of 0 causes the PIM device to stop traffic immediately upon receiving a prune message. The default is 3 seconds.

To view the currently configured prune wait time, enter the **show ip pim dense** command as described in the Displaying basic PIM Dense configuration information" section.

Modifying graft retransmit timer

The graft retransmit timer defines the interval between the transmission of graft messages.

A graft message is sent by a device to cancel a prune state. When a device receives a graft message, the device responds with a Graft Ack (acknowledge) message. If this Graft Ack message is lost, the device that sent the graft message will resend it.

To change the graft retransmit timer from the default of 180 to 90 seconds, enter the following.

```
Device(config)# router pim
Device(config-pim-router)# graft-retransmit-timer 90
```

Syntax: [no] graft-retransmit-timer *seconds*

The default is 180 seconds. The range is from 60 to 3600 seconds.

Modifying inactivity timer

The device deletes a forwarding entry if the entry is not used to send multicast packets. The PIM inactivity timer defines how long a forwarding entry can remain unused before the device deletes it.

To apply a PIM inactivity timer of 90 seconds to all PIM interfaces, enter the following.

```
Device(config)# router pim
Device(config-pim-router)# inactivity-timer 90
```

Syntax: [no] inactivity-timer *seconds*

The default is 180 seconds. The range is from 60 to 3600 seconds.

Selection of shortest path back to source

By default, when a multicast packet is received on a PIM-capable interface in a multi-path topology, the interface checks its IP routing table to determine the shortest path back to the source. If the alternate paths have the same cost, the first alternate path in the table is picked as the path back to the source. For example, in the following example, the first four routes have the same cost back to the source. However, 137.80.127.3 is chosen as the path to the source since it is the first one on the list. The device rejects traffic from any port other than Port V11 on which 137.80.127.3 resides

```
Total number of IP routes: 19
Type Codes - B:BGP D:Connected I:ISIS S:Static R:RIP O:OSPF Cost - Dist/Metric
     Destination     Gateway         Port       Cost       Type
       ..
     172.17.41.4     137.80.127.3    v11        2          O
     172.17.41.4     137.80.126.3    v10        2          O
     172.17.41.4     137.80.129.1    v13        2          O
     172.17.41.4     137.80.128.3    v12        2          O
     172.17.41.8     0.0.0.0         1/2        1          D
```

Failover time in a multi-path topology

When a port in a multi-path topology fails, multicast devices, depending on the routing protocol being used, take a few seconds to establish a new path, if the failed port is the input port of the downstream device.

Configuring a DR priority

The DR priority option lets you give preference to a particular device in the DR election process by assigning it a numerically higher DR priority. This value can be set for IPv4 interfaces. To set a DR priority higher than the default value of 1, use the **ip pim dr-priority** command as shown:

```
device(config-if-e10000-1/3/24)# ip pim dr-priority 50
```

Syntax: [no] ip pim dr-priority *priority-value*

The *priority-value* variable is the value that you want to set for the DR priority. Optional values are: 0 - 65535. The default value is 1.

The **no** option removes the command and sets the DR priority back to the default value of 1.

The following information may be useful for troubleshooting.

1. If more than one device has the same DR priority on a subnet (as in the case of default DR priority on all), the device with the numerically highest IP address on that subnet is elected as the DR.
2. The DR priority information is used in the DR election ONLY IF ALL the PIM devices connected to the subnet support the DR priority option. If there is at least one PIM device on the subnet that does not support this option, then the DR election falls back to the backwards compatibility mode in which the device with the numerically highest IP address on the subnet is declared the DR regardless of the DR priority values.

Displaying basic PIM Dense configuration information

To display PIM Dense configuration information, enter the following command at any CLI level.

```
Device(config)# show ip pim dense

Global PIM Dense Mode Settings
  Maximum Mcache            : 12992    Current Count                    : 2
  Hello interval            : 30       Neighbor timeout                 : 105
  Join/Prune interval       : 60       Inactivity interval              : 180
  Hardware Drop Enabled     : Yes      Prune Wait Interval              : 3
  Graft Retransmit interval : 180      Prune Age                        : 180
  Route Precedence          : mc-non-default mc-default uc-non-default uc-default
```

Syntax: show ip pim [**vrf** *vrf-name*] **dense**

The **vrf** keyword allows you to display PIM dense configuration information for the VRF instance identified by the *vrf-name* variable.

This display shows the following information.

Field	Description
Maximum Mcache	The maximum number multicast cache entries allowed on the device.
Current Count	The number of multicast cache entries currently used.
Hello interval	How frequently the device sends hello messages out the PIM dense interfaces.
Neighbor timeout	The interval after which a PIM device will consider a neighbor to be absent.
Join/Prune interval	How long a PIM device will maintain a prune state for a forwarding entry.
Inactivity interval	How long a forwarding entry can remain unused before the device deletes it.
Hardware Drop Enabled	Displays Yes if the Passive Multicast Route Insertion feature is enabled and No if it is not.
Prune Wait Interval	The amount of time a PIM device waits before stopping traffic to neighbor devices that do not want the traffic. The value can be from zero to three seconds. The default is three seconds.
Graft Retransmit interval	The interval between the transmission of graft messages.
Prune Age	The number of packets the device sends using the path through the RP before switching to using the SPT path.
Route Precedence	The route precedence configured to control the selection of routes based on the four route types: • Non-default route from the mRTM • Default route from the mRTM • Non-default route from the uRTM • Default route from the uRTM

Displaying all multicast cache entries in a pruned state

Use the following command to display all multicast cache entries that are currently in a pruned state and have not yet aged out.

```
Device(config)# show ip pim prune
    1 (104.1.1.2 231.0.1.1):
   e2/2,2/2(150)
    2 (108.1.1.100 231.0.1.1):
```

```
    e2/2,2/2(150)
     3 (104.1.1.2 231.0.1.2):
    e2/2,2/2(150)
     4 (108.1.1.100 231.0.1.2):
    e2/2,2/2(150)
     5 (108.1.1.100 231.0.1.3):
    e2/2,2/2(150)
     6 (104.1.1.2 231.0.1.4):
    e2/2,2/2(150)
     7 (108.1.1.100 231.0.1.4):
    e2/2,2/2(150)
     8 (104.1.1.2 231.0.1.5):
    e2/2,2/2(150)
     9 (108.1.1.100 231.0.1.5):
    e2/2,2/2(150)
Total Prune entries: 9
```

Syntax: show ip pim [**vrf** *vrf-name*] **prune**

Displaying all multicast cache entries

You can use the following command to display all multicast cache entries.

```
device(config)# show ip pim mcache
IP Multicast Mcache Table
Entry Flags : SM - Sparse Mode, SSM - Source Specific Multicast, DM - Dense Mode
       RPT - RPT Bit, SPT - SPT Bit, LSRC - Local Source, LRCV - Local Receiver
       HW - HW Forwarding Enabled, FAST - Resource Allocated, TAG - Need For
        Replication Entry
       REGPROB - Register In Progress, REGSUPP - Register Suppression Timer
       MSDPADV - Advertise MSDP, NEEDRTE - Route Required for Src/RP, PRUN - DM
        Prune Upstream
Interface Flags: IM - Immediate, IH - Inherited, WA - Won Assert
       MJ - Membership Join, MI - Membership Include, ME - Membership Exclude
       BR - Blocked RPT, BA - Blocked Assert, BF - Blocked Filter, BI - Blocked IIF
Total entries in mcache: 20
1  (140.140.140.3, 225.0.0.1) in v340 (tag e1/1/8), Uptime 00:00:02
  Source is directly connected
  Flags (0x200004e1) DM HW FAST TAG
  fast ports: ethe 1/4/6 ethe 1/8/26
  AgeSltMsk: 1, L2 FID: 8188, DIT: 3
  Forwarding_oif: 2
  L3 (HW) 2:
    TR(e1/4/6,e1/4/6)(VL330), 00:00:02/0, Flags: IM
    e1/8/26(VL310), 00:00:02/0, Flags: IM
  Src-Vlan: 340
```

Syntax: show ip pim mcache [*source-address* | *group-address* | **counts** | **dense** | *dit-idx* | **g_entries** | **receiver** | **sg_entries** | **sparse** | **ssm**]

The *source-address* parameter selects the multicast cache source address.

The *group-address* parameter selects the multicast cache group address.

The **counts** keyword indicates the count of entries.

The **dense** keyword displays only the PIM Dense Mode entries.

The *dit-idx* variable allows you to display all entries that match a specified dit.

The **g_entries** keyword displays only the (*, G) entries.

The **receiver** keyword allows you to display all entries that egress a specified interface.

The **sg_entries** keyword displays only the (S, G) entries.

The **sparse** keyword displays only the PIM Sparse Mode entries.

The **ssm** keyword displays only the SSM entries.

TABLE 3 Output fields from the show ip pim mcache command

Field	Description
Total entries in mcache	Shows the total number of PIM mcache entries
MJ	Membership Join
MI	Membership Include
ME	Membership Exclude - Legend for the mcache entry printed once per page, it gives the explanation of each of the flags used in the entry.
BR	Blocked RPT
BA	Blocked Assert
BF	Blocked Filter
BI	Blocked IIF
Uptime	Shows the software entry uptime.
upstream neighbor	Shows the upstream neighbor for the Source/RP based on the type of entry. For (*,G) it shows the upstream neighbor towards the RP. For (S,G) entries it shows the upstream neighbor towards the source.
Flags	Flags Represent Entry flags in hex format in the braces. And indicates the meaning of the flags set in abbreviated string whose explanations are as follows. Only shows the flags which are set. SM - Shows If the entry is created by PIM Sparse Mode DM - Shows If DM mode entry is enabled SSM - Shows If the SSM mode entry is enabled RPT - Shows If the entry is on the Rendezvous Point (RP) SPT - Shows If the entry is on the source tree LSRC - Shows If the source is in a directly-connected interface LRcv - Shows If the receiver is directly connected to the router REG - if the data registration is in progress L2REG - if the source is directly connected to the router REGSUPP - if the register suppression timer is running RegProbe HW - Shows If the candidate for hardware forwarding is enabled FAST - Shows If the resources are allocated for hardware forwarding TAG - Shows If there is a need for allocating entries from the replication table MSDPADV - Shows If RP is responsible for the source and must be advertised to its peers. NEEDRTE - Shows If there is no route to the source and RP is available PRUNE - Shows If PIM DM Prune to upstream is required
RP	Show the IP address of the RP.
fast ports	Shows forwarding port mask.
AgeSltMsk	Shows the slot number on which active module expects ingress traffic. This value is 1 if the entry is programmed in hardware and is 0 if the entry is not programmed in hardware.

TABLE 3 Output fields from the show ip pim mcache command (continued)

Field	Description
L2 FID	Hardware Resource allocated for the traffic switched to receivers in the ingress VLAN.
DIT	Hardware Resource allocated for router receivers.
RegPkt	Shows the number of packets forwarded due to the Register decapsulation. This field is displayed only on the active module. This field displays only those entries for which the device is the RP. However, for a PIM DM entry the RegPkt field is not displayed for the (S,G) entries on the active module.
Number of matching entries	Shows the total number of mcache entries matching a particular multicast filter specified.
Outgoing interfaces Section	This section consists of three parts. L3 OIFs, L2OIFs and Blocked OIFs. And each section has Format of L3/L2/Blocked followed by (HW/SW) followed by count of the number of OIF in each section. Additionally, each section displays the OIFs one per line. And shows the OIF in the format eth/Tr(Vlan) followed by uptime/expiry time, followed by the Flags associated with each OIF.
L3	Shows whether the traffic is routed out of the interface.
L2	Shows whether the traffic is switched out of the interface.
HW	Shows whether the entry is hardware forwarded.
SW	Shows whether the entry is software forwarded.
Eth/Tr(VL1)	Shows the outgoing interface on the specified VLAN.
Flags (explanation of flags in the OIF section)	Shows the flags set in each of the Outgoing interface in abbreviated string format whose explanations are as follows. Legend of this shown at the top of each entry IM - Immediate IH - Inherited MJ - Membership Join MI - Membership Include ME - Membership Exclude BR - Blocked due to SG RPT BA - Blocked due to Assert BF - Blocked due to Filter BI - Blocked IIF (Incoming interface) matches OIF
Src-VLAN	VLAN associated with the ingress interface.
MCTPEERF - Traffic Forw By Cluster Peer CCEP	Applies only to Layer 3 multicast routing over MCT. This means multicast traffic for this stream is forwarded by cluster peer [remote] CCEP port because of flow load balancing

You can use the following command to filter the output to display only entries that egress ethernet port 1/1/1.

```
device#show ip pim mcache receiver ethernet 1/1/1
```

You can use the following command to filter the output to display only the Source Specific Multicast (SSM) routes in the mcache.

```
device#show ip pim mcache ssm
```

You can use the following command to filter the output to display only the Sparse Mode routes in the mcache.

```
device#show ip pim mcache sparse
```

You can use the following command to filter the output to display only the Dense Mode routes in the mcache.

```
device#show ip pim mcache dense
```

You can use the following command to filter the output to display only the entries matching a specific source.

```
device#show ip pim mcache 1.1.1.1
```

You can use the following command to filter the output to display only the entries matching a specific group.

```
device#show ip pim mcache 239.1.1.1
```

Displaying information across VRFs

Use the following command to display information across all active VRFs.

```
device#show ip pim all-vrf
 bsr      Bootstrap router
 flow-count  Show flowcache counters
 hw-resource PIM hw resources
 interface   PIM interface
 neighbor    PIM neighbor states
 resource    PIM resources
 rp-set    List of rendezvous point (RP) candidates
 traffic   Active multicast traffic
```

PIM convergence on MAC movement

PIM convergence occurs when the PIM module is notified of a topology change.

The notification is triggered upon a change in port status, Reverse Path Forwarding (RPF) failure in the hardware, or by the unicast routing module if there is a change in the Layer 3 topology. If the topology change occurs without setting off any of the two events or if the Layer 3 topology change is not notified by the unicast routing module, PIM convergence does not take place.

If there is a change in the source traffic at the Layer 2 interface level, the RPF check fails because only loose RPF check is supported (loose RPF check detects the change in the source traffic only at the Layer 3 interface level). A notification for a change in the source traffic at the Layer 2 interface level can be triggered by establishing a signaling process for MAC address movement. The MAC address movement notification triggers RPF check on MAC movement for directly connected sources. The MAC address movement notification can be triggered by configuring the **ip multicast-routing rpf-check mac-movement** command. The MAC address movement notification triggers a notification to the PIM module which results in convergence. PIM convergence is supported in both PIM Sparse and PIM Dense modes.

PIM convergence on MAC movement is supported on the Ruckus ICX 7xxx switches.

> **NOTE**
> PIM convergence on MAC movement is applicable only in a topology where the multicast source port and PIM routers are in the same Layer 2 domain.

PIM Sparse

Ruckus devices support Protocol Independent Multicast (PIM) Sparse version 2. PIM Sparse provides multicasting that is especially suitable for widely distributed multicast environments. The Ruckus implementation is based on RFC 2362.

In a PIM Sparse network, a PIM Sparse device that is connected to a host that wants to receive information for a multicast group must explicitly send a join request on behalf of the receiver (host).

PIM Sparse devices are organized into domains. A PIM Sparse domain is a contiguous set of devices that all implement PIM and are configured to operate within a common boundary. Figure 5 shows a simple example of a PIM Sparse domain. This example shows three devices configured as PIM Sparse devices. The configuration is described in detail following the figure.

FIGURE 5 Example PIM Sparse domain

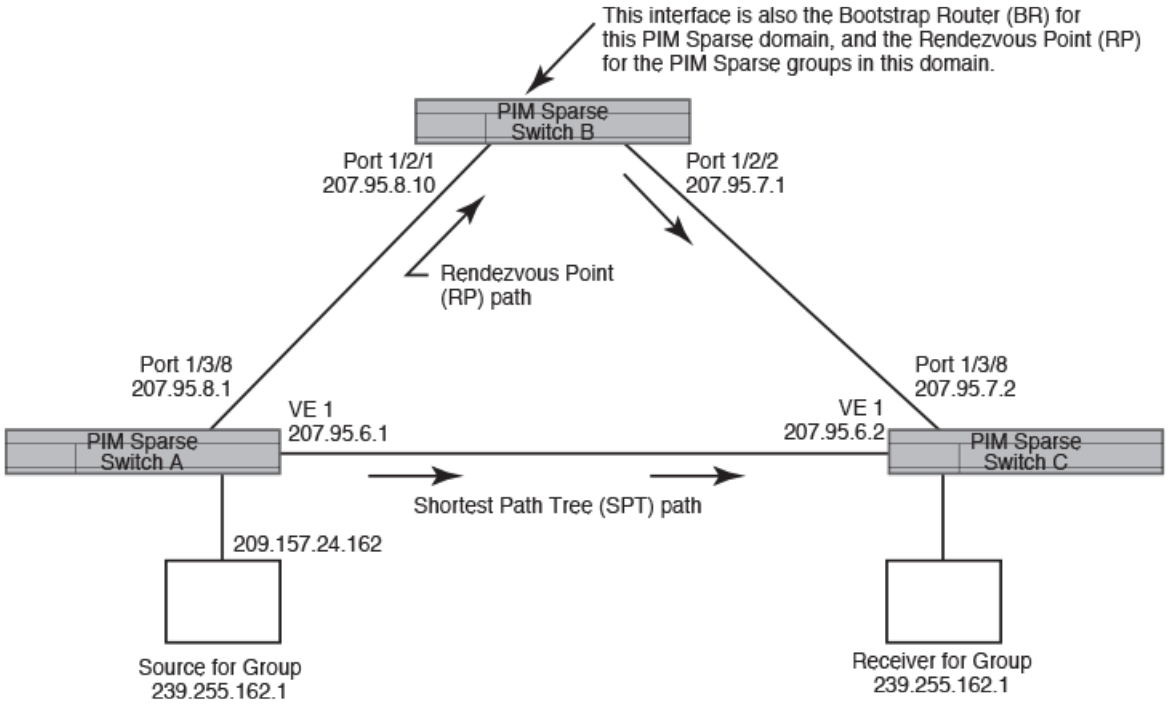

PIM Sparse device types

Devices that are configured with PIM Sparse interfaces also can be configured to fill one or more of the following roles:

- PMBR - A PIM device that has some interfaces within the PIM domain and other interface outside the PIM domain. PBMRs connect the PIM domain to the Internet.
- BSR - The Bootstrap Router (BSR) distributes RP information to the other PIM Sparse devices within the domain. Each PIM Sparse domain has one active BSR. For redundancy, you can configure ports on multiple devices as candidate BSRs. The PIM Sparse protocol uses an election process to select one of the candidate BSRs as the BSR for the domain. The BSR with the highest BSR priority (a user-configurable parameter) is elected. If the priorities result in a tie, then the candidate BSR interface with the highest IP address is elected. In the example in Figure 5 on page 90, PIM Sparse device B is the BSR. Port 1/2/2 is configured as a candidate BSR.
- RP - The RP is the meeting point for PIM Sparse sources and receivers. A PIM Sparse domain can have multiple RPs, but each PIM Sparse multicast group address can have only one active RP. PIM Sparse devices learn the addresses of RPs and the groups for which they are responsible from messages that the BSR sends to each of the PIM Sparse devices. In the example in Figure 5 on page 90, PIM Sparse device B is the RP. Port 1/2/2 is configured as a candidate Rendezvous Point (RP). To enhance overall network performance, the Ruckus device uses the RP to forward only the first packet from a group source to the group's receivers. After the first packet, the Ruckus device calculates the shortest path between

the receiver and source (the Shortest Path Tree, or SPT) and uses the SPT for subsequent packets from the source to the receiver. The Ruckus device calculates a separate SPT for each source-receiver pair.

NOTE
It is recommended that you configure the same ports as candidate BSRs and RPs.

RP paths and SPT paths

Figure 5 on page 90 shows two paths for packets from the source for group 239.255.162.1 and a receiver for the group. The source is attached to PIM Sparse device A and the recipient is attached to PIM Sparse device C. PIM Sparse device B in is the RP for this multicast group. As a result, the default path for packets from the source to the receiver is through the RP. However, the path through the RP sometimes is not the shortest path. In this case, the shortest path between the source and the receiver is over the direct link between device A and device C, which bypasses the RP (device B).

To optimize PIM traffic, the protocol contains a mechanism for calculating the Shortest Path Tree (SPT) between a given source and receiver. PIM Sparse devices can use the SPT as an alternative to using the RP for forwarding traffic from a source to a receiver. By default, the Ruckus device forwards the first packet they receive from a given source to a given receiver using the RP path, but forward subsequent packets from that source to that receiver through the SPT. In Figure 5 on page 90, device A forwards the first packet from group 239.255.162.1's source to the destination by sending the packet to device B, which is the RP. Device B then sends the packet to device C. For the second and all future packets that device A receives from the source for the receiver, device A forwards them directly to device C using the SPT path.

Configuring PIM Sparse

To configure a Ruckus device for PIM Sparse, perform the following tasks:

- Configure the following global parameter:
  - Enable the PIM Sparse mode of multicast routing.
- Configure the following interface parameters:
  - Configure an IP address on the interface
  - Enable PIM Sparse.
  - Identify the interface as a PIM Sparse border, if applicable.
- Configure the following PIM Sparse global parameters:
  - Identify the Ruckus device as a candidate PIM Sparse Bootstrap Router (BSR), if applicable.
  - Identify the Ruckus device as a candidate PIM Sparse Rendezvous Point (RP), if applicable.
  - Specify the IP address of the RP (if you want to statically select the RP).

NOTE
It is recommended that you configure the same Ruckus device as both the BSR and the RP.

Current limitations

The implementation of PIM Sparse in the current software release has the following limitations:

- PIM Sparse and regular PIM (dense mode) cannot be used on the same interface.
- You cannot configure or display PIM Sparse information using the Web Management Interface. (You can display some general PIM information, but not specific PIM Sparse information.)

Configuring global PIM Sparse parameters

To configure basic global PIM Sparse parameters, enter commands such as the following on each Ruckus device within the PIM Sparse domain.

```
Device(config)# router pim
```

Syntax: [no] router pim

> **NOTE**
> You do not need to globally enable IP multicast routing when configuring PIM Sparse.

The command in this example enables IP multicast routing, and enables the PIM Sparse mode of IP multicast routing. The command does not configure the Ruckus device as a candidate PIM Sparse Bootstrap Router (BSR) and candidate Rendezvous Point (RP). You can configure a device as a PIM Sparse device without configuring the Ruckus device as a candidate BSR and RP. However, if you do configure the device as one of these, it is recommended that you configure the device as both of these. Refer to the "Configuring BSRs" section.

Entering a **no router pim** command does the following:

- Disables PIM.
- Removes all configuration for PIM multicast on a Ruckus device (**router pim** level) only.

Enabling PIM Sparse for a specified VRF

To enable PIM for the VRF named "blue", use the following commands.

```
Device(config)# router pim vrf blue
```

Syntax: [no] router pim [**vrf** *vrf-name*]

The **vrf** parameter allows you to configure PIM (PIM-DM and PIM-SM) on the virtual routing instance (VRF) specified by the *vrf-name* variable. All PIM parameters available for the default router instance are configurable for a VRF-based PIM instance.

The **no router pim vrf** command behaves in the following manner:

- Entering the **router pim vrf** command to enable PIM does not require a software reload.
- Entering a **no router pim vrf** command removes all configuration for PIM multicast on the specified VRF.

Configuring PIM interface parameters

After you enable IP multicast routing and PIM Sparse at the global level, you must enable it on the individual interfaces connected to the PIM Sparse network.

To enable PIM Sparse mode on an interface, enter commands such as the following.

```
device(config)# interface ethernet 1/2/2
device(config-if-e10000-1/2/2)# ip address 207.95.7.1 255.255.255.0
device(config-if-e10000-1/2/2)# ip pim-sparse
```

Syntax: [no] ip pim-sparse

The commands in this example add an IP interface to port 1/2/2, then enable PIM Sparse on the interface.

If the interface is on the border of the PIM Sparse domain, you also must enter the following command.

```
device(config-if-e10000-1/2/2)# ip pim border
```

Syntax: [no] ip pim border

Configuring BSRs

In addition to the global and interface parameters described in the previous sections, you need to identify an interface on at least one device as a candidate PIM Sparse Bootstrap router (BSR) and candidate PIM Sparse rendezvous point (RP).

NOTE
It is possible to configure the device as only a candidate BSR or RP, but it is recommended that you configure the same interface on the same device as both a BSR and an RP.

This section describes how to configure BSRs. Refer to the "Configuring RPs" section for instructions on how to configure RPs.

To configure the device as a candidate BSR, enter commands such as the following.

```
Device(config)# router pim
Device(config-pim-router)# bsr-candidate ethernet 1/2/2 30 255
```

These commands configure the PIM Sparse interface on port 1/2/2 as a BSR candidate, with a hash mask length of 30 and a priority of 255.

Syntax: [no] bsr-candidate { **ethernet** *unit/slot/port* | **loopback** *num* | **ve** *num* | **tunnel** } *num hash-mask-length* [*priority*]

The **ethernet** *unit/slot/port*, **loopback** *num*, **ve** *num*, and **tunnel** *num* parameters specify the interface. The device will advertise the IP address of the specified interface as a candidate BSR.

- Enter **ethernet** *unit/slot/port* for a physical interface (port).
- Enter **ve** *num* for a virtual interface.
- Enter **loopback** *num* for a loopback interface.
- Enter **tunnel** *num* for a GRE tunnel interface.

The *numhash-mask-length* variable specifies the number of bits in a group address that are significant when calculating the group-to-RP mapping. You can specify a value from 1 to 32.

NOTE
it is recommended that you specify 30 for IP version 4 (IPv4) networks.

The *priority* variable specifies the BSR priority. You can specify a value from 0 to 255. When the election process for BSR takes place, the candidate BSR with the highest priority becomes the BSR. The default is 0.

Configuring RPs

Enter a command such as the following to configure the device as a candidate RP.

```
Device(config-pim-router)# rp-candidate ethernet 1/2/2
```

Syntax: [no] rp-candidate ethernet { **ethernet** *unit/slot/port* | **loopback** *num* | **ve** *num* | **tunnel** *num* }

The **ethernet** *unit/slot/port*, **loopback** *num*, **ve** *num*, and **tunnel** *num* parameters specify the interface. The device will advertise the IP address of the specified interface as a candidate RP.

- Enter **ethernet** *unit/slot/port* for a physical interface (port).
- Enter **ve** *num* for a virtual interface.
- Enter **loopback** *num* for a loopback interface.
- Enter **tunnel** *num* for a GRE tunnel interface.

By default, this command configures the device as a candidate RP for all group numbers beginning with 224. As a result, the device is a candidate RP for all valid PIM Sparse group numbers. You can change this by adding or deleting specific address ranges. Consider the following when configuring the RP.

- When the candidate RP is configured, before explicitly specifying the groups that it serves, the c-rp does, by default, serve all the groups in the PIMSM multicast range, but this includes all groups beginning with 224.x.x.x all the way up to 239.x.x.x. This is reflected in the "rp-candidate add 224.0.0.0 4" line displayed as part of the runtime configuration. This entry will be referred to as the DEFAULT PREFIX.
- When any group prefix is explicitly added (and the 224.0.0.0/4 prefix itself can also be explicitly added through CLI), the default prefix is implicitly removed. Now, the only groups served by the candidate RP, are the groups that have been explicitly added.
- All explicitly added groups can be removed using the "delete" option or "no ... add" option. However, once all the explicitly added groups are deleted from the Candidate RP group prefix list, the default prefix becomes active once more. This default group prefix CANNOT BE REMOVED.
- It is not possible to punch holes in the group prefix range. For instance executing

rp-candidate add 228.0.0.0/16

and then,

rp-candidate delete 228.0.1.0/24

is not permissible. It cannot be used to ensure that the rp-candidate will serve all group prefixes in the 228.0.0.0/16 range except those in the 228.0.1.0/24 range.

The following example narrows the group number range for which the device is a candidate RP by explicitly adding a range.

```
Device(config-pim-router)# rp-candidate add 224.126.0.0 16
```

Syntax: [no] rp-candidate add *group-addr mask-bits*

The *group-addr mask-bits* variable specifies the group address and the number of significant bits in the subnet mask. In this example, the device is a candidate RP for all groups that begin with 224.126. When you add a range, you override the default. The device then becomes a candidate RP only for the group address ranges you add.

You also can delete the configured rp-candidate group ranges by entering the following command.

```
Device(config-pim-router)# rp-candidate delete 224.126.22.0 24
```

Syntax: [no] rp-candidate delete *group-addr mask-bits*

The usage of the *group-addr mask-bits* parameter is the same as for the **rp-candidate add** command.

Updating PIM-Sparse forwarding entries with new RP configuration

If you make changes to your static RP configuration, the entries in the PIM-Sparse multicast forwarding table continue to use the old RP configuration until they are aged out.

The **clear pim rp-map** command allows you to update the entries in the static multicast forwarding table immediately after making RP configuration changes. This command is meant to be used with **rp-address** command.

To update the entries in a PIM sparse static multicast forwarding table with new RP configuration, enter the following command at the privileged EXEC level of the CLI.

```
Device(config)# clear ip pim rp-map
```

Syntax: clear ip pim [**vrf** *vrf-name*] **rp-map**

Use the **vrf** keyword to clear the PIM sparse static multicast forwarding table for a VRF instance specified by the *vrf-name* variable.

Statically specifying the RP

It is recommended that you use the PIM Sparse protocol's RP election process so that a backup RP can automatically take over if the active RP router becomes unavailable. However, if you do not want the RP to be selected by the RP election process but instead you want to explicitly identify the RP by P address, use the **rp-address** command.

If you explicitly specify the RP, the device uses the specified RP for all group-to-RP mappings and overrides the set of candidate RPs supplied by the BSR.

> **NOTE**
> Specify the same IP address as the RP on all PIM Sparse devices within the PIM Sparse domain. Make sure the device is on the backbone or is otherwise well connected to the rest of the network.

To specify the IP address of the RP, enter commands such as the following.

```
Device(config)# router pim
Device(config-pim-router)# rp-address 207.95.7.1
```

Syntax: [no] rp-address *ip-addr*

The *ip-addr* variable specifies the IP address of the RP.

The command in this example identifies the device interface at IP address 207.95.7.1 as the RP for the PIM Sparse domain. The device uses the specified RP and ignore group-to-RP mappings received from the BSR.

ACL-based RP assignment

The **rp-address** command allows multiple static rendezvous point (RP) configurations. For each static RP, an ACL can be given as an option to define the multicast address ranges that the static RP permit or deny to serve.

A static RP by default serves the range of 224.0.0.0/4 if the RP is configured without an ACL name. If an ACL name is given but the ACL is not defined, the static RP is set to inactive mode and it will not cover any multicast group ranges.

The optional static RP ACL can be configured as a standard ACL or as an extended ACL. For an extended ACL, the destination filter will be used to derive the multicast group range and all other filters are ignored. The content of the ACL needs to be defined in the order of prefix length; the longest prefix must be placed at the top of the ACL definition.

If there are overlapping group ranges among the static RPs, the static RP with the longest prefix match is selected. If more than one static RP covers the exact same group range, the highest IP static RP will be used.

Configuration considerations:

- The Static RP has higher precedence over RP learnt from the BSR.
- There is a limit of 64 static RPs in the systems.

Configuring an ACL based RP assignment

To configure an ACL based RP assignment, enter commands such as the following.

```
device(config)# router pim
device(config-pim-router)# rp-address 130.1.1.1 acl1
```

Syntax: [no] rp-address *ip_address* [*acl_name_or_id*]

Use the **ip address** parameter to specify the IP address of the device you want to designate as an RP device.

Use the *acl name* or *id* (optional) parameter to specify the name or ID of the ACL that specifies which multicast groups use this RP.

Displaying the static RP

Use the **show ip pim rp-set** command to display static RP and the associated group ranges.

```
device(config)# show ip pim rp-set
Static RP and associated group ranges
-------------------------------------
Static RP count: 4
130.1.1.1
120.1.1.1
120.2.1.1
124.1.1.1
Number of group prefixes Learnt from BSR: 0
No RP-Set present.
```

Use the **show ip pim rp-map** command to display all current multicast group addresses to RP address mapping.

```
device(config)# show ip pim rp-map
Number of group-to-RP mappings: 5
-----------------------------------------
S.No  Group address                    RP address
-----------------------------------------
1     225.1.1.1                        25.0.0.25
2     225.1.1.2                        25.0.0.25
3     225.1.1.3                        25.0.0.25
4     225.1.1.4                        25.0.0.25
5     225.1.1.5                        25.0.0.25
```

IP multicast PIM neighbor filter

The IP multicast PIM neighbor filter feature allows you to control which devices can be PIM neighbors.

When two PIM-enabled neighbor devices exchange Hello packets at regular intervals they become PIM neighbors by default. The IP multicast PIM neighbor filter feature gives you more control over which devices can be PIM neighbors by configuring the **ip pim neighbor-filter** command or **ipv6 pim neighbor-filter** command. You can configure the ACL to filter PIM Hello packets from sources you want to deny or allow, thereby controlling those devices' eligibility to become PIM neighbors.

FIGURE 6 Multicast PIM filter topology

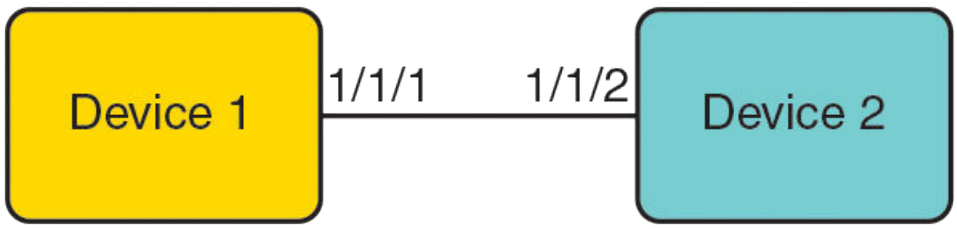

TABLE 4 Configurations for devices running IP multicast PIM filters

Device 1	Device 2

TABLE 4 Configurations for devices running IP multicast PIM filters (continued)

access-list 10 deny host 10.0.0.2 access-list 10 permit any interface ethernet 1/1/1 enable ip address 10.0.0.1/24 ip pim-sparse ip pim neighbor-filter 10	interface ethernet 1/1/2 enable ip address 10.0.0.2/24 ip pim-sparse

Limitations

ACLs deny all access by default and you must configure the **access-list permit** command to permit access to one or more devices. You can configure the **access-list permit all** command on an interface to permit traffic on the interface to pass through without filtering.

An interface can have only one ACL configured on it.

There are no checks to validate whether an ACL applies to an interface. If the interface has no ACL, a warning that no filtering can occur is displayed.

The IP multicast PIM neighbor filter feature supports a maximum of 128 PIM neighbor filters for both IPv4 and IPv6.

Precedence-value matching in extended-ACL configurations is not supported. Refer to the *FastIron Security Configuration Guide* for information on ACLs.

Configuring IPv4 PIM neighbor filtering

Configure an ACL and apply it to an interface to control neighbor access.

1. Configure an ACL named 10 to deny access to the device 10.10. 102.

   ```
   Device(config)#access-list 10 deny host 10.10.10.2
   ```

   You can identify the ACL by name as an ASCII string, by a number in the range 1 to 99 (for a standard ACL), or by a number in the range 100 to 199 (for an extended ACL).
2. Configure ACL 10 to permit access to all other devices.

   ```
   Device(config)#access-list 10 permit any
   ```

3. Configure an Ethernet interface.

   ```
   Device(config)#interface ethernet 1/3/2
   ```

   Configures an interface and enters interface configuration mode.
4. Configure a filter that applies ACL 10 to the interface.

   ```
   Device(config-if-e1000-1/3/2)#ip pim neighbor-filter 10
   ```

   Prevents the host that is specified in ACL 10, 10.10.10.2, from becoming a PIM neighbor on the interface.

PIM Passive

PIM Passive is used to reduce and minimize unnecessary PIM Hello and other PIM control messages.

PIM Passive allows you to specify that the interface is "passive" in regards to PIM. No PIM control packets are sent or processed (if received), but hosts can still send and receive multicast traffic and IGMP control traffic on the interface. Also, PIM Passive prevents any malicious router from taking over as the designated router (DR), which can prevent all hosts on the LAN from joining multicast traffic outside the LAN.

The following guidelines apply to PIM Passive:

- PIM Passive is a Layer 3 interface [Ethernet/VE] level feature.
- Because the loopback interfaces are never used to form PIM neighbors, PIM Passive is not supported on loopback interfaces.
- Both PIM SM and PIM DM modes support PIM Passive.
- Applying PIM Passive on an interface requires PIM to be enabled on the interface.
- The sent and received statistics of a PIM Hello message are not changed for an interface while it is configured as PIM passive.

To enable PIM Passive on an interface, enter the following commands:

```
device# configure terminal
device(config)# router pim
device(config-pim-router)# exit
device(config)# interface ethernet 2
device(config-if-e1000-2)# ip pim
device(config-if-e1000-2)# ip pim passive
device(config-if-e1000-2)# exit
device(config)# interface ve 2
device(config-vif-2)# ip pim-sparse
device(config-vif-2)# ip pim passive
device(config-vif-2)# exit
```

Syntax: [no] ip pim passive

Multicast Outgoing Interface (OIF) list optimization

Each multicast route entry maintains a list of outgoing interfaces (OIF List) to which an incoming multicast data packet matching the route is replicated. In hardware-forwarded route entries, these OIF lists are stored inside the hardware in replication tables which are limited in size. In many deployment scenarios, more than one multicast route can have identical OIF lists and can optimize usage of the replication table entries by sharing them across multiple multicast routes.

Multicast OIF list optimization keeps track of all the OIF lists in the system. It manages the hardware replication resources optimally, in real time, by dynamically assigning or re-assigning resources to multicast route entries to suit their current OIF list requirements, while maximizing resource sharing.

> **NOTE**
> IPv4 multicast routes do not share hardware replication table entries with IPv6 multicast routes even if they share the same OIF lists.

Displaying system values

To display default, maximum, current, and configured values for system maximum parameters, use the **show default values** command. The following output example does not show complete output; it shows only PIM hardware mcache values.

```
device(config)#show default values
System Parameters      Default    Maximum    Current    Configured
pim-hw-mcache          1024       6144       1500       1500
```

Displaying PIM resources

To display the hardware resource information, such as hardware allocation, availability, and limit for software data structure, enter the **show ip pim resource** command.

```
device# show ip pim resource
Global PIM Parameters :-
GLOBAL Ipv4 MULTICAST CLASS Size:16811 bytes
GLOBAL Ipv4 PIM CLASS Size:1065 bytes
MULTICAST IPV4 CLASS Num alloc:5, System max:129, Size:1228 bytes
PIM IPV4 CLASS  Num alloc:5, System max:129, Size:50440
 Vrf Instance : default-vrf
---------------------------------------
                      alloc in-use  avail get-fail    limit  get-mem  size init
NBR list                256      3    253        0      512        4    90  256
RP set list             256      4    252        0     1536     5032    43  256
Static RP                64      0     64        0       64        0    36   64
LIF Entry               512      0    512        0      512        0    41  512
Anycast RP               64      0     64        0       64        0   190   64
timer                   256      0    256        0    59392        4    64  256
prune                   128      0    128        0    29696        0    34  128
pimsm J/P elem         1024      0   1024        0    48960     1258    29 1024
Timer Data              256      1    255        0    59392        2    28  256
mcache SLIB Sync        280      0    280        0    64960       20    28  280
mcache                   56      2     54        0    12992        2   796   56
graft if no mcache      197      0    197        0    45704        0    64  197
HW replic vlan         2000      3   1997        0   464000        4    66 2000
HW replic port         1024      3   1021        0   237568        4    78 1024
pim/dvm intf. group     256      0    256        0    59392        0    24  256
pim/dvm global group    256      2    254        0    59392        2    46  256
repl entry(Global)     1024      0   1024        0   237568        4    43 1024
IGMP Resources(All Vrfs):
  groups                256      2    254        0     4096        2   210  256
  group-memberships     256      2    254        0     4096        2   142  256
  sources                56      1     55        0    12992      606    59   56
  client sources         56      0     56        0    12992        0    81   56
  ssm-map               256      0    256        0      256        0    18  256
  ssm-map-sources       256      0    256        0    59392        0  1024  256
Hardware-related Resources:
Total (S,G) entries 1
Total SW FWD entries 0
  Total sw w/Tag MVID entries 0
  Total sw w/Tag invalid MVID entries 0
Total HW FWD entries 1
  Total hw w/Tag MVID entries 0
  Total hw w/Tag invalid MVID entries 0
```

Syntax: show ip pim [**all-vrf** | [**vrf** *vrf-name*]] **resource**

The **vrf** parameter allows you to display hardware resource information for the VRF instance identified by the *vrf-name* variable.

The following table displays the output from the **show ip pim resource** command.

TABLE 5 Output from the show ip pim resource command

Field	Description
Num alloc	Number of VRF instances allocated.
System max	Maximum number of VRFs allowed in the system.
Size	Size of one instance of the resource in bytes.
alloc	Number of nodes of that data that are currently allocated in memory.
in-use	Number of allocated nodes in use.
avail	Number of allocated nodes are not in use.
get-fail	Number of allocation failures for this node.
limit	Maximum number of nodes that can be allocated for a data structure. This may or may not be configurable, depending on the data structure
get-mem	Number of successful allocations for this node.
size	Size of the node in bytes.
init	Number of nodes that are allocated during initialization time.

To display usage and fail-count information for SG entries on each VRF, use the **show ip pim all-vrf hw-resource** command.

```
device# show ip pim all-vrf hw-resource
              VRF  Usage     Fail
       default-vrf   3072        8
              blue   3072        0
   ------------------------------
       Total usage   6144

   System-max limit for SG entries: 6144
```

Syntax: show ip pim [**all-vrf** | [**vrf** *vrf-name*]] **hw-resource**

The **vrf** parameter allows you to display hardware resource information for the VRF instance identified by the *vrf-name* variable.

The following table displays the output from the **show ip pim all-vrf hw-resource** command.

TABLE 6 Output from the show ip pim all-vrf hw-resource command

Field	Description
VRF	Name of the VRF.
Usage	Number of allocated SG entries in this VRF.
Fail	Number of failures while allocating SG entries in this VRF (due to the system-max limit.
Total usage	Total number of SG entries in the system (all VRFs).
System-max limit for SG entries	Configured system limit for pim-hw-mcache.

Displaying PIM Sparse configuration information and statistics

You can display the following PIM Sparse information:

- Basic PIM Sparse configuration information
- Group information
- BSR information

- Candidate RP information
- RP-to-group mappings
- RP information for a PIM Sparse group
- RP set list
- PIM neighbor information
- The PIM flow cache
- The PIM multicast cache
- PIM traffic statistics
- PIM counter statistics

Displaying basic PIM Sparse configuration information

To display PIM Sparse configuration information, enter the following command at any CLI level.

```
Device(config)# show ip pim sparse

Global PIM Sparse Mode Settings
  Maximum Mcache         : 12992     Current Count              : 2
  Hello interval         : 30        Neighbor timeout           : 105
  Join/Prune interval    : 60        Inactivity interval        : 180
  Hardware Drop Enabled  : Yes       Prune Wait Interval        : 3
  Bootstrap Msg interval : 60        Candidate-RP Msg interval  : 60
  Register Suppress Time : 60        Register Probe Time        : 10
  Register Stop Delay    : 10        Register Suppress interval : 60
  SSM Enabled            : Yes       SPT Threshold              : 1
 SSM Group Range        : 232.0.0.0/8
 Route Precedence       : mc-non-default mc-default uc-non-default uc-default
```

Syntax: show ip pim [**vrf** *vrf-name*] **sparse**

The **vrf** keyword allows you to display PIM sparse configuration information for the VRF instance identified by the *vrf-name* variable.

This example shows the PIM Sparse configuration information on PIM Sparse device A in Figure 5 on page 90.

The following table shows the information displayed by the **show ip pim sparse** command.

TABLE 7 Output of the show ip pim sparse command

This field...	Displays...
Global PIM Sparse mode settings	
Maximum mcache	Maximum number of multicast cache entries.
Current Count	Number of multicast cache entries used.
Hello interval	How frequently the device sends IPIM Sparse hello messages to its PIM Sparse neighbors. This field shows the number of seconds between hello messages. PIM Sparse routers use hello messages to discover one another.
Neighbor timeout	Number of seconds the device waits for a hello message from a neighbor before determining that the neighbor is no longer present and is not removing cached PIM Sparse forwarding entries for the neighbor. Default is 105 seconds.

TABLE 7 Output of the show ip pim sparse command (continued)

This field...	Displays...
Join or Prune interval	How frequently the device sends IPv6 PIM Sparse Join or Prune messages for the multicast groups it is forwarding. This field shows the number of seconds between Join or Prune messages. The device sends Join or Prune messages on behalf of multicast receivers that want to join or leave an PIM Sparse group. When forwarding packets from PIM Sparse sources, the device sends the packets only on the interfaces on which it has received join requests in Join or Prune messages for the source group.
Inactivity interval	Number of seconds a forwarding entry can remain unused before the router deletes it. Default is 180 sec.
Hardware Drop Enabled	Indicates whether hardware drop is enabled or disabled. To prevent unwanted multicast traffic from being sent to the CPU, PIM Routing and Passive Multicast Route Insertion (PMRI) can be used together to ensure that multicast streams are only forwarded out ports with interested receivers and unwanted traffic is dropped in the hardware on Layer 3 Switches.
Prune Wait Interval	Number of seconds a PIM device waits before stopping traffic to neighbor devices that do not want the traffic. Range is from zero to three seconds. Default is three seconds.
Bootstrap Msg interval	How frequently the BSR configured on the device sends the RP set to the RPs within the PIM Sparse domain. The RP set is a list of candidate RPs and their group prefixes. The group prefix of a candidate RP indicates the range of PIM Sparse group numbers for which it can be an RP. **NOTE** This field contains a value only if an interface on the device is elected to be the BSR. Otherwise, the field is blank.
Candidate-RP Msg interval	Number of seconds the candidate RP configured on the Layer 3 switch sends candidate RP advertisement messages to the BSR. Default is 60 seconds.
Register Suppress Time	This is the mean interval between receiving a Register-Stop and allowing registers to be sent again. A lower value means more frequent register bursts at RP, while a higher value means longer join latency for new receivers. Default: 60 seconds.
Register Probe Time	Number of seconds the PIM router waits for a register-stop from an RP before it generates another NULL register to the PIM RP. Default is 10 seconds.
Register Stop Delay	Register stop message. Default is 10 seconds.
Register Suppress interval	Number of seconds that it takes the designated router to send a Register-encapsulated date to the RP after receiving a Register-Stop message. Default is 60 seconds.
SSM Enabled	If yes, Source-Specific Multicast is configured globally on this router.
SPT threshold	Number of packets the device sends using the path through the RP before switching to the SPT path. Default is 1 packet.
SSM Group Range	Source-Specific Multicast group range.

TABLE 7 Output of the show ip pim sparse command (continued)

This field...	Displays...
Route Precedence	The route precedence configured to control the selection of routes based on the four route types: • Non-default route from the mRTM • Default route from the mRTM • Non-default route from the uRTM • Default route from the uRTM

Displaying a list of multicast groups

To display PIM group information, enter the following command at any CLI level.

```
Device(config)# show ip pim group
Total number of groups for VRF default-vrf: 7
1    Group 226.0.34.0
     Group member at  e1/2/9:  v59
     Group member at  e1/1/16: v57
2    Group 226.0.77.0
     Group member at  e1/2/9:  v59
     Group member at  e1/1/16: v57
3    Group 226.0.120.0
     Group member at  e1/2/9:  v59
     Group member at  e1/1/16: v57
4    Group 226.0.163.0
     Group member at  e1/2/9:  v59
     Group member at  e1/1/16: v57
5    Group 226.0.206.0
     Group member at  e1/2/9:  v59
     Group member at  e1/16:   v57
6    Group 226.0.249.0
     Group member at  e1/2/9:  v59
     Group member at  e1/1/16: v57
7    Group 226.0.30.0
     Group member at  e1/2/9:  v59
     Group member at  e1/1/16: v57
device(config)#
```

Syntax: show ip pim [**vrf** *vrf-name*] **group**

The **vrf** keyword allows you to display PIM group information for the VRF instance identified by the *vrf-name* variable.

The following table describes the output from this command:

TABLE 8 Output from the show ip pim group command

This field...	Displays...
Total number of Groups	Lists the total number of IP multicast groups the device is forwarding. **NOTE** This list can include groups that are not PIM Sparse groups. If interfaces on the device are configured for regular PIM (dense mode), these groups are listed too.
Index	The index number of the table entry in the display.
Group	The multicast group address
Ports	The device ports connected to the receivers of the groups.

Displaying BSR information

To display BSR information, enter the following command at any CLI level.

```
device(config)# show ip pim bsr
PIMv2 Bootstrap information for Vrf Instance : default-vrf
------------------------------------------------------------------------------
  This system is the Elected BSR
  BSR address: 1.51.51.1. Hash Mask Length 32. Priority 255.
  Next bootstrap message in 00:01:00
  Configuration:
    Candidate loopback 2 (Address 1.51.51.1). Hash Mask Length 32. Priority 255.
Next Candidate-RP-advertisment in 00:01:00
  RP: 1.51.51.1
    group prefixes:
    224.0.0.0 / 4
  Candidate-RP-advertisement period: 60
```

This example shows information displayed on a device that has been elected as the BSR. The next example shows information displayed on a device that is not the BSR. Notice that some fields shown in the example above do not appear in the example below

```
device(config)#show ip pim bsr
PIMv2 Bootstrap information for Vrf Instance : default-vrf
------------------------------------------------------------------------------
  BSR address: 1.51.51.1. Hash Mask Length 32. Priority 255.
Next Candidate-RP-advertisment in 00:00:30
  RP: 1.51.51.3
    group prefixes:
    224.0.0.0 / 4
  Candidate-RP-advertisement period: 60
device(config)#
```

Syntax: show ip pim [**vrf** *vrf-name*] **bsr**

The **vrf** keyword allows you to display BSR information for the VRF instance identified by the *vrf-namevrf-name* variable.

The following table describes the output from this command.

TABLE 9 Output from the show ip pim bsr command

This field...	Displays...
BSR address	The IP address of the interface configured as the PIM Sparse Bootstrap Router (BSR).
BSR priority	The priority assigned to the interface for use during the BSR election process. During BSR election, the priorities of the candidate BSRs are compared and the interface with the highest BSR priority becomes the BSR.
Hash mask length	The number of significant bits in the IP multicast group comparison mask. This mask determines the IP multicast group numbers for which the device can be a BSR. The default is 32 bits, which allows the device to be a BSR for any valid IP multicast group number. **NOTE** This field appears only if this device is a candidate BSR.
Next bootstrap message in	Indicates how much time will pass before the BSR sends the next bootstrap message. The time is displayed in "hh:mm:ss" format. **NOTE** This field appears only if this device is the BSR.

TABLE 9 Output from the show ip pim bsr command (continued)

This field...	Displays...
Next Candidate-RP-advertisement message in	Indicates how much time will pass before the BSR sends the next candidate PR advertisement message. The time is displayed in "hh:mm:ss" format. **NOTE** This field appears only if this device is a candidate BSR.
RP	Indicates the IP address of the Rendezvous Point (RP). **NOTE** This field appears only if this device is a candidate BSR.
group prefixes	Indicates the multicast groups for which the RP listed by the previous field is a candidate RP. **NOTE** This field appears only if this device is a candidate BSR.
Candidate-RP-advertisement period	Indicates how frequently the BSR sends candidate RP advertisement messages. **NOTE** This field appears only if this device is a candidate BSR.

Displaying candidate RP information

To display candidate RP information, enter the following command at any CLI level.

```
device# show ip pim rp-candidate
Next Candidate-RP-advertisement in 00:00:10
  RP: 207.95.7.1
    group prefixes:
    224.0.0.0 / 4
  Candidate-RP-advertisement period: 60
```

This example show information displayed on a device that is a candidate RP. The next example shows the message displayed on a device that is not a candidate RP.

```
device# show ip pim rp-candidate
```

This system is not a Candidate-RP.

Syntax: show ip pim [**vrf** *vrf-name*] **rp-candidate**

This command displays candidate RP information for the VRF instance identified by the *vrf-name* variable.

The following table describes the output from this command.

TABLE 10 Output from the show ip pim rp-candidate command

This field...	Displays...
Candidate-RP-advertisement in	Indicates how time will pass before the BSR sends the next RP message. The time is displayed in "hh:mm:ss" format. **NOTE** This field appears only if this device is a candidate RP.

TABLE 10 Output from the show ip pim rp-candidate command (continued)

This field...	Displays...
RP	Indicates the IP address of the Rendezvous Point (RP). **NOTE** This field appears only if this device is a candidate RP.
group prefixes	Indicates the multicast groups for which the RP listed by the previous field is a candidate RP. **NOTE** This field appears only if this device is a candidate RP.
Candidate-RP-advertisement period	Indicates how frequently the BSR sends candidate RP advertisement messages. **NOTE** This field appears only if this device is a candidate RP.

Displaying RP-to-group mappings

To display RP-to-group-mappings, enter the following command at any CLI level.

```
device# show ip pim rp-map
Number of group-to-RP mappings: 6
Group address        RP address
------------------------------
1 239.255.163.1  99.99.99.5
2 239.255.163.2  99.99.99.5
3 239.255.163.3  99.99.99.5
4 239.255.162.1  99.99.99.5
5 239.255.162.2  43.43.43.1
6 239.255.162.3  99.99.99.5
```

Syntax: show ip pim [**vrf** *vrf-name*] **rp-map**

The **vrf** option allows you to display candidate RP-to-group mappings for the VRF instance identified by the *vrf-name* variable.

The following table describes the output from this command.

TABLE 11 Output of the show ip pim rp-map command

This field...	Displays...
Group address	Indicates the PIM Sparse multicast group address using the listed RP.
RP address	Indicates the IP address of the Rendezvous Point (RP) for the listed PIM Sparse group.

Displaying RP Information for a PIM Sparse group

To display RP information for a PIM Sparse group, enter the following command at any CLI level.

```
device# show ip pim rp-hash 239.255.162.1
  RP: 207.95.7.1, v2
    Info source: 207.95.7.1, via bootstrap
```

Syntax: show ip pim [**vrf** *vrf-name*] **rp-hash** *group-addr*

The **vrf** option allows you to display RP information for the VRF instance identified by the *vrf-name* variable.

The *group-addr* parameter is the address of a PIM Sparse IP multicast group.

The following table describes the output from this command.

TABLE 12 Output from the show ip pim command

This field...	Displays...
RP	Indicates the IP address of the Rendezvous Point (RP) for the specified PIM Sparse group.
Info source	Indicates the source of the RP information. It can be a static-RP configuration or learned via the bootstrap router. If RP information is learned from the boot strap, the BSR IP address is also displayed.

Displaying the RP set list

To display the RP set list for the device elected as BSR, enter the following command at any CLI level.

```
device(config)# show ip pim rp-set
Static RP
---------
Static RP count: 2
1.51.51.4
1.51.51.5
Number of group prefixes Learnt from BSR: 1
Group prefix = 224.0.0.0/4      # RPs: 2
      RP 1: 1.51.51.1    priority=0    age=60    holdtime=150
      RP 2: 1.51.51.3    priority=0    age=30    holdtime=150
```

To display the RP set list for devices that are not elected as BSR, enter the following command at any CLI level.

```
device(config)# show ip pim rp-set
Static RP
---------
Static RP count: 2
1.51.51.4
1.51.51.5
Number of group prefixes Learnt from BSR: 1
Group prefix = 224.0.0.0/4      # RPs expected: 2
      # RPs received: 2
      RP 1: 1.51.51.1    priority=0    age=60    holdtime=150
      RP 2: 1.51.51.3    priority=0    age=30    holdtime=150
```

Syntax: show ip pim [**vrf** *vrf-name*] **rp-set**

The **vrf** option allows you to display the RP set list for the VRF instance identified by the *vrf-name* variable.

The following table describes the output from this command.

TABLE 13 Output from the show ip pim vrf rp-set command

This field...	Displays...
Number of group prefixes	The number of PIM Sparse group prefixes for which the RP is responsible.
Group prefix	Indicates the multicast groups for which the RP listed by the previous field is a candidate RP.
RPs expected or received	Indicates how many RPs were expected and received in the latest bootstrap message.
RP *num*	Indicates the RP number. If there are multiple RPs in the PIM Sparse domain, a line of information for each RP is listed, in ascending numerical order.
priority	The RP priority of the candidate RP. During the election process, the candidate RP with the highest priority is elected as the RP.
age	The age (in seconds) of this RP-set.

TABLE 13 Output from the show ip pim vrf rp-set command (continued)

This field...	Displays...
holdtime	Indicates the time in seconds for which this rp-set information is valid. If this rp-set information is not received from BSR within the holdtime period, the rp-set information is aged out and deleted.

Displaying multicast neighbor information

To display information about PIM neighbors, enter the following command at any CLI level.

```
device(config)# show ip pim nbr
--------+--------+---------------+--------+---+---------+---------+-----+----------------+-----------+----+
Port    |PhyPort |Neighbor       |Holdtime|T  |PropDelay|Override |Age  |UpTime          |VRF        |Prio
        |        |               |sec     |Bit|msec     |msec     |sec  |                |           |
--------+--------+---------------+--------+---+---------+---------+-----+----------------+-----------+----+
v2       e1/1/1     2.1.1.2         105     1   500       3000      0     00:44:10         default-vrf 1
v4       e1/2/2     4.1.1.2         105     1   500       3000      10    00:42:50         default-vrf 1
v5       e1/1/4     5.1.1.2         105     1   500       3000      0     00:44:00         default-vrf 1
v22      e1/1/1     22.1.1.1        105     1   500       3000      0     00:44:10         default-vrf 1
Total Number of Neighbors : 4
device(config)#
```

Syntax: show ip pim [**vrf** *vrf-name*] **neighbor**

The **vrf** option allows you to display information about the PIM neighbors for the VRF instance identified by the *vrf-name* variable.

The following table describes the output from this command.

TABLE 14 Output from the show ip pim vrf neighbor command

This field...	Displays...
Port	The interface through which the device is connected to the neighbor.
Phyport	When there is a virtual interface, this is the physical port to which the neighbor is connected.
Neighbor	The IP interface of the PIM neighbor.
Holdtime sec	Indicates how many seconds the neighbor wants this device to hold the entry for this neighbor in memory. The neighbor sends the Hold Time in Hello packets: • If the device receives a new Hello packet before the Hold Time received in the previous packet expires, the device updates its table entry for the neighbor. • If the device does not receive a new Hello packet from the neighbor before the Hold time expires, the device assumes the neighbor is no longer available and removes the entry for the neighbor.
Age sec	The number of seconds since the device received the last hello message from the neighbor.
UpTime sec	The number of seconds the PIM neighbor has been up. This timer starts when the device receives the first Hello messages from the neighbor.
VRF	The VRF in which the interface is configured. This can be a VRF that the port was assigned to or the default VRF of the device.
Priority	The DR priority that is used in the DR election process. This can be a configured value or the default value of 1.

Displaying the PIM multicast cache

To display the PIM multicast cache, enter the following command at any CLI level.

```
device(config)# show ip pim mcache 10.140.140.14 230.1.1.9
IP Multicast Mcache Table
Entry Flags : SM - Sparse Mode, SSM - Source Specific Multicast, DM - Dense Mode
     RPT - RPT Bit, SPT - SPT Bit, LSRC - Local Source, LRCV - Local Receiver
     HW - HW Forwarding Enabled, FAST - Resource Allocated, TAG - Need For Replication Entry
     REGPROB - Register In Progress, REGSUPP - Register Suppression Timer
     MSDPADV - Advertise MSDP, NEEDRTE - Route Required for Src/RP, PRUN - DM Prune Upstream
Interface Flags: IM - Immediate, IH - Inherited, WA - Won Assert
     MJ - Membership Join, MI - Membership Include, ME - Membership Exclude
     BR - Blocked RPT, BA - Blocked Assert, BF - Blocked Filter, BI - Blocked IIF
Total entries in mcache: 20
1 (10.140.140.14, 230.1.1.9) in v1001 (tag e1/4/29), Uptime 00:03:12
  upstream neighbor 10.11.11.13
  Flags (0x600680e1) SM SPT LRCV HW FAST TAG
  fast ports: ethe 1/4/29 ethe 1/5/2
  AgeSltMsk: 1, L2 FID: 8188, DIT: 8 , AvgRate: 0, profile: none
  Forwarding_oif: 3, Immediate_oif: 0, Blocked_oif: 0
  L3 (HW) 2:
  e1/4/29(VL13), 00:03:12/0, Flags: MJ
  e1/5/2(VL1004), 00:03:12/0, Flags: MJ
  L2 (HW) 1:
  e1/5/2, 00:00:07/0, Flags: MJ
  L2 MASK: ethe 1/5/2
  Src-Vlan: 1001
```

Syntax: show ip pim [**vrf** *vrf-name*] **mcache** [*source-address* | *group-address* | **counts** | **dense** | **dit-idx** *dit-idx* | **g_entries** | **receiver** | **sg_entries** | **sparse** | **ssm**]

The **vrf** option allows you to display the PIM multicast cache for the VRF instance identified by the *vrf-name* variable.

The *source-address* parameter selects the multicast cache source address.

The *group-address* parameter selects the multicast cache group address.

The **counts** keyword indicates the count of entries.

The **dense** keyword displays only the PIM Dense Mode entries.

The *dit-idx* variable allows you to display all entries that match a specified dit.

The **g_entries** keyword displays only the (*, G) entries.

The **receiver** keyword allows you to display all entries that egress a specified interface.

The **sg_entries** keyword displays only the (S, G) entries.

The **sparse** keyword displays only the PIM Sparse Mode entries.

The **ssm** keyword displays only the SSM entries.

The following table describes the output from this command.

TABLE 15 Output fields from the show ip pim mcache command

Field	Description
Total entries in mcache	Shows the total number of PIM mcache entries
MJ	Membership Join
MI	Membership Include
ME	Membership Exclude - Legend for the mcache entry printed once per page, it gives the explanation of each of the flags used in the entry.
BR	Blocked RPT

TABLE 15 Output fields from the show ip pim mcache command (continued)

Field	Description
BA	Blocked Assert
BF	Blocked Filter
BI	Blocked IIF
Uptime	Shows the entry uptime
upstream neighbor	Shows the upstream neighbor for the Source/RP based on the type of entry. For (*,G) it shows the upstream neighbor towards the RP. For (S,G) entries it shows the upstream neighbor towards the source.
Flags	Flags Represent Entry flags in hex format in the braces. And indicates the meaning of the flags set in abbreviated string whose explanations are as below. Only shows the flags which are set. SM - Shows If the entry is created by PIM Sparse Mode DM - Shows If DM mode entry is enabled SSM - Shows If the SSM mode entry is enabled RPT - Shows If the entry is on the Rendezvous Point (RP) SPT - Shows If the entry is on the source tree LSRC - Shows If the source is in a directly-connected interface LRcv - Shows If the receiver is directly connected to the router REG - if the data registration is in progress L2REG - if the source is directly connected to the router REGSUPP - if the register suppression timer is running RegProbe HW - Shows If the candidate for hardware forwarding is enabled FAST - Shows If the resources are allocated for hardware forwarding TAG - Shows If there is a need for allocating entries from the replication table MSDPADV - Shows If RP is responsible for the source and must be advertised to its peers. NEEDRTE - Shows If there is no route to the source and RP is available PRUNE - Shows If PIM DM Prune to upstream is required
RP	Show the IP address of the RP.
fast ports	Shows forwarding port mask.
AgeSltMsk	Shows the slot number on which active module expects ingress traffic.
L2 FID	Shows the hardware resource allocated for the traffic switched to receivers in the ingress VLAN.
DIT	Shows the hardware resource allocated for routed receivers.
RegPkt	Shows Count of Packets forwarded due to the Register decapsulation.
AvgRate	Shows the average Rate of packets ingressing for this entry over 30 seconds.
Profile	Shows the Profile ID associated with the Stream.
Number of matching entries	Shows the total number of mcache entries matching a particular multicast filter specified.

TABLE 15 Output fields from the show ip pim mcache command (continued)

Field	Description
Outgoing interfaces Section	This section consists of three parts. L3 OIFs, L2OIFs and Blocked OIFs. And each section has Format of L3/L2/Blocked followed by (HW/SW) followed by count of the number of OIF in each section. Additionally, each section displays the OIFs one per line. And shows the OIF in the format eth/Tr(Vlan) followed by uptime/expiry time, followed by the Flags associated with each OIF.
L3	Shows whether the traffic is routed out of the interface.
L2	Shows whether the traffic is switched out of the interface.
HW	Shows whether the entry is hardware forwarded.
SW	Shows whether the entry is software forwarded
Eth/Tr(VL1)	Shows the outgoing interface on the specified VLAN.
Flags (explanation of flags in the OIF section)	Shows the flags set in each of the Outgoing interface in abbreviated string format whose explanations are as below. Legend of this shown at the top of each entry IM - Immediate IH - Inherited MJ - Membership Join MI - Membership Include ME - Membership Exclude BR - Blocked due to SG RPT BA - Blocked due to Assert BF - Blocked due to Filter BI - Blocked IIF (Incoming interface) matches OIF
Src-Vlan	Shows the VLAN associated with the ingress interface.
MCTPEERF - Traffic Forw By Cluster Peer CCEP	Applies only to Layer 3 multicast routing over MCT. This means multicast traffic for this stream is forwarded by cluster peer [remote] CCEP port because of flow load balancing

Displaying the PIM multicast cache for DIT

To display the PIM multicast cache for a specified dit, enter the following command at any CLI level.

```
device#show ip pim mcache dit-idx 2
IP Multicast Mcache Table
Entry Flags    : SM  - Sparse Mode, SSM - Source Specific Multicast, DM - Dense Mode
                 RPT    - RPT Bit, SPT - SPT Bit, LSRC - Local Source, LRCV - Local Receiver
                 HW - HW Forwarding Enabled, FAST - Resource Allocated, TAG - Need For Replication Entry
                 REGPROB - Register In Progress, REGSUPP - Register Suppression Timer
                 MSDPADV - Advertise MSDP, NEEDRTE - Route Required for Src/RP,  PRUN - DM Prune Upstream
Interface Flags: IM - Immediate, IH - Inherited, WA - Won Assert
                 MJ - Membership Join, MI - Membership Include, ME - Membership Exclude
                 BR - Blocked RPT, BA - Blocked Assert, BF - Blocked Filter, BI - Blocked IIF
Total entries in mcache: 30
1     (20.20.20.100, 225.1.1.1) in v220 (tag e1/1/13), Uptime 07:12:07
      upstream neighbor 220.220.220.1
      Flags (0x200680e1) SM SPT LRCV HW FAST TAG
      fast ports: ethe 1/1/11
      AgeSltMsk: 1,  L2 FID: 105c,  DIT:     2 , AvgRate: 0, profile: none
      Forwarding_oif: 1, Immediate_oif: 0, Blocked_oif: 0
      L3 (HW) 1:
          e1/1/11(VL40), 07:12:07/0, Flags: MJ
```

```
      Src-Vlan: 220
2     (20.20.20.100, 225.1.1.2) in v220 (tag e1/1/13), Uptime 00:01:00
      upstream neighbor 220.220.220.1
      Flags (0x200680e1) SM SPT LRCV HW FAST TAG
      fast ports: ethe 1/1/11
      AgeSltMsk: 1, L2 FID: 105c,  DIT:     2 , AvgRate: 0, profile: none
      Forwarding_oif: 1, Immediate_oif: 0, Blocked_oif: 0
      L3 (HW) 1:
          e1/1/11(VL40), 00:01:00/0, Flags: MJ
      Src-Vlan: 220
3     (20.20.20.100, 225.1.1.3) in v220 (tag e1/1/13), Uptime 00:01:00
      upstream neighbor 220.220.220.1
      Flags (0x200680e1) SM SPT LRCV HW FAST TAG
      fast ports: ethe 1/1/11
      AgeSltMsk: 1, L2 FID: 105c,  DIT:     2 , AvgRate: 0, profile: none
      Forwarding_oif: 1, Immediate_oif: 0, Blocked_oif: 0
      L3 (HW) 1:
          e1/1/11(VL40), 00:01:00/0, Flags: MJ
      Src-Vlan: 220
```

Syntax: show ip pim [**vrf** *vrf-name*] **mcache dit-idx** *dit*

The *dit* variable allows you to display an entry that matches a specified dit.

Clearing the PIM forwarding cache

You can clear the PIM forwarding cache using the following command.

```
device# clear ip pim cache
```

Syntax: clear ip pim [**vrf** *vrf-name*] **cache**

Use the **vrf** option to clear the PIM forwarding cache for a VRF instance specified by the *vrf-name* variable.

Displaying PIM traffic statistics

To display PIM traffic statistics, enter the following command at any CLI level.

```
device(config)# show ip pim traffic
Port    HELLO     JOIN-PRUNE  ASSERT    REGISTER  REGISTER  BOOTSTRAP CAND. RP  Err
                                        GRAFT(DM) STOP(SM)  MSGS (SM) ADV. (SM)
-------+---------+-----------+---------+---------+---------+---------+---------+---
       Rx        Rx          Rx        Rx        Rx        Rx        Rx        Rx
------+---------+-----------+---------+---------+---------+---------+---------+---
v30     0         0           0         0         0         0         0         0
v50     2526      1260        0         0         0         1263      0         0
v150    2531      0           0         0         0         1263      0         0
v200    2531      0           0         0         0         1         0         0
Port    HELLO     JOIN-PRUNE  ASSERT    REGISTER  REGISTER  BOOTSTRAP CAND. RP  Err
                                        GRAFT(DM) STOP(SM)  MSGS (SM) ADV. (SM)
-------+---------+-----------+---------+---------+---------+---------+---------+---
       Tx        Tx          Tx        Tx        Tx        Tx        Tx
------+---------+-----------+---------+---------+---------+---------+---------+---
v30     2528      0           0         0         0         0         0
v50     2540      1263        0         0         0         2         0
v150    2529      0           0         0         0         1262      0
v200    2529      0           0         0         0         1262      0
device#show ip pim traffic rx
Port    HELLO     JOIN-PRUNE  ASSERT    REGISTER  REGISTER  BOOTSTRAP CAND. RP  Err
                                        GRAFT(DM) STOP(SM)  MSGS (SM) ADV. (SM)
-------+---------+-----------+---------+---------+---------+---------+---------+---
       Rx        Rx          Rx        Rx        Rx        Rx        Rx        Rx
------+---------+-----------+---------+---------+---------+---------+---------+---
v30     0         0           0         0         0         0         0         0
```

```
v50     2526      1260        0         0         0         1263      0         0
v150    2531      0           0         0         0         1263      0         0
v200    2531      0           0         0         0         1         0         0
device#show ip pim traffic tx
Port    HELLO     JOIN-PRUNE  ASSERT    REGISTER  REGISTER  BOOTSTRAP CAND. RP  Err
                                        GRAFT(DM) STOP(SM)  MSGS (SM) ADV. (SM)
-------+---------+-----------+---------+---------+---------+---------+---------+---
       Tx        Tx          Tx        Tx        Tx        Tx        Tx
------+---------+-----------+---------+---------+---------+---------+---------+---
v30     2528      0           0         0         0         0         0
v50     2540      1263        0         0         0         2         0
v150    2529      0           0         0         0         1262      0
v200    2530      0           0         0         0         1262      0
device#show ip pim traffic join-prune
Port  Packet    Join      Prune     Avg Aggr  Last Aggr
-----+---------+---------+---------+---------+----------
      Rx        Rx        Rx        Rx        Rx
-----+---------+---------+---------+---------+----------
v30   0         0         0         0         0
v50   1260      1260      0         1         1
v150  0         0         0         0         0
v200  0         0         0         0         0
Port  Packet    Join      Prune     Avg Aggr  Last Aggr
-----+---------+---------+---------+---------+----------
      Tx        Tx        Tx        Tx        Tx
-----+---------+---------+---------+---------+----------
v30   0         0         0         0         0
v50   1263      1262      1         1         1
v150  0         0         0         0         0
v200  0         0         0         0         0
device#show ip pim traffic join-prune  rx
Port  Packet    Join      Prune     Avg Aggr  Last Aggr
-----+---------+---------+---------+---------+----------
      Rx        Rx        Rx        Rx        Rx
-----+---------+---------+---------+---------+----------
v30   0         0         0         0         0
v50   1260      1260      0         1         1
v150  0         0         0         0         0
v200  0         0         0         0         0
device#show ip pim traffic join-prune  tx
Port  Packet    Join      Prune     Avg Aggr  Last Aggr
-----+---------+---------+---------+---------+----------
      Tx        Tx        Tx        Tx        Tx
-----+---------+---------+---------+---------+----------
v30   0         0         0         0         0
v50   1264      1263      1         1         1
v150  0         0         0         0         0
v200  0         0         0         0         0
```

Syntax: show ip pim [**vrf** *vrf-name*] **traffic** [**join-prune** | **rx** | **tx**]

- **vrf** --PIM traffic statistics for the VRF instance identified by *vrf-name*
- **join-prune** --Join/prune statistics.
- **rx** --Received PIM traffic statistics.
- **tx** --Transmitted PIM traffic statistics.

NOTE
If you have configured interfaces for standard PIM (dense mode) on the device, statistics for these interfaces are listed first by the display.

The following table describes the output for this show command.

TABLE 16 Output from the show ip pim vrf traffic command

This field...	Displays...
Port	The port or virtual interface on which the PIM interface is configured.

TABLE 16 Output from the show ip pim vrf traffic command (continued)

This field...	Displays...
Hello	The number of PIM Hello messages sent or received on the interface.
J or P	The number of Join or Prune messages sent or received on the interface. **NOTE** Unlike PIM dense, PIM Sparse uses the same messages for Joins and Prunes.
Register	The number of Register messages sent or received on the interface.
RegStop	The number of Register Stop messages sent or received on the interface.
Assert	The number of Assert messages sent or received on the interface.
Total Recv or Xmit	The total number of IGMP messages sent and received by the device.
Total Discard or chksum	The total number of IGMP messages discarded, including a separate counter for those that failed the checksum comparison.

Clearing the PIM message counters

You can clear the PIM message counters using the following command.

```
device# clear ip pim traffic
```

Syntax: clear ip pim [**vrf** *vrf-name*] **traffic**

Use the **vrf** option to clear the PIM message counters for a VRF instance specified by the *vrf-name* variable.

Displaying PIM RPF

The **show ip pim rfp** command displays what PIM sees as the reverse path to the source as shown in the following. While there may be multiple routes back to the source, the one displayed by this command is the one that PIM thinks is best.

```
device# show ip pim vrf eng rpf 130.50.11.10
Source 130.50.11.10 directly connected on e4/1
```

Syntax: show ip pim [**vrf** *vrf-name*] **rpf** *ip-address*

The *ip-address* variable specifies the source address for RPF check.

The **vrf** option to display what PIM sees as the reverse path to the source for a VRF instance specified by the *vrf-name* variable.

Configuring Multicast Source Discovery Protocol

The Multicast Source Discovery Protocol (MSDP) is used by Protocol Independent Multicast (PIM) Sparse devices to exchange source information across PIM Sparse domains. Devices running MSDP can discover PIM Sparse sources in other PIM Sparse domains.

The following figure shows an example of some PIM Sparse domains. For simplicity, this example shows one Designated Router (DR), one group source, and one receiver for the group. Only one PIM Sparse device within each domain needs to run MSDP.

FIGURE 7 PIM Sparse domains joined by MSDP devices

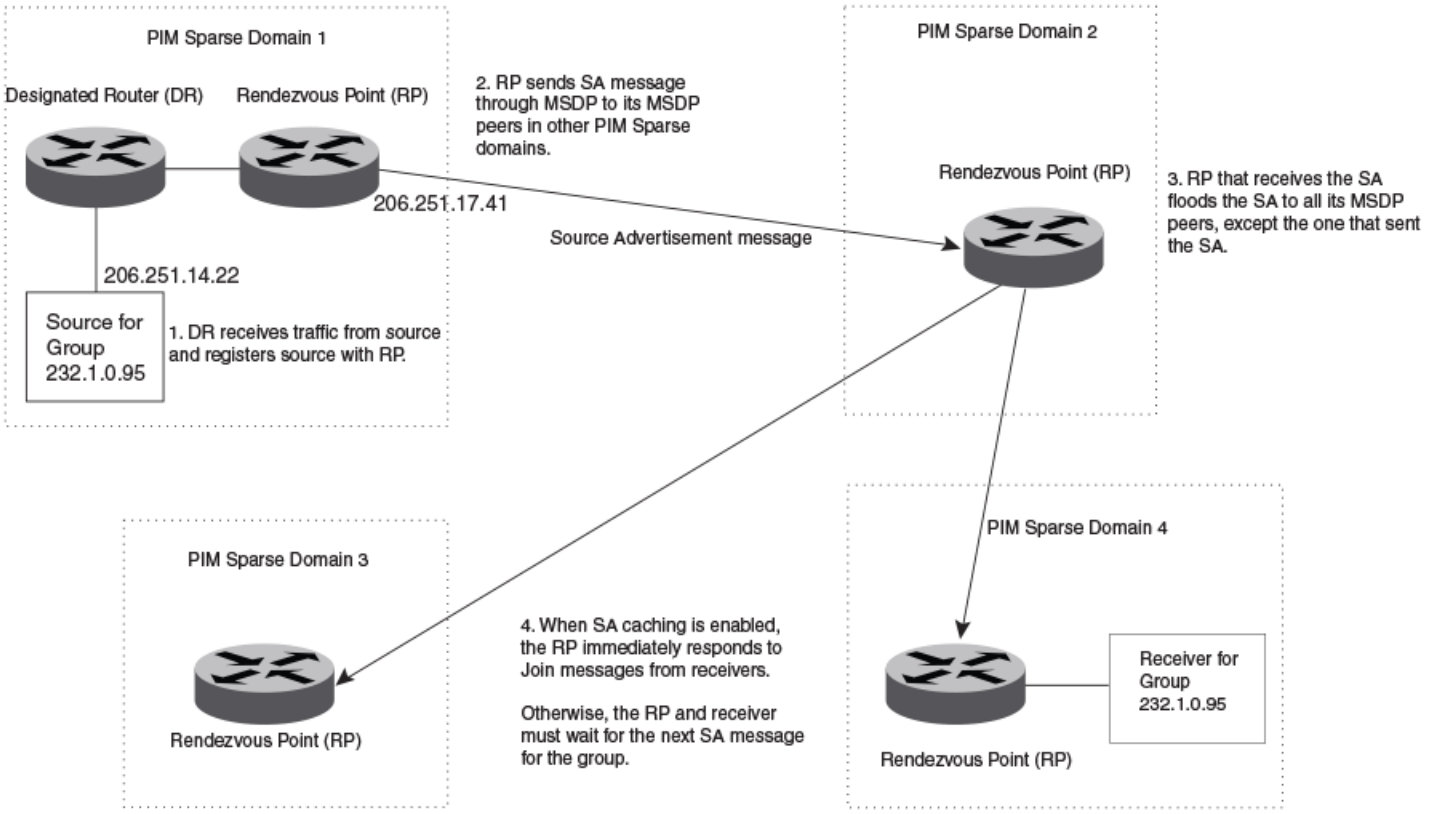

In this example, the source for PIM Sparse multicast group 232.0.1.95 is in PIM Sparse domain 1. The source sends a packet for the group to its directly attached DR. The DR sends a PIM register message for this flow to the RPDR. The RP is configured for MSDP, which enables the RP to exchange source information with other PIM Sparse domains by communicating with RPs in other domains that are running MSDP.

The RP sends the source information to each peer through a Source Active message. The message contains the IP address of the source, the group address to which the source is sending, and the IP address of the RP.

In this example, the Source Active message contains the following information:

- Source address: 206.251.14.22
- Group address: 232.1.0.95
- RP address: 206.251.17.41

Figure 7 shows only one peer for the MSDP device (which is also the RP here) in domain 1, so the Source Active message goes to only that peer. When an MSDP device has multiple peers, it sends a Source Active message to each of those peers. Each peer sends the Source Advertisement to other MSDP peers. The RP that receives the Source Active message also sends a Join message to the source if the RP that received the message has receivers for the group and source.

Peer Reverse Path Forwarding flooding

When the MSDP device (also the RP) in domain 2 receives the Source Active message from the peer in domain 1, the MSDP device in domain 2 forwards the message to all other peers. This propagation process is sometimes called "peer Reverse Path Forwarding (RPF) flooding". In Figure 7 on page 115, the MSDP device floods the Source Active message it receives from the peer in domain 1 to peers in domains 3 and 4.

The MSDP device in domain 2 does not forward the Source Active back to the peer in domain 1, because that is the peer from which the device received the message. An MSDP device never sends a Source Active message back to the peer that sent it. The peer that sent the message is sometimes called the "RPF peer". The MSDP device uses the unicast routing table for its Exterior Gateway Protocol (EGP) to identify the RPF peer by looking for the route entry that is the next hop toward the source. Often, the EGP protocol is Border Gateway Protocol (BGP) version 4.

NOTE
MSDP depends on BGP for inter-domain operations.

The MSDP routers in domains 3 and 4 also forward the Source Active message to all peers except the ones that sent them the message. Figure 7 on page 115 does not show additional peers.

Source Active caching

When an MSDP device that is also an RP receives a Source Active message, it checks the PIM sparse multicast group table for receivers for that group. If there are receivers for that group being advertised in the Source Active message, the RP sends a Join message towards the source.

In Figure 7 on page 115, if the MSDP device and RP in domain 4 has a table entry for the receiver, the RP sends a Join message on behalf of the receiver back through the RPF tree to the source, in this case the source in domain 1.

Source Active caching is enabled in MSDP on Ruckus devices. The RP caches the Source Active messages it receives even if the RP does not have a receiver for the group. Once a receiver arrives, the RP can then send a Join to the cached source immediately.

The size of the cache used to store MSDP Source Active messages is 4K. MSDP SA cache size can be configured using the **system-max msdp-sa-cache** command. The default value is 4K; the range is 1K to 8K.

Configuring MSDP

To configure MSDP, perform the following tasks:

- Enable MSDP.
- Configure the MSDP peers.

NOTE
The PIM Sparse Rendezvous Point (RP) is also an MSDP peer.

NOTE
Devices that run MSDP usually also run BGP. The source address used by the MSDP device is normally configured to be the same source address used by BGP.

Enabling MSDP

To enable MSDP, enter the following command.

```
device(config)# router msdp
```

Syntax: [no] router msdp

Enabling MSDP for a specified VRF

The **vrf** parameter allows you to configure MSDP on the virtual routing instance (VRF) specified by the *vrf-name* variable. All MSDP parameters available for the default router instance are configurable for a VRF-based MSDP instance.

To enable MSDP for the VRF named "blue", enter the following commands.

```
device(config)# router msdp vrf blue
device(config-msdp-router-vrf-blue)
```

Syntax: [no] router msdp [**vrf** *vrf-name*]

The **vrf** parameter allows you to configure MSDP on the virtual routing instance (VRF) specified by the *vrf-name* variable.

Entering the **no router msdp vrf** command removes the MSDP configuration from the specified VRF only.

Configuring MSDP peers

To configure an MSDP peer, enter a command such as the following at the MSDP configuration level.

```
device(config-msdp-router)# msdp-peer 205.216.162.1
```

To configure an MSDP peer on a VRF, enter the following commands at the MSDP VRF configuration level.

```
device(config)# router msdp vrf blue
device(config-msdp-router-vrf-blue)# msdp-peer 205.216.162.1
```

Syntax: [no] msdp-peer *ip-addr* [**connect-source loopback** *num*]

The *ip-addr* parameter specifies the IP address of the neighbor.

The **connect-source loopback** *num* parameter specifies the loopback interface you want to use as the source for sessions with the neighbor and must be reachable within the VRF.

> **NOTE**
> It is strongly recommended that you use the connect-source loopback *num* parameter when issuing the **msdp-peer** command. If you do not use this parameter, the device uses the IP address of the outgoing interface. You should also make sure the IP address of the connect-source loopback is the source IP address used by the PIM-RP, and the BGP device.

The commands in the following example add an MSDP neighbor and specify a loopback interface as the source interface for sessions with the neighbor. By default, the device uses the subnet address configured on the physical interface where you configure the neighbor as the source address for sessions with the neighbor.

```
device(config)# interface loopback 1
device(config-lbif-1)# ip address 9.9.9.9/32
device(config)# router msdp
device(config-msdp-router)# msdp-peer 2.2.2.99 connect-source loopback 1
```

Disabling an MSDP peer

To disable an MSDP peer, enter the following command at the configure MSDP router level.

```
device(config-msdp-router)# msdp-peer 205.216.162.1 shutdown
```

To disable the MSDP VRF peer named "blue", enter the following commands.

```
device(config)# router msdp vrf blue
device(config-msdp-router-vrf-blue)# no msdp-peer 205.216.162.1
```

Syntax: [no] msdp-peer *ip-addr* **shutdown**

The *ip-addr* parameter specifies the IP address of the MSDP peer that you want to disable.

Designating the interface IP address as the RP IP address

When an RP receives a Source Active message, it checks its PIM Sparse multicast group table for receivers for the group. If a receiver exists the RP sends a Join to the source.

By default, the IP address included in the RP address field of the SA message is the IP address of the originating RP. An SA message can use the IP address of any interface on the originating RP. (The interface is usually a loopback interface.)

To designate an interface IP address to be the IP address of the RP, enter commands such as the following.

```
device(config)# interface loopback 2
device(config-lbif-2)# ip address 2.2.1.99/32
device(config)# router msdp
device(config-msdp-router)# originator-id loopback 2
device(config-msdp-router)# exit
```

To specify VRF information, enter the following commands at the MSDP VRF configuration level.

```
device(config)# interface loopback 2
device(config-lbif-2)# ip address 2.2.1.99/32
device(config)# router msdp vrf blue
device(config-msdp-router-vrf blue)# originator-id loopback 2
device(config-msdp-router-vrf blue)# exit
```

Syntax: [no] originator-id *type number*

The **originator-id** command instructs MSDP to use the specified interface IP address as the IP address of the RP in an SA message. This address must be the address of the interface used to connect the RP to the source. The default address used is the RP IP address.

The *type* parameter indicates the type of interface used by the RP. Ethernet, loopback and virtual routing interfaces (ve) can be used.

The *number* parameter specifies the interface number (for example: loopback number, port number or virtual routing interface number.)

Filtering MSDP source-group pairs

You can filter individual source-group pairs in MSDP Source-Active messages:

- **sa-filter in** - Filters source-group pairs received in Source-Active messages from an MSDP neighbor.
- **sa-filter originate** - Filters self-originated source-group pairs in outbound Source-Active messages sent to an MSDP neighbor
- **sa-filter out** - Filters self-originated and forwarded source-group pairs in outbound Source-Active messages sent to an MSDP neighbor

Filtering incoming and outgoing Source-Active messages

The following example configures filters for incoming Source-Active messages from three MSDP neighbors:

- For peer 2.2.2.99, all source-group pairs in Source-Active messages from the neighbor are filtered (dropped).
- For peer 2.2.2.97, all source-group pairs except those with source address matching 10.x.x.x and group address of 235.10.10.1 are permitted.
- For peer 2.2.2.96, all source-group pairs except those associated with RP 2.2.42.3 are permitted.

To configure filters for incoming Source-Active messages, enter commands at the MSDP VRF configuration level.

To configure filters for outbound Source-Active messages, enter the optional **out** keyword.

The following commands configure extended ACLs. The ACLs will be used in route maps, which will be used by the Source-Active filters.

```
device(config)# access-list 123 permit ip 10.0.0.0 0.255.255.255 host 235.10.10.1
device(config)# access-list 124 permit ip host 2.2.42.3 any
device(config)# access-list 125 permit ip any any
```

The following commands configure the route maps.

```
device(config)# route-map msdp_map deny 1
device(config-routemap msdp_map)# match ip address 123
device(config-routemap msdp_map)# exit
device(config)# route-map msdp_map permit 2
device(config-routemap msdp_map)# match ip address 125
device(config-routemap msdp_map)# exit
device(config)# route-map msdp2_map permit 1
device(config-routemap msdp2_map)# match ip address 125
device(config-routemap msdp2_map)# exit
device(config)# route-map msdp2_rp_map deny 1
device(config-routemap msdp2_rp_map)# match ip route-source 124
device(config-routemap msdp2_rp_map)# exit
device(config)# route-map msdp2_rp_map permit 2
device(config-routemap msdp2_rp_map)# match ip route-source 125
device(config-routemap msdp2_rp_map)# exit
```

The following commands configure the Source-Active filters.

To specify VRF information, enter the following commands at the MSDP VRF configuration level.

```
device(config)# router msdp vrf blue
device(config-msdp-router-vrf blue)# sa-filter in 2.2.2.99
device(config-msdp-router-vrf blue)# sa-filter in 2.2.2.97 route-map msdp_map
device(config-msdp-router-vrf blue)# sa-filter in 2.2.2.96 route-map msdp2_map rp-route-map msdp2_rp_map
```

The **sa-filter** commands configure the following filters:

- **sa-filter in 2.2.2.99** - This command drops all source-group pairs received from neighbor 2.2.2.99.

  NOTE
  The default action is to deny all source-group pairs from the specified neighbor. If you want to permit some pairs, use route maps.

- **sa-filter in 2.2.2.97 route-map msdp_map** - This command drops source-group pairs received from neighbor 2.2.2.97 if the pairs have source addresses matching 10.x.x.x and group address 235.10.10.1.
- **sa-filter in 2.2.2.96 route-map msdp2_map rp-route-map msdp2_rp_map** - This command accepts all source-group pairs except those associated with RP 2.2.42.3.

Syntax: [no] sa-filter in | **originate** | **out** *ip-addr* [**route-map** *map-tag*] [**rp-route-map** *rp-map-tag*]

Selecting the **in** option applies the filter to incoming Source-Active messages.

Selecting the **originate** option applies the filter to self-originated outbound Source-Active messages.

Selecting the **out** option applies the filter to self-originated and forwarded outbound Source-Active messages.

The *ip-addr* parameter specifies the IP address of the MSDP neighbor. The filters apply to Source-Active messages received from or sent to this neighbor.

The **route-map** *map-tag* parameter specifies a route map. The device applies the filter to source-group pairs that match the route map. Use the **match ip address** *acl-id* command in the route map to specify an extended ACL that contains the source addresses.

The **rp-route-map** *rp-map-tag* parameter specifies a route map to use for filtering based on Rendezvous Point (RP) address. Use this parameter if you want to filter Source-Active messages based on their originating RP. Use the **match ip route-source***acl-id* command in the route map to specify an extended ACL that contains the RP address.

NOTE
The default filter action is deny. If you want to permit some source-group pairs, use a route map.

Filtering advertised Source-Active messages

The following example configures the device to advertise all source-group pairs except the ones that have source address 10.x.x.x.

The following commands configure extended ACLs to be used in the route map definition.

```
device(config)# access-list 123 permit ip 10.0.0.0 0.255.255.255 any
device(config)# access-list 125 permit ip any any
```

The following commands use the above ACLs to configure a route map which denies source-group with source address 10.x.x.x and any group address, while permitting everything else.

```
device(config)# route-map msdp_map deny 1
device(config-routemap msdp_map)# match ip address 123
device(config-routemap msdp_map)# exit
device(config)# route-map msdp_map permit 2
device(config-routemap msdp_map)# match ip address 125
device(config-routemap msdp_map)# exit
```

The following commands configure the Source-Active filter.

```
device(config)# router msdp
device(config-msdp-router)# sa-filter originate route-map msdp_map
```

To specify VRF information, enter the following commands at the MSDP VRF configuration level.

```
device(config)# router msdp vrf blue
device(config-msdp-router-vrf blue)# sa-filter originate route-map msdp_map
```

Syntax: [no] sa-filter originate [**route-map** *map-tag*]

The **route-map** *map-tag* parameter specifies a route map. The router applies the filter to source-group pairs that match the route map. Use the **match ip address** *acl-id* command in the route map to specify an extended ACL that contains the source and group addresses.

NOTE
The default filter action is deny. If you want to permit some source-group pairs, use a route map. A permit action in the route map allows the device to advertise the matching source-group pairs. A deny action in the route map drops the source-group pairs from advertisements.

Displaying MSDP information

You can display the following MSDP information:

- **Summary information** - The IP addresses of the peers, the state of the device MSDP session with each peer, and statistics for keepalive, source active, and notification messages sent to and received from each of the peers
- **VRF Information** - Summary information for a specific VRF
- **Peer information** - The IP address of the peer, along with detailed MSDP and TCP statistics
- **Source Active cache entries** - The source active messages cached by the router.

Displaying summary information

To display summary MSDP information, enter the **show ip msdp vrf blue summary** command.

```
device(config)#show ip msdp vrf blue summary
MSDP Peer Status Summary
KA: Keepalive SA:Source-Active NOT: Notification
Peer Address    Peer As    State         KA           SA            NOT        Age
                                     In     Out    In     Out    In     Out
40.40.40.1      1001       ESTABLISH 59     59     0      0      0      0      6
40.40.40.3      1001       ESTABLISH 59     59     0      0      0      0      47
47.1.1.2        N/A        ESTABLISH 59     59     0      0      0      0      47
device(config)#
```

Syntax: show ip msdp summary

The following table describes the output from this command.

TABLE 17 MSDP summary information

This field...	Displays...
Peer address	The IP address of the peer interface with the device
State	The state of the MSDP device connection with the peer. The state can be one of the following: • CONNECTING - The session is in the active open state. • ESTABLISHED - The MSDP session is fully up. • INACTIVE - The session is idle. • LISTENING - The session is in the passive open state.
KA In	The number of MSDP keepalive messages the MSDP device has received from the peer
KA Out	The number of MSDP keepalive messages the MSDP device has sent to the peer
SA In	The number of source active messages the MSDP device has received from the peer
SA Out	The number of source active messages the MSDP device has sent to the peer
NOT In	The number of notification messages the MSDP router has received from the peer
NOT Out	The number of notification messages the MSDP router has sent to the peer

Displaying peer information

To display MSDP peer information, enter the following command.

```
device#show ip msdp peer
        IP Address           State       Mesh-group-name
1       77.1.1.2             ESTABLISH
        Keep Alive Time  Hold Time   Age
        60               75         53
                             Message Sent         Message Received
        Keep Alive           1240                 1239
        Notifications        0                    0
        Source-Active        0                    0
        Lack of Resource     0
        Last Connection Reset Reason:Reason Unknown
        Notification Message Error Code Received:Unspecified
        Notification Message Error SubCode Received:Not Applicable
        Notification Message Error Code Transmitted:Unspecified
        Notification Message Error SubCode Transmitted:Not Applicable
        Local IP Address:  55.1.1.2
        TCP Connection state: ESTABLISHED
          Local host:  55.1.1.2, Local  Port: 8730
          Remote host: 77.1.1.2, Remote Port: 639
          ISentSeq: 1207132337  SendNext: 1207132386  TotUnAck:          0
          SendWnd:       16381  TotSent:          49  ReTrans:          0
          IRcvSeq:     4000739  RcvNext:     4000788  RcvWnd:       16384
          TotalRcv:         49  RcvQue:            0  SendQue:          0
        Input SA Filter:Not Applicable
        Input (S,G) route-map:None
        Input RP route-map:None
        Output SA Filter:Not Applicable
        Output (S,G) route-map:None
        Output RP route-map:None
```

Syntax: show ip msdp [**vrf** *vrf-name*] **peer**

The following table describes the output from this command.

TABLE 18 MSDP peer information

This field...	Displays...
Total number of MSDP peers	The number of MSDP peers configured on the device
IP Address	The IP address of the peer's interface with the device
State	The state of the MSDP device connection with the peer. The state can be one of the following: • CONNECTING - The session is in the active open state. • ESTABLISHED - The MSDP session is fully up. • INACTIVE - The session is idle. • LISTENING - The session is in the passive open state.
Keep Alive Time	The keepalive time, which specifies how often this MSDP device sends keep alive messages to the neighbor. The keep alive time is 60 seconds and is not configurable.
Hold Time	The hold time, which specifies how many seconds the MSDP device will wait for a KEEPALIVE or UPDATE message from an MSDP neighbor before deciding that the neighbor is dead. The hold time is 90 seconds and is not configurable.
Keep Alive Message Sent	The number of keepalive messages the MSDP device has sent to the peer.
Keep Alive Message Received	The number of keepalive messages the MSDP device has received from the peer.
Notifications Sent	The number of notification messages the MSDP device has sent to the peer.

TABLE 18 MSDP peer information (continued)

This field...	Displays...
Notifications Received	The number of notification messages the MSDP device has received from the peer.
Source-Active Sent	The number of source active messages the MSDP device has sent to the peer.
Source-Active Received	The number of source active messages the MSDP device has received from the peer.
Last Connection Reset Reason	The reason the previous session with this neighbor ended.
Notification Message Error Code Received	The MSDP device has received a notification message from the neighbor that contains an error code corresponding to one of the following errors. Some errors have subcodes that clarify the reason for the error. Where applicable, the subcode messages are listed underneath the error code messages: • 1 - Message Header Error • 2 - SA-Request Error • 3 - SA-Message or SA-Response Error • 4 - Hold Timer Expired • 5 - Finite State Machine Error • 6 - Notification • 7 - Cease For information about these errors, refer to section 17 in the Internet draft describing MSDP, "draft-ietf-msdp-spec".
Notification Message Error SubCode Received	See above.
Notification Message Error Code Transmitted	The error message corresponding to the error code in the NOTIFICATION message this MSDP router sent to the neighbor. See the description for the Notification Message Error Code Received field for a list of possible codes.
Notification Message Error SubCode Transmitted	See above.
TCP Statistics	

TABLE 18 MSDP peer information (continued)

This field...	Displays...
TCP connection state	The state of the connection with the neighbor. Can be one of the following: • LISTEN - Waiting for a connection request. • SYN-SENT - Waiting for a matching connection request after having sent a connection request. • SYN-RECEIVED - Waiting for a confirming connection request acknowledgment after having both received and sent a connection request. • ESTABLISHED - Data can be sent and received over the connection. This is the normal operational state of the connection. • FIN-WAIT-1 - Waiting for a connection termination request from the remote TCP, or an acknowledgment of the connection termination request previously sent. • FIN-WAIT-2 - Waiting for a connection termination request from the remote TCP. • CLOSE-WAIT - Waiting for a connection termination request from the local user. • CLOSING - Waiting for a connection termination request acknowledgment from the remote TCP. • LAST-ACK - Waiting for an acknowledgment of the connection termination request previously sent to the remote TCP (includes an acknowledgment of the connection termination request). • TIME-WAIT - Waiting for enough time to pass to be sure the remote TCP received the acknowledgment of the connection termination request. • CLOSED - There is no connection state.
Local host	The IP address of the MSDP device interface with the peer.
Local port	The TCP port the MSDP router is using for the BGP4 TCP session with the neighbor.
Remote host	The IP address of the neighbor.
Remote port	The TCP port number of the peer end of the connection.
ISentSeq	The initial send sequence number for the session.
SendNext	The next sequence number to be sent.
TotUnAck	The number of sequence numbers sent by the MSDP device that have not been acknowledged by the neighbor.
SendWnd	The size of the send window.
TotSent	The number of sequence numbers sent to the neighbor.
ReTrans	The number of sequence numbers the MSDP device retransmitted because they were not acknowledged.
IRcvSeq	The initial receive sequence number for the session.
RcvNext	The next sequence number expected from the neighbor.
RcvWnd	The size of the receive window.
TotalRcv	The number of sequence numbers received from the neighbor.
RcvQue	The number of sequence numbers in the receive queue.
SendQue	The number of sequence numbers in the send queue.

Displaying Source Active cache information

To display the Source Actives in the MSDP cache, use the following command.

```
device # show ip msdp vrf blue sa-cacheTotal of 10 SA cache entriesIndex RP address (Source, Group)
Orig Peer Age1 2.2.2.2 (192.6.1.10, 227.1.1.1) 192.1.1.2 0 2 2.2.2.2 (192.6.1.10, 227.1.1.2)
192.1.1.2 0 3 2.2.2.2 (192.6.1.10, 227.1.1.3) 192.1.1.2 0 4 2.2.2.2 (192.6.1.10, 227.1.1.4)
192.1.1.2 0 5 2.2.2.2 (192.6.1.10, 227.1.1.5) 192.1.1.2 0 6 2.2.2.2 (192.6.1.10, 227.1.1.6)
192.1.1.2 0 7 2.2.2.2 (192.6.1.10, 227.1.1.7) 192.1.1.2 0 8 2.2.2.2 (192.6.1.10, 227.1.1.8)
192.1.1.2 0 9 2.2.2.2 (192.6.1.10, 227.1.1.9) 192.1.1.2 0 10 2.2.2.2 (192.6.1.10, 227.1.1.10)
192.1.1.2 0
```

Syntax: show ip msdp [**vrf** *vrf-name*] **sa-cache** [*source-address* | *group-address* | **peer-as as-number** | **counts** | **orig-rp rp-address** | **peer peer-address**] [**rejected** | **self-originated**]]

The *source-address* parameter selects the source address of the SA entry.

The *group-address* parameter selects the group address of the SA entry.

The **peer-as** keyword specifies the BGP AS Number of the forwarding peer.

The **counts** keyword displays only the count of entries.

The **orig-rp** keyword specifies the originating RP address.

The **peer** keyword specifies the peer address.

The **rejected** keyword displays the rejected SAs.

The **self-originated** keyword displays the self-originated SAs.

The following table describes the output from this command.

TABLE 19 MSDP source active cache

This field...	Displays...
Total	The number of entries the cache currently contains.
Index	The cache entry number.
RP	The RP through which receivers can access the group traffic from the source
SourceAddr	The IP address of the multicast source.
GroupAddr	The IP multicast group to which the source is sending information.
Orig Peer	The peer from which this source-active entry was received.
Age	The number of seconds the entry has been in the cache

You can use the following command to filter the output to display only the entries matching a specific source.

```
device#show ip msdp sa-cache 1.1.1.1
```

You can use the following command to filter the output to display only the entries matching a specific group.

```
device#show ip msdp sa-cache 239.1.1.1
```

You can use the following command to filter the output to display only the SA cache entries that are

received from peers in the BGP AS Number 100.

```
device#show ip msdp sa-cache 100
```

You can use the following command to filter the output to display only the SA cache entries that are

originated by the RP 1.1.1.1.

```
device#show ip msdp sa-cache orig-rp 1.1.1.1
```

You can use the following command to filter the output to display only the SA cache entries that are

received from the peer 1.1.1.1.

```
device#show ip msdp sa-cache peer 1.1.1.1
```

You can use the following command to display the rejected SAs. You can further narrow down by quoting the reason for rejection.

```
device#show ip msdp sa-cache rejected
```

You can use the following command to display the self-originated SAs.

```
device#show ip msdp sa-cache self-originated
```

Displaying MSDP RPF-Peer

To display MSDP peer information for the RP 1.1.1.1, enter the following command.

```
device# show ip msdp rpf-peer 1.1.1.1
MSDP Peer Status Summary
KA: Keepalive SA:Source-Active NOT: Notification
Peer Address Peer As State KA SA NOT Age
In Out In Out In Out
40.40.40.3 1001 ESTABLISH 62 62 0 0 0 0 7
device#
```

Syntax: show ip msdp [**vrf** *vrf-name*] **rpf-peer ip-addr**

Displaying MSDP Peer

To display MSDP peer information, enter the following command.

```
device# show ip msdp peer 40.40.40.3
MSDP Peer Status Summary
KA: Keepalive SA:Source-Active NOT: Notification
Peer Address Peer As State KA SA NOT Age
In Out In Out In Out
40.40.40.3 1001 ESTABLISH 62 62 0 0 0 0 7
device#
```

Syntax: show ip msdp peer *peer-addr*

Displaying MSDP VRF RPF-Peer

To display MSDP peer information for a specific VRF, enter the following command.

```
device#sh ip msdp vrf Blue rpf-peer 40.40.40.2
MSDP Peer Status Summary
KA: Keepalive SA:Source-Active NOT: Notification
 Peer Address    Peer As    State         KA           SA            NOT        Age
                                                                  In     Out    In     Out    In     Out
40.40.40.2      1001       ESTABLISH 5569   5568   0      0      0      0      57
```

Syntax: show ip msdp vrf *VRF-name* **rpf-peer** *ip-addr*

Clearing MSDP information

You can clear the following MSDP information:

- Peer information
- Source active cache
- MSDP statistics

Clearing peer information

To clear MSDP peer information, enter the following command at the Privileged EXEC level of the CLI.

```
device# clear ip msdp peer 205.216.162.1
```

Syntax: clear ip msdp peer [*ip-addr*]

The command in this example clears the MSDP peer connection with MSDP router 205.216.162.1. The CLI displays a message to indicate when the connection has been successfully closed. To clear all the peers, omit the *ip-addr* variable from the command.

Clearing peer information on a VRF

To clear the MSDP VRF peers, enter the following command at the MSDP VRF configuration level.

```
device#clear ip msdp vrf blue peer 207.207.162.5
```

Syntax: clear ip msdp [**vrf** *vrf-name*] **peer** [*ip-addr*]

Clearing the source active cache

To clear the source active cache, enter the following command at the Privileged EXEC level of the CLI.

```
device# clear ip msdp sa-cache
```

Syntax: clear ip msdp sa-cache [*ip-addr*]

The command in this example clears all the cache entries. Use the *ip-addr* variable to clear only the entries matching either a source or a group.

Clearing the source active cache for a VRF

To clear the MSDP VRF source active cache by entering the following command at the MSDP VRF configuration level.

```
device#clear ip msdp sa-cache
 vrf blue
```

Syntax: clear ip msdp [**vrf** *vrf-name*] **sa-cache** [*ip-addr*]

Clearing MSDP statistics

To clear MSDP statistics, enter the following command at the Privileged EXEC level of the CLI.

```
device# clear ip msdp statistics
```

Syntax: clear ip msdp statistics [*ip-addr*]

The command in this example clears statistics for all the peers. To clear statistics for only a specific peer, enter the IP address of the peer.

Clearing MSDP VRF statistics

To clear the MSDP VRF statistics by entering the following command.

```
device# clear ip msdp vrf blue statistics
```

Syntax: clear ip msdp [**vrf** *vrf-name*] **statistics** [*ip-addr*]

The command in this example clears statistics for all the peers. To clear statistics for only a specific peer, enter the IP address of the peer.

The command in this example clears all statistics for all the peers in the VRF "blue".

Configuring MSDP mesh groups

A PIM Sparse domain can have several RPs that are connected to each other to form an MSDP mesh group. To qualify as a mesh group, the RPs have to be fully meshed; that is, each RP must be connected to all peer RPs in a domain. (Refer to Figure 8.)

A mesh group reduces the forwarding of SA messages within a domain. Instead of having every RP in a domain forward SA messages to all the RPs within that domain, only one RP forwards the SA message. Since an MSDP mesh group is fully meshed, peers do not forward SA messages received in a domain from one member to any member of the group. The RP that originated the SA or the first RP in a domain that receives the SA message is the only one that forwards the message to the members of a mesh group. An RP can forward an SA message to any MSDP router as long as that peer is farther away from the originating RP than the current MSDP router.

The following figure shows an example of an MSDP mesh group. In a PIM-SM mesh group the RPs are configured to be peers of each other. They can also be peers of RPs in other domains.

FIGURE 8 Example of MSDP mesh group

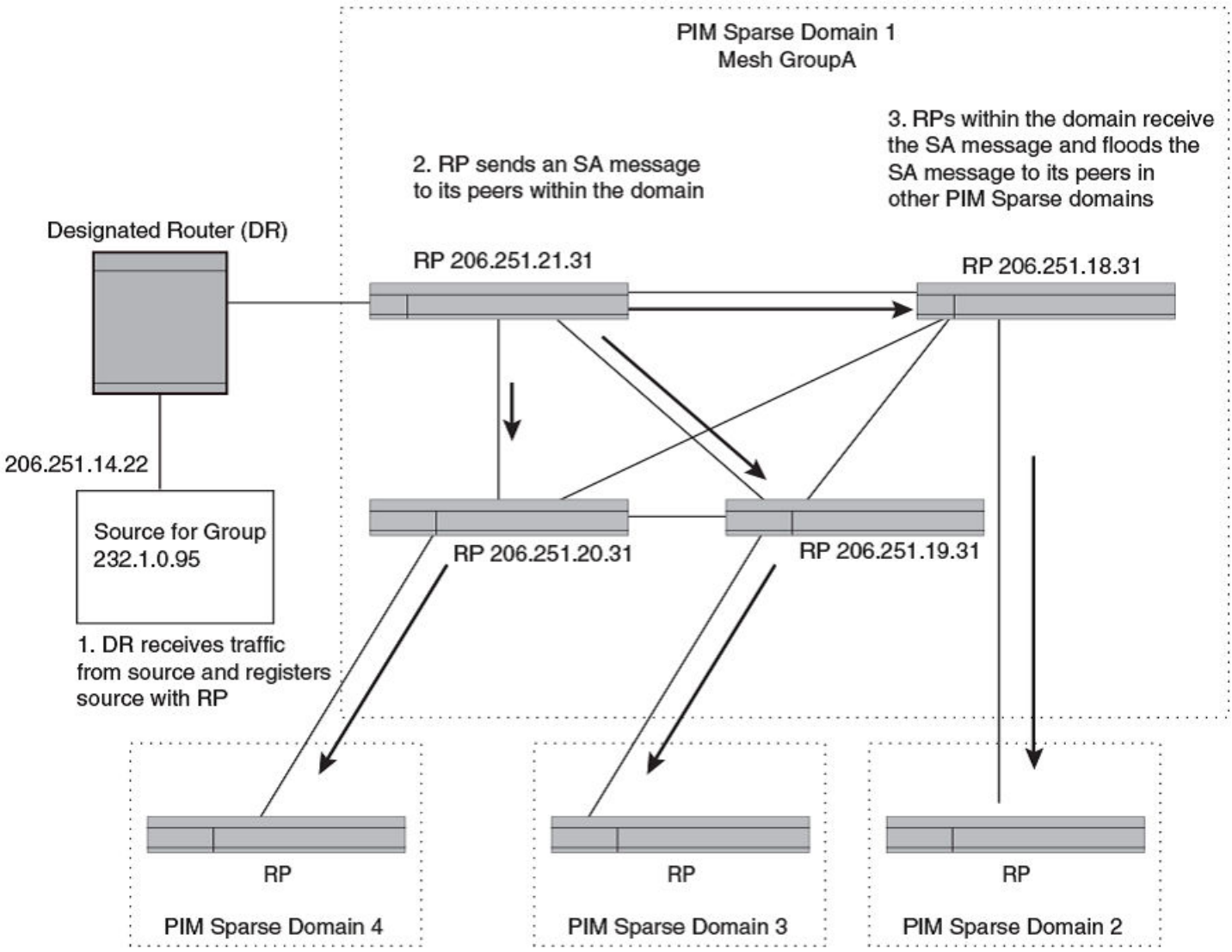

PIM Sparse Domain 1 in Figure 8 contains a mesh group with four RPs. When the first RP, for example, RP 206.251.21.31 originates or receives an SA message from a peer in another domain, it sends the SA message to its peers within the mesh group. However, the peers do not send the message back to the originator RP or to each other. The RPs then send the SA message farther away to their peers in other domains.The process continues until all RPs within the network receive the SA message.

Configuring MSDP mesh group

To configure an MSDP mesh group, enter commands such as the following on each device that will be included in the mesh group.

```
device(config)# router msdp
device(config-msdp-router)# msdp-peer 206.251.18.31 connect-source loopback 2
device(config-msdp-router)# msdp-peer 206.251.19.31 connect-source loopback 2
device(config-msdp-router)# msdp-peer 206.251.20.31 connect-source loopback 2
```

```
device(config-msdp-router)# mesh-group GroupA 206.251.18.31
device(config-msdp-router)# mesh-group GroupA 206.251.19.31
device(config-msdp-router)# mesh-group GroupA 206.251.20.31
device(config-msdp-router)# exit
```

Syntax: [no] mesh-group *group-name peer-address*

The sample configuration above reflects the configuration in Figure 8 on page 129. On RP 206.251.21.31 you specify its peers within the same domain (206.251.18.31, 206.251.19.31, and 206.251.20.31).

You first configure the MSDP peers using the **msdp-peer** command to assign their IP addresses and the loopback interfaces.

Next, place the MSDP peers within a domain into a mesh group. Use the **mesh-group** command. There are no default mesh groups.

The *group-name* parameter identifies the mesh group. Enter up to 31 characters for group-name. You can have up to 4 mesh groups within a multicast network. Each mesh group can include up to 15 peers.

The *peer-address* parameter specifies the IP address of the MSDP peer that is being placed in the mesh group. Each mesh group can include up to 32 peers.

> **NOTE**
> On each of the device that will be part of the mesh group, there must be a mesh group definition for all the peers in the mesh-group.

A maximum of 32 MSDP peers can be configured per mesh group.

You can use the **show ip msdp** [**vrf** *vrf-name*] **mesh-group** *group-name* command to view the details of a specific mesh-group or the mesh-group details for the VRF instance specified by the *vrf-name* variable. .

MSDP Anycast RP

MSDP Anycast RP is a method of providing intra-domain redundancy and load-balancing between multiple Rendezvous Points (RP) in a Protocol Independent Multicast Sparse mode (PIM-SM) network. It is accomplished by configuring all RPs within a domain with the same anycast RP address which is typically a loopback IP address. Multicast Source Discovery Protocol (MSDP) is used between all of the RPs in a mesh configuration to keep all RPs in sync regarding the active sources.

PIM-SM routers are configured to register (statically or dynamically) with the RP using the same anycast RP address. Since multiple RPs have the same anycast address, an Interior Gateway Protocol (IGP) such as OSPF routes the PIM-SM router to the RP with the best route. If the PIM-SM routers are distributed evenly throughout the domain, the loads on RPs within the domain will be distributed. If the RP with the best route goes out of service, the PIM-SM router's IGP changes the route to the closest operating RP that has the same anycast address.

This configuration works because MSDP is configured between all of the RPs in the domain. Consequently, all of the RPs share information about active sources.

This feature uses functionality that is already available on the Ruckus device but re-purposes it to provide the benefits desired as described in RFC 3446.

Configuring MSDP Anycast RP

To configure MSDP Anycast RP, you must perform the following tasks:

- Configure a loopback interface with the anycast RP address on each of the RPs within the domain and enable PIM-SM on these interfaces.

- Ensure that the anycast RP address is leaked into the IGP domain. This is typically done by enabling the IGP on the loopback interface (in passive mode) or redistributing the connected loopback IP address into the IGP.

  NOTE
  The anycast RP address *must* not be the IGP router-id.

- Enable PIM-SM on all interfaces on which multicast routing is desired.
- Enable an IGP on each of the loopback interfaces and physical interfaces configured for PIM-SM.
- Configure loopback interfaces with unique IP addresses on each of the RPs for MSDP peering. This loopback interface is also used as the MSDP originator-id.
- The non-RP PIM-SM routers may be configured to use the anycast RP address statically or dynamically (by the PIMv2 bootstrap mechanism).

Example

The example shown in Figure 9 is a simple MSDP Anycast-enabled network with two RPs and two PIM-SM routers. Loopback 1 in RP 1 and RP 2 have the same IP address. Loopback 2 in RP1 and Loopback 2 in RP2 have different IP addresses and are configured as MSDP peering IP addresses in a mesh configuration.

In the PIM configuration for PIM-SM routers PIMR1 and PIMR2 the RP address is configured to be the anycast RP address that was configured on the Loopback 1 interfaces on RP1 and RP2. OSPF is configured as the IGP for the network and all of the devices are in OSPF area 0.

Since PIMR1 has a lower cost path to RP1 and PIMR2 has a lower cost path to RP2 they will register with the respective RPs when both are up and running. This shares the load between the two RPs. If one of the RPs fails, the higher-cost path to the IP address of Loopback 1 on the RPs is used to route to the still-active RP.

The configuration examples demonstrate the commands required to enable this application.

FIGURE 9 Example of a MDSP Anycast RP network

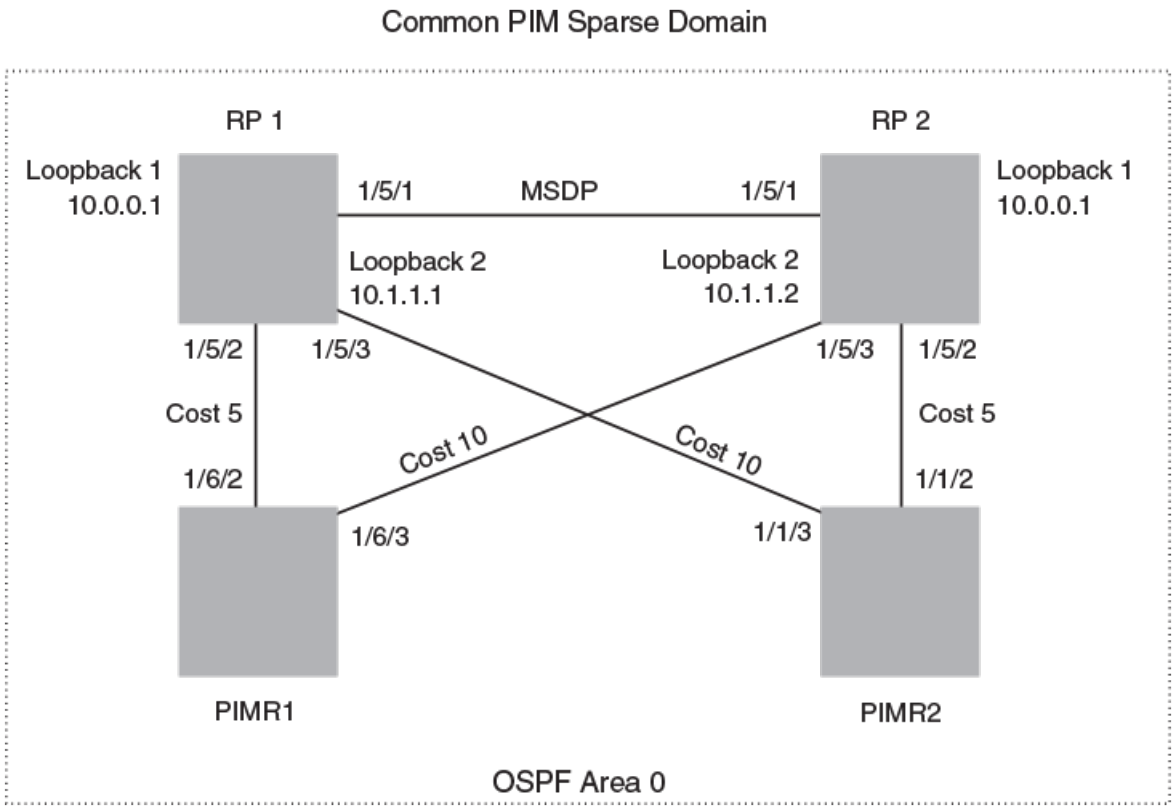

RP 1 configuration

The following commands provide the configuration for the RP 1 router in Figure 9.

```
RP1(config)#router ospf
RP1(config-ospf-router)# area 0
RP1(config-ospf-router)# exit
RP1(config)# interface loopback 1
RP1(config-lbif-1)# ip ospf area 0
RP1(config-lbif-1)# ip ospf passive
RP1(config-lbif-1)# ip address 10.0.0.1/32
RP1(config-lbif-1)# ip pim-sparse
RP1(config-lbif-1)# exit
RP1(config)# interface loopback 2
RP1(config-lbif-2)# ip ospf area 0
RP1(config-lbif-2)# ip ospf passive
RP1(config-lbif-2)# ip address 10.1.1.1/32
RP1(config-lbif-2)# exit
RP1(config)# interface ethernet 1/5/1
RP1(config-if-e1000-1/5/1)# ip ospf area 0
RP1(config-if-e1000-1/5/1)# ip address 192.1.1.1/24
RP1(config-if-e1000-1/5/1)# ip pim-sparse
RP1(config)# interface ethernet 1/5/2
RP1(config-if-e1000-1/5/2)# ip ospf area 0
RP1(config-if-e1000-1/5/2)# ip ospf cost 5
RP1(config-if-e1000-1/5/2)# ip address 192.2.1.1/24
RP1(config-if-e1000-1/5/2)# ip pim-sparse
RP1(config)# interface ethernet 1/5/3
RP1(config-if-e1000-1/5/3)# ip ospf area 0
RP1(config-if-e1000-1/5/3)# ip ospf cost 10
RP1(config-if-e1000-1/5/3)# ip address 192.3.1.1/24
```

```
RP1(config-if-e1000-1/5/3)# ip pim-sparse
RP1(config-if-e1000-1/5/3)# exit
RP1(config)# router pim
RP1(config-pim-router)# rp-candidate loopback 1
RP1(config-pim-router)# exit
RP1(config)# router msdp
RP1(config-msdp-router)# msdp-peer 10.1.1.2 connect-source loopback 2
RP1(config-msdp-router)# originator-id loopback 2
```

RP 2 configuration

The following commands provide the configuration for the RP 2 router in Figure 9.

```
RP2(config)#router ospf
RP2(config-ospf-router)# area 0
RP2(config-ospf-router)# exit
RP2(config)# interface loopback 1
RP2(config-lbif-1)# ip ospf area 0
RP2(config-lbif-1)# ip ospf passive
RP2(config-lbif-1)# ip address 10.0.0.1/32
RP2(config-lbif-1)# ip pim-sparse
RP2(config-lbif-1)# exit
RP2(config)# interface loopback 2
RP2(config-lbif-2)# ip ospf area 0
RP2(config-lbif-2)# ip ospf passive
RP2(config-lbif-2)# ip address 10.1.1.2/32
RP2(config-lbif-2)# exit
RP2(config)# interface ethernet 1/5/1
RP2(config-if-e1000-1/5/1)# ip ospf area 0
RP2(config-if-e1000-1/5/1)# ip address 192.1.1.2/24
RP2(config-if-e1000-1/5/1)# ip pim-sparse
RP2(config)# interface ethernet 1/5/2
RP2(config-if-e1000-1/5/2)# ip ospf area 0
RP2(config-if-e1000-1/5/2)# ip ospf cost 5
RP2(config-if-e1000-1/5/2)# ip address 192.5.2.1/24
RP2(config-if-e1000-1/5/2)# ip pim-sparse
RP2(config)# interface ethernet 1/5/3
RP2(config-if-e1000-1/5/3)# ip ospf area 0
RP2(config-if-e1000-1/5/3)# ip ospf cost 10
RP2(config-if-e1000-1/5/3)# ip address 192.6.1.2/24
RP2(config-if-e1000-1/5/3)# ip pim-sparse
RP2(config-if-e1000-1/5/3)# exit
RP2(config)# router pim
RP2(config-pim-router)# rp-candidate loopback 1
RP2(config-pim-router)# exit
RP2(config)# router msdp
RP2(config-msdp-router)# msdp-peer 10.1.1.1 connect-source loopback 2
RP2(config-msdp-router)# originator-id loopback 2
```

PIMR1 configuration

The following commands provide the configuration for the PIMR1 router in Figure 9.

```
PIMR1(config)#router ospf
PIMR1(config-ospf-router)# area 0
PIMR1(config-ospf-router)# exit
PIMR1(config)# interface ethernet 1/6/2
PIMR1(config-if-e1000-1/6/2)# ip ospf area 0
PIMR1(config-if-e1000-1/6/2)# ip ospf cost 5
PIMR1(config-if-e1000-1/6/2)# ip address 192.2.1.2/24
PIMR1(config-if-e1000-1/6/2)# ip pim-sparse
PIMR1(config)# interface ethernet 1/6/3
PIMR1(config-if-e1000-1/6/3)# ip ospf area 0
PIMR1(config-if-e1000-1/6/3)# ip ospf cost 10
PIMR1(config-if-e1000-1/6/3)# ip address 192.6.1.1/24
PIMR1(config-if-e1000-1/6/3)# ip pim-sparse
PIMR1(config-if-e1000-1/6/3)# exit
PIMR1(config)# router pim
```

```
PIMR1(config-pim-router)# rp-address 10.0.0.1
PIMR1(config-pim-router)# exit
```

PIMR2 configuration

The following commands provide the configuration for the PIMR2 router in Figure 9.

```
PIMR2(config)#router ospf
PIMR2(config-ospf-router)# area 0
PIMR2(config-ospf-router)# exit
PIMR2(config)# interface ethernet 1/1/2
PIMR2(config-if-e1000-1/1/2)# ip ospf area 0
PIMR2(config-if-e1000-1/1/2)# ip ospf cost 5
PIMR2(config-if-e1000-1/1/2)# ip address 192.5.2.2/24
PIMR2(config-if-e1000-1/1/2)# ip pim-sparse
PIMR2(config)# interface ethernet 1/1/3
PIMR2(config-if-e1000-1/1/3)# ip ospf area 0
PIMR2(config-if-e1000-1/1/3)# ip ospf cost 10
PIMR2(config-if-e1000-1/1/3)# ip address 192.3.1.2/24
PIMR2(config-if-e1000-1/1/3)# ip pim-sparse
PIMR2(config-if-e1000-1/1/3)# exit
PIMR2(config)# router pim
PIMR2(config-pim-router)# rp-address 10.0.0.1
PIMR2(config-pim-router)# exit
```

PIM Anycast RP

PIM Anycast RP is a method of providing load balancing and fast convergence to PIM RPs in an IPv4 multicast domain. The RP address of the Anycast RP is a shared address used among multiple PIM routers, known as PIM RP. The PIM RP routers create an Anycast RP set. Each router in the Anycast RP set is configured using two IP addresses; a shared RP address in their loopback address and a separate, unique ip address. The loopback address must be reachable by all PIM routers in the multicast domain. The separate, unique ip address is configured to establish static peering with other PIM routers and communication with the peers.

When the source is activated in a PIM Anycast RP domain, the PIM First Hop (FH) will register the source to the closet PIM RP. The PIM RP follows the same MSDP Anycast RP operation by decapsulating the packet and creating the (s,g) state. If there are external peers in the Anycast RP set, the router will re-encapsulate the packet with the local peering address as the source address of the encapsulation. The router will unicast the packet to all Anycast RP peers. The re-encapsulation of the data register packet to Anycast RP peers ensures source state distribution to all RPs in a multicast domain.

Configuring PIM Anycast RP

A new PIM CLI is introduced for PIM Anycast RP under the router pim sub mode. The PIM CLI specifies mapping of the RP and the Anycast RP peers.

To configure PIM Anycast RP, enter the following command.

```
device(config)#router pim
device(config-pim-router)#rp-address 100.1.1.1
device(config-pim-router)#anycast-rp 100.1.1.1 my-anycast-rp-set-acl
```

Syntax: [no] anycast-rp *rp-address* **anycast-rp-set-acl**

The *rp address* parameter specifies a shared RP address used among multiple PIM routers.

The **anycast-rp-set-acl** parameter specifies a host based simple acl used to specifies the address of the Anycast RP set, including a local address.

The following example is a configuration of PIM Anycast RP 100.1.1.1.The example avoids using loopback 1 interface when configuring PIM Anycast RP because the loopback 1 address could be used as a router-id. A PIM First Hop router will register the source with the closest RP. The first RP that receives the register will re-encapsulate the register to all other Anycast RP peers. Please refer to Figure 10 as described in the configuration of PIM Anycast RP 100.1.1.1.

```
device(config)#interface loopback 2
device(config-lbif-2)#ip address 100.1.1.1/24
device(config-lbif-2)#ip pim-sparse
device(config-lbif-2)#interface loopback 3
device(config-lbif-3)#ip address 1.1.1.1/24
device(config-lbif-3)#ip pim-sparse
device(config-lbif-3)#router pim
device(config-pim-router)#rp-address 100.1.1.1
device(config-pim-router)#anycast-rp 100.1.1.1 my-anycast-rp-set
device(config-pim-router)#ip access-list standard my-anycast-rp-set
device(config-std-nacl)#permit host 1.1.1.1
device(config-std-nacl)#permit host 2.2.2.2
device(config-std-nacl)#permit host 3.3.3.3
```

The RP shared address 100.1.1.1 is used in the PIM domain. IP addresses 1.1.1.1, 2.2.2.2, and 3.3.3.3 are listed in the ACL that forms the self inclusive Anycast RP set. Multiple anycast-rp instances can be configured on a system; each peer with the same or different Anycast RP set.

NOTE
The PIM software supports up to eight PIM Anycast-RP routers. All deny statements in the anycast_rp_set acl and additional routers more than eight listed in an access list are ignored.

The example shown in the following figure is a PIM Anycast-enabled network with 3 RPs, 1 PIM-FH router connecting to its active source and local receiver. Loopback 2 in RP1, RP2, and RP3 have the same IP addresses 100.1.1.1. Loopback 3 in RP1, RP2, and RP3 each have separate IP addresses configured to communicate with their peers in the Anycast RP set.

FIGURE 10 Example of a PIM Anycast RP network

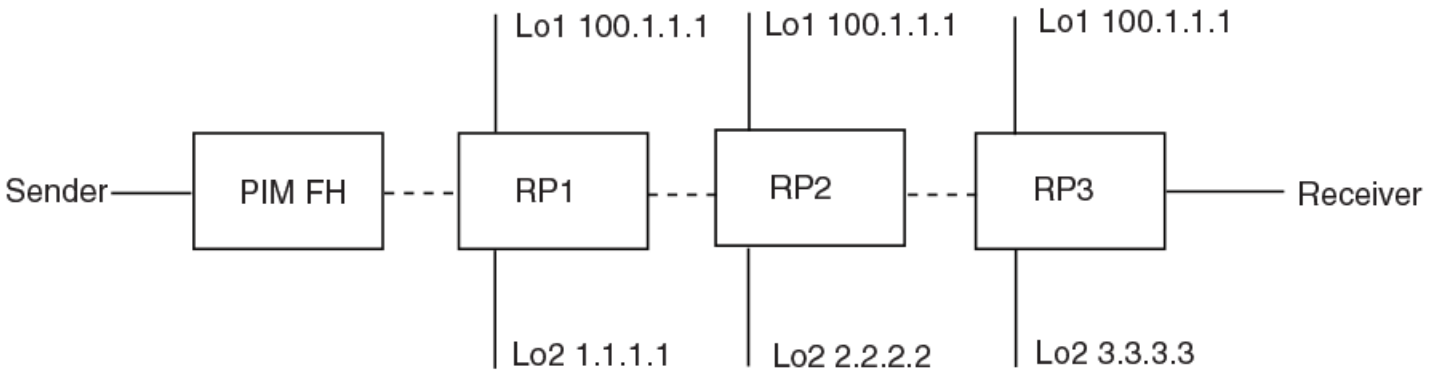

Displaying information for a PIM Anycast RP interface

To display information for a PIM Anycast RP interface, enter the following command.

```
device(config)#show ip pim anycast-rp
Number of Anycast RP: 1
Anycast RP: 100.1.1.1
  ACL ID: 200
  ACL Name: my-anycast-rp-set
  ACL Filter: SET
  Peer List:
    1.1.1.1
```

```
2.2.2.2
3.3.3.3
```

Syntax: show ip pim [**vrf** *vrf-name*] **anycast-rp**

The following table describes the parameters of the **show ip pim anycast-rp** command:

TABLE 20 Display of show ip pim anycast-rp

This field...	Displays...
Number of Anycast RP:	The Number of Anycast RP specifies the number of Anycast RP sets in the multicast domain.
Anycast RP:	The Anycast RP address specifies a shared RP address used among multiple PIM routers.
ACL ID:	The ACL ID specifies the ACL ID assigned.
ACL Name	The ACL Name specifies the name of the Anycast RP set.
ACL Filter	The ACL Filter specifies the ACL filter state SET or UNSET.
Peer List	The Peer List specifies host addresses that are permitted in the Anycast RP set.

NOTE
MSDP and Anycast RP do not interoperate. If transitioning from MSDP to Anycast RP or vice versa, all RPs in the network must be configured for the same method of RP peering; either Anycast RP or MSDP.

Static multicast routes

Configure static multicast routes to control the network paths, administrative distance, and precedence for multicast routes.

Static multicast routes allow you to control the network path used by multicast traffic. Static multicast routes are especially useful when the unicast and multicast topologies of a network are different. By configuring static multicast routes you don't have to make the topologies similar.

NOTE
In IP multicasting, source IP addresses are unicast addresses while destination IP addresses are multicast (group) addresses. Therefore, in IP multicasting, a route lookup is done for source IP address, rather than its destination IP address.

You can configure more than one static multicast route. The device always uses the most specific route that matches a multicast source address. Thus, if you want to configure a multicast static route for a specific multicast source and also configure another multicast static route for all other sources, you can configure two static routes

Configure the **distance** keyword in the **ip mroute** command to specify the administrative distance, which the device uses to determine the best path for a route. When comparing multiple paths for a route, the device prefers the path with the lower administrative distance. To ensure that the default static route is used, configure a low administrative distance value. However, the device prefers directly connected routes over other routes, no matter what the administrative distance.

Configure the **route-precedence** command to specify a precedence table that dictates how routes are selected for multicast.

IGMP Proxy

IGMP Proxy provides a means for routers to receive any or all multicast traffic from an upstream device if the router is not able to run PIM and runs only IGMP. IGMP Proxy supports IGMP v1, v2, and v3.

IGMP Proxy enables the router to issue IGMP host messages on behalf of hosts that the router discovered through standard PIM interfaces. The router acts as a proxy for its hosts and performs the host portion of the IGMP task on the upstream interface as follows:

- When queried, the router sends group membership reports for the groups learned.
- When one of its hosts joins a multicast address group to which none of its other hosts belong, the router sends unsolicited membership reports to that group.
- When the last of its hosts in a particular multicast group leaves the group, the router sends an unsolicited leave group membership report to group (multicast IP address 224.0.0.2).

IGMP proxy configuration notes

When using IGMP Proxy, you must do the following.

1. Configure PIM on all multicast client ports to build the group membership table. The group membership table will be reported by the proxy interface. Refer to Globally enabling and disabling PIM on page 81.
2. Enable IP multicast on an interface to an upstream router that will be the IGMP proxy interface and configure IGMP Proxy on that interface.

IGMP proxy limitations

- IGMP Proxy cannot be enabled on the same interface on which PIM SM or PIM DM is enabled.
- IGMP Proxy is only supported in a PIM Dense environment where there are IGMP clients connected to the Ruckus device. The Ruckus device does not send IGMP reports on an IGMP proxy interface for remote clients connected to a PIM neighbor,because it is not aware of groups that the remote clients are interested in. Static groups on the other PIM interfaces are included in proxy reports.
- PIM DM must be enabled in passive mode. This is a change from the previous implementation; to be backward compatible, PIM-DM passive mode is enabled in passive mode indirectly if PIM-DM is not enabled explicitly.

Configuring IGMP Proxy

Perform the following steps to configure IGMP Proxy.

1. Configure router PIM globally.

```
device(config)# router pim
```

2. Configure an IP address on the interface (physical, virtual routing, or tunnel interface) that will serve as the IGMP proxy for an upstream device by entering commands such as the following.

```
device(config)# interface ethernet 1/1/3
device(config-if-e1000-1/1/3)# ip address 10.95.5.1/24
```

3. Enable PIM passive on the interface.

```
device(config-if-e1000-1/1/3)# ip pim passive
```

4. Enable IGMP Proxy on the interface.

```
device(config-if-e1000-1/1/3)# ip igmp proxy
```

Syntax: [no] ip igmp proxy

Filtering groups in proxy report messages

Once IGMP Proxy is configured and the router receives a query on an IGMP Proxy interface, the router sends a report in response to the query before the IGMP maximum response time expires.

You can filter out groups in proxy report messages by specifying an access list name or number.

```
device(config-if-e1000-1/1/3)# ip igmp proxy group-filter ACL1
```

Syntax: [no] ip igmp proxy group-filter *access_list*

To remove the group filter association without disabling the proxy, please apply the command **ip igmp proxy** without the group filter option.

Displaying IGMP Proxy information

Use the **show ip igmp proxy** command to see information about the proxy groups and interfaces on the default VRF. For other VRF instances, use the same command with the vrf option. For example, **show ip igmp proxy vrf** *vrf_name* .

```
device#sh ip igmp proxy
Proxy instance name: default-vrf
Total proxy groups: 4
Address             Mode      Source    ref       flags
                              count     count
-----------------------------------------------------------
225.1.1.1           exclude   0         0         0
225.1.1.2           exclude   0         0         0
225.1.1.3           exclude   0         0         0
225.1.1.4           exclude   0         0         0
Proxy interfaces
----------------
Name      Oper     Cfg       Unsoli    Filter    Filter
          Version  Robust    Interval  Acl Id    Name
-----------------------------------------------------
e1/1/3       2         2         1         0
```

Syntax: show ip igmp proxy

The report shows the following information.

TABLE 21 Output of show ip igmp proxy

Field	Description
Address	Group address.
Mode	Multicast group mode. Can be "exclude" or "include."
Source count	Number sources in the given mode. A group in IGMP v2 has exclude mode with zero sources.
ref count	Number of proxy interfaces where the responses (query, state, change, etc) are scheduled.
flags	Can be "0" or "1." "1" indicates that the group state has changed and it needs to be reevaluated before a response is generated. "0" indicates that no change in state response is scheduled.
Name	Interface name.
Oper version	Current querier version or configured version.
Cfg Robust	Configured robustness value.
Unsoli Interval	Unsolitcited report interval in seconds.
Filter Acl Id	Number of the access list.
Filter Name	Name of the access list.

Use the show ip igmp proxy summary command to see summary information.

```
device# show ip igmp proxy summary
Proxy instances:
----------------------------------
Inst-Name      Total Grps
----------------------------------
default-vrf    4
```

The report shows the following information.

TABLE 22 Output of show ip igmp proxy summary

Field	Description
Inst-Name	Number of the proxy instance.
Total Grps	NUmber of proxy groups.

Syntax: show ip igmp proxy summary

```
Use the show ip igmp proxy stats command to see information about queries and reports on a specific
interface.
device# show ip igmp proxy stats
Intf      genQv1  genQv2  genQv3  GrpQ    SrcQ    Rprtv1  Rprtv2  Rprtv3  leave
           RX      RX      RX      RX      RX      TX      TX      TX      TX
-------------------------------------------------------------------------------
v3000      0       0       0       0       0       0       0       0       0
```

Syntax: show ip igmp proxy stats

The report shows the following information.

TABLE 23 Output of show ip igmp proxy stats

Field	Description
Intf	Interface
genQv1 RX	IGMP v1 general query received on proxy interface.
genQv2 RX	IGMP v2 general query received on proxy interface.
genQv3 RX	IGMP v3 general query received on proxy interface.
GrpQ RX	Group query received.
SrcQ RX	Source query received.
Rprtv1 TX	IGMP v1 report generated.
Rprtv2 TX	IGMP 2 report generated.
Rprtv3 TX	IGMP v3 report generated.
leave TX	IGMP v2 leave generated.

IGMP V3

The Internet Group Management Protocol (IGMP) allows an IPV4 system to communicate IP Multicast group membership information to its neighboring routers. The routers in turn limit the multicast of IP packets with multicast destination addresses to only those interfaces on the router that are identified as IP Multicast group members.

In IGMP V2, when a router sent a query to the interfaces, the clients on the interfaces respond with a membership report of multicast groups to the router. The router can then send traffic to these groups, regardless of the traffic source. When an

interface no longer needs to receive traffic from a group, it sends a leave message to the router which in turn sends a group-specific query to that interface to see if any other clients on the same interface is still active.

In contrast, IGMP V3 provides selective filtering of traffic based on traffic source. A router running IGMP V3 sends queries to every multicast enabled interface at the specified interval. These general queries determine if any interface wants to receive traffic from the router. The following are the three variants of the Query message:

- A "General Query" is sent by a multicast router to learn the complete multicast reception state of the neighboring interfaces. In a General Query, both the Group Address field and the Number of Sources (N) field are zero.
- A "Group-Specific Query" is sent by a multicast router to learn the reception state, with respect to a *single* multicast address, of the neighboring interfaces. In a Group-Specific Query, the Group Address field contains the multicast address of interest, and the Number of Sources (N) field contains zero.
- A "Group-and-Source-Specific Query" is sent by a multicast router to learn if any neighboring interface desires reception of packets sent to a specified multicast address, from any of a specified list of sources. In a Group-and-Source-Specific Query, the Group Address field contains the multicast address of interest, and the Source Address [i] fields contain the source address(es) of interest.

The hosts respond to these queries by sending a membership report that contains one or more of the following records that are associated with a specific group:

- Current-State Record that indicates from which sources the interface wants to receive and not receive traffic. The record contains source address of interfaces and whether or not traffic will be received or included (IS_IN) or not received or excluded (IS_EX) from that source.

The following messages are generated by hosts, not the response Query. These messages are generated when there is a change in the group member state.

- Filter-mode-change record. If the interface changes its current state from IS_IN to IS_EX, a TO_EX record is included in the membership report. Likewise, if an interface's current state changes from IS_EX to IS_IN, a TO_IN record appears in the membership report.

IGMP V2 Leave report is equivalent to a TO_IN (empty) record in IGMP V3. This record means that no traffic from this group will be received regardless of the source.

An IGMP V2 group report is equivalent to an IS_EX (empty) record in IGMP V3. This record means that all traffic from this group will be received regardless of source.

- Source-List-Change Record. If the interface wants to add or remove traffic sources from its membership report, the membership report can have an ALLOW record, which contains a list of new sources from which the interface wishes to receive traffic. It can also contains a BLOCK record, which lists current traffic sources from which the interfaces wants to stop receiving traffic.

In response to membership reports from the interfaces, the router sends a Group-Specific or a Group-and-Source Specific query to the multicast interfaces. For example, a router receives a membership report with a Source-List-Change record to block old sources from an interface. The router sends Group-and-Source Specific Queries to the source and group (S,G) identified in the record. If none of the interfaces is interested in the (S,G), it is removed from (S,G) list for that interface on the router.

Each IGMP V3-enabled router maintains a record of the state of each group and each physical port within a virtual routing interface. This record contains the group, group-timer, filter mode, and source records information for the group or interface. Source records contain information on the source address of the packet and source timer. If the source timer expires when the state of the group or interface is in Include mode, the record is removed.

Default IGMP version

IGMP V3 is available for Ruckus devices; however, these routers are shipped with IGMP V2-enabled. You must enable IGMP V3 globally or per interface.

Also, you can specify what version of IGMP you want to run on a device globally, on each interface (physical port or virtual routing interface), and on each physical port within a virtual routing interface. If you do not specify an IGMP version, IGMP V2 will be used.

Compatibility with IGMP V1 and V2

Different multicast groups, interfaces, and routers can run their own version of IGMP. Their version of IGMP is reflected in the membership reports that the interfaces send to the router. Routers and interfaces must be configured to recognized the version of IGMP you want them to process.

An interface or router sends the queries and reports that include its IGMP version specified on it. It may recognize a query or report that has a different version. For example, an interface running IGMP V2 can recognize IGMP V3 packets, but cannot process them. Also, a router running IGMP V3 can recognize and process IGMP V2 packet, but when that router sends queries to an IGMP V2 interface, the downgraded version is supported, no the upgraded version.

If an interface continuously receives queries from routers that are running versions of IGMP that are different from what is on the interface, the interface logs warning messages in the syslog every five minutes. Reports sent by interfaces to routers that contain different versions of IGMP do not trigger warning messages; however, you can see the versions of the packets using the **show ip igmp traffic** command.

The version of IGMP can be specified globally, per interface (physical port or virtual routing interface), and per physical port within a virtual routing interface. The IGMP version set on a physical port within a virtual routing interface supersedes the version set on a physical or virtual routing interface. Likewise, the version on a physical or virtual routing interface supersedes the version set globally on the device. The sections below present how to set the version of IGMP.

Globally enabling the IGMP version

To globally identify the IGMP version on a Ruckus device, enter the following command.

```
device(config)# ip igmp version 3
```

Syntax: [no] ip igmp version *version-number*

Enter 1, 2, or 3 for *version-number* . Version 2 is the default version.

Enabling the IGMP version per interface setting

To specify the IGMP version for a physical port, enter a command such as the following.

```
device(config)# interface ethernet 1/1/5
device(config-if-1/1/5)# ip igmp version 3
```

To specify the IGMP version for a virtual routing interface on a physical port, enter a command such as the following.

```
device(config)# interface ve 3
device(config-vif-1)# ip igmp version 3
```

Syntax: [no] ip igmp version *version-number*

Enter 1, 2, or 3 for *version-number* . Version 2 is the default version.

Enabling the IGMP version on a physical port within a virtual routing interface

To specify the IGMP version recognized by a physical port that is a member of a virtual routing interface, enter a command such as the following.

```
device(config)# interface ve 3
device(config-vif-3)# ip igmp version 2
device(config-vif-3)# ip igmp port-version 3 ethernet 1/1/3 to ethernet 1/1/7 ethernet 1/2/9
```

In this example, the second line sets IGMP V2 on virtual routing interface 3. However, the third line set IGMP V3 on ethernet ports 1/1/3 through 1/1/7 and 1/2/9. All other ports in this virtual routing interface are configured with IGMP V2.

Syntax: [no] ip igmp port-version *version-number* **ethernet** *unit/slot/port*

Enter 1, 2, or 3 for *version-number* . IGMP V2 is the default version.

The **ethernet** *unit/slot/port* parameter specifies which physical port within a virtual routing interface is being configured.

Enabling membership tracking and fast leave

NOTE
The IGMP V3 fast leave feature is supported in include mode, but does not work in the exclude mode.

IGMP V3 provides membership tracking and fast leave of clients. In IGMP V2, only one client on an interface needs to respond to a router's queries; therefore, some of the clients may be invisible to the router, making it impossible for the switch to track the membership of all clients in a group. Also, when a client leaves the group, the switch sends group specific queries to the interface to see if other clients on that interface need the data stream of the client who is leaving. If no client responds, the switch waits three seconds before it stops the traffic.

IGMP V3 contains the tracking and fast leave feature that you enable on virtual routing interfaces. Once enabled, all physical ports on that virtual routing interface will have the feature enabled. IGMP V3 requires all clients to respond to general and group specific queries so that all clients on an interface can be tracked. Fast leave allows clients to leave the group without the three second waiting period, if the following conditions are met:

- If the interface, to which the client belongs, has IGMP V3 clients only. Therefore, all physical ports on a virtual routing interface must have IGMP V3 enabled and no IGMP V1 or V2 clients can be on the interface. (Although IGMP V3 can handle V1 and V2 clients, these two clients cannot be on the interface in order for fast leave to take effect.)
- No other client on the interface is receiving traffic from the group to which the client belongs.

Every group on the physical interface of a virtual routing interface keeps its own tracking record. It can track by (source, group).

For example, two clients (Client A and Client B) belong to group1 but each is receiving traffic streams from different sources. Client A receives a stream from (source_1, group1) and Client B receives it from (source_2, group1). Now, if Client B leaves, the traffic stream (source_2, group1) will be stopped immediately. The **show ip igmp group tracking** command displays that clients in a group that are being tracked.

If a client sends a leave message, the client is immediately removed from the group. If a client does not send a report during the specified group membership time (the default is 140 seconds), that client is removed from the tracking list.

To enable the tracking and fast leave feature, enter commands such as the following.

```
device(config)# interface ve 13
device(config-vif-13)# ip igmp tracking
```

Syntax: [no] ip igmp tracking

Creating a static IGMP group

You can configure one or more physical ports to be a permanent (static) member of an IGMP group based on the range or count.

To configure two static groups starting from 226.0.0.1, enter either this command:

```
Device(config)# interface ethernet 1/1/5
Device(config-if-e1000-1/1/5)# ip igmp static-group 226.0.0.1 count 2
```

Or this command:

```
Device(config)# interface ethernet 1/1/5
Device(config-if-e1000-1/1/5)# ip igmp static-group 226.0.0.1 to 226.0.0.2
```

Syntax: [no] ip igmp static-group *ip-address* [**count** *count-number* | **to** *ip-address*]

Enter the IP address of the static IGMP group for *ip-address*. The count-number range is 2-256.

To configure two static groups on virtual ports starting from 226.0.0.1, enter either this command:

```
Device(config)# interface ethernet 1/1/5
Device(config-if-e1000-1/1/5)# ip igmp static-group 226.0.0.1 count 2 ethernet 1/1/5
```

Or this command:

```
Device(config)# interface ve 10
Device(config-vif-10)# ip igmp static-group 226.0.0.1 to 226.0.0.2 ethernet 1/1/5
```

Syntax: [no] ip igmp static-group *ip-address* [**count** *count-number* | **to** *ip-address*] **ethernet** *unit/slot/port*

Enter the IP address of the static IGMP group for *ip-address*. The count-number range is 2-256.

Enter the ID of the physical port of the VLAN that will be a member of the group for **ethernet** *unit/slot/port*.

NOTE
IGMPv3 does not support static IGMP group members.

NOTE
Static IGMP groups are supported only in Layer 3 mode.

Setting the query interval

The IGMP query interval period defines how often a switch will query an interface for group membership. Possible values are 2-3600 seconds and the default value is 125 seconds, but the value you enter must be a little more than twice the group membership time.

To modify the default value for the IGMP query interval, enter the following.

```
device(config)# ip igmp query-interval 120
```

Syntax: [no] ip igmp query-interval *2-3600*

The interval must be a little less than one half of the group membership time.

Setting the group membership time

Group membership time defines how long a group will remain active on an interface in the absence of a group report. Possible values are from 5 - 26000 seconds and the default value is 260 seconds.

To define an IGMP membership time of 240 seconds, enter the following.

```
device(config)# ip igmp group-membership-time 240
```

Syntax: [no] ip igmp group-membership-time *5-26000*

Setting the maximum response time

The maximum response time defines the maximum number of seconds that a client can wait before it replies to the query sent by the router. Possible values are 1 - 25. The default is 10.

To change the IGMP maximum response time, enter a command such as the following at the global CONFIG level of the CLI.

```
device(config)# ip igmp max-response-time 8
```

Syntax: [no] ip igmp max-response-time *num*

The *num* parameter specifies the maximum number of seconds for the response time. Enter a value from 1 - 25. The default is 10.

Displaying IGMPv3 information

The sections below present the show commands available for IGMP V3.

Displaying IGMP group status

You can display the status of all IGMP multicast groups on a device by entering the following command.

```
device# show ip igmp group
Total 2 entries
------------------------------------------------------
Idx Group Address    Port   Intf   Mode      Timer Srcs
---+----------------+------+------+---------+-----+----
  1 232.0.0.1        e1/6/2   v30    include     0   7
  2 226.0.0.1        e1/6/2   v30    exclude   240   2
                     e1/6/3   e1/6/3 include     0   3
Total number of groups 2
```

To display the status of one IGMP multicast group, enter a command such as the following.

```
device# show ip igmp group 239.0.0.1 detail
Total 2 entries
------------------------------------------------------
Idx Group Address    Port   Intf   Mode     Timer Srcs
---+----------------+------+------+-------+-----+----
  1 226.0.0.1        e1/6/2 v30    exclude   218   2
     S: 40.40.40.12
     S: 40.40.40.11
     S: 40.40.40.10
     S: 40.40.40.2          (Age: 218)
     S: 40.40.40.3          (Age: 218)
        226.0.0.1    e1/6/3 e1/6/3 include     0   3
     S: 30.30.30.3          (Age: 165)
     S: 30.30.30.2          (Age: 165)
     S: 30.30.30.1          (Age: 165)
```

If the tracking and fast leave feature is enabled, you can display the list of clients that belong to a particular group by entering commands such as the following.

```
device# show ip igmp group 224.1.10.1 tracking
Total 2 entries
------------------------------------------------------
```

```
Idx Group Address    Port    Intf   Mode    Timer Srcs
---+---------------+------+------+-------+-----+----
  1 226.0.0.1        e1/6/2 v30    exclude   253   3
     S: 40.40.40.12
     S: 40.40.40.11
     S: 40.40.40.10
     S: 40.40.40.2          (Age: 253)
                    C: 10.10.10.1       (Age: 253)
     S: 40.40.40.3          (Age: 253)
                    C: 10.10.10.1       (Age: 253)
        226.0.0.1   e1/6/3 e1/6/3 include     0   3
     S: 30.30.30.3          (Age: 196)
                    C: 10.2.0.1         (Age: 196)
     S: 30.30.30.2          (Age: 196)
                    C: 10.2.0.1         (Age: 196)
     S: 30.30.30.1          (Age: 196)
                    C: 10.2.0.1         (Age: 196)
```

Syntax: show ip igmp [**vrf** [*vrf-name*] **group** [*group-address* [**detail**] [**tracking**]]

If you want a report for a specific multicast group, enter that group's address for *group-address* . Omit the *group-address* if you want a report for all multicast groups.

The **vrf** parameter specifies that you want to display IGMP group information for the VRF specified by the *vrf-name* variable.

Enter **detail** if you want to display the source list of the multicast group.

Enter **tracking** if you want information on interfaces that have tracking enabled.

IGMP V2 and V3 statistics displayed on the report for each interface.

TABLE 24 Output of show ip igmp group

This field	Displays
Group	The address of the multicast group
Port	The physical port on which the multicast group was received.
Intf	The virtual interface on which the multicast group was received.
Timer	Shows the number of seconds the interface can remain in exclude mode. An exclude mode changes to include mode if it does not receive an "IS_EX" or "TO_EX" message during a certain period of time. The default is 140 seconds.
Mode	Indicates current mode of the interface: include or exclude. If the interface is in Include mode, it admits traffic only from the source list. If an interface is in exclude mode, it denies traffic from the source list and accepts the rest.
Srcs	Identifies the source list that will be included or excluded on the interface. If IGMP V2 group is in exclude mode with a #_src of 0, the group excludes traffic from 0 (zero) source list, which means that all traffic sources are included.

Clearing the IGMP group membership table

To clear the IGMP group membership table, enter the following command.

```
device# clear ip igmp cache
```

Syntax: clear ip igmp [**vrf** *vrf-name*] **cache**

This command clears the IGMP membership for the default router instance or for a specified VRF.

Use the **vrf** option to clear the traffic information for a VRF instance specified by the *vrf-name* variable.

Displaying static IGMP groups

The following command displays static IGMP groups for the "eng" VRF.

```
device#show ip igmp vrf eng static
Group Address    Interface Port List
---------------+---------+---------
      229.1.0.12       1/4/1 ethe 1/4/1
      229.1.0.13       1/4/1 ethe 1/4/1
      229.1.0.14       1/4/1 ethe 1/4/1
      229.1.0.92       1/4/1 ethe 1/4/1
```

Syntax: show ip igmp [**vrf** *vrf-name*] **static**

The **vrf** parameter specifies that you want to display static IGMP group information for the VRF specified by the *vrf-name* variable.

TABLE 25 Output of show ip igmp vrf static

This field	Displays
Group Address	The address of the multicast group.
Interface Port List	The physical ports on which the multicast groups are received.

Displaying the IGMP status of an interface

You can display the status of a multicast enabled port by entering a command such as the following.

```
device# show ip igmp interface
---------+------+---------+---------------+---------+-----+-----+---------
Intf/Port|Groups| Version |Querier        |  Timer  |V1Rtr|V2Rtr|Tracking
         |      |Oper  Cfg|               |OQrr GenQ|     |     |
---------+------+----+----+---------------+----+----+-----+-----+---------
e1/6/3       1    3    3                Self          0   94     No    No     Disabled
e1/6/4       0    2    -                Self          0   94     No    No     Disabled
v30          1    3    3                                         Disabled
e1/6/2            3    -                Self          0   20     No    No
v40          0    3    3                                         Disabled
e1/6/2            3    -                Self          0   20     No    No
v50          0    2    -                                         Disabled
e1/2/1            2    -                Self          0   29     No    No
e1/6/8            2    -                50.1.1.10    46    0     No    Yes
e1/6/1            2    -                Self          0  115     No    Yes
```

Syntax: show ip igmp [**vrf** *vrf-name*] **interface** [**ve** *number* [**group** *A.B.C.D*] | **ethernet** *unit/slot/port* | **tunnel** *num*]

The **vrf** parameter specifies that you want to display IGMP interface information for the VRF specified by the *vrf-name* variable.

Enter **ve** and its *number*, or **ethernet** and its *unit/slot/port* to display information for a specific virtual routing interface, or ethernet interface.

The **tunnel***num* parameter specifies a GRE tunnel interface that is being configured. The GRE tunnel interface is enabled under the router PIM configuration.

Entering an address for *group-address* displays information for a specified group on the specified interface.

The report shows the following information:

TABLE 26 Output of show ip igmp interface

This field	Displays
Intf	The virtual interface on which IGMP is enabled.
Port	The physical port on which IGMP is enabled.
Groups	The number of groups that this interface or port has membership.
Version	
Oper	The IGMP version that is operating on the interface.
Cfg	The IGMP version that is configured for this interface.
Querier	Where the Querier resides: The IP address of the router where the querier is located or Self - if the querier is on the same router as the intf or port.
Max response	
oQrr	Other Querier present timer.
GenQ	General Query timer
V1Rtr	Whether IGMPv1 is present on the intf or port.
V2Rtr	Whether IGMPv2 is present on the intf or port.
Tracking	Fast tracking status: Enabled or Disabled

Displaying IGMP traffic status

To display the traffic status on each virtual routing interface, enter the following command.

```
device# show ip igmp traffic
Recv  QryV2 QryV3 G-Qry GSQry MbrV2 MbrV3 Leave  IsIN  IsEX ToIN ToEX ALLOW BLK
v5       29     0     0     0     0     0     0     0     0    0    0     0    0
v18      15     0     0     0     0    30     0    60     0    0    0     0    0
v110      0     0     0     0     0    97     0   142    37    2    2     3    2
Send  QryV1 QryV2 QryV3 G-Qry GSQry
v5       0     2     0     0     0
v18      0     0    30    30     0
v110     0     0    30    44    11
```

Syntax: show ip igmp [**vrf** *vrf-name*] **traffic**

The **vrf** parameter specifies that you want to display IGMP traffic information for the VRF specified by the *vrf-name* variable.

The report shows the following information:

TABLE 27 Output of show ip igmp vrf traffic

This field	Displays
QryV2	Number of general IGMP V2 query received or sent by the virtual routing interface.
QryV3	Number of general IGMP V3 query received or sent by the virtual routing interface.
G-Qry	Number of group specific query received or sent by the virtual routing interface.

TABLE 27 Output of show ip igmp vrf traffic (continued)

This field	Displays
GSQry	Number of source specific query received or sent by the virtual routing interface.
MbrV2	The IGMP V2 membership report.
MbrV3	The IGMP V3 membership report.
Leave	Number of IGMP V2 "leave" messages on the interface. (See ToEx for IGMP V3.)
IsIN	Number of source addresses that were included in the traffic.
IsEX	Number of source addresses that were excluded in the traffic.
ToIN	Number of times the interface mode changed from exclude to include.
ToEX	Number of times the interface mode changed from include to exclude.
ALLOW	Number of times that additional source addresses were allowed or denied on the interface:
BLK	Number of times that sources were removed from an interface.

Clearing IGMP traffic statistics

To clear statistics for IGMP traffic, enter the following command.

```
device# clear ip igmp traffic
```

Syntax: clear ip igmp [**vrf** *vrf-name*] **traffic**

This command clears all the multicast traffic information on all interfaces on the device.

Use the **vrf** option to clear the traffic information for a VRF instance specified by the *vrf-name* variable. T

Displaying IGMP settings

To display global IGMP settings or IGMP settings for a specified VRF. To display global IGMP settings, enter the following command.

```
device#show ip igmp settings
IGMP Global Configuration
  Query Interval            : 125s   Configured Interval    : 125
  Max Response Time         : 10s
  Group Membership Time     : 260s
  Operating Version         : 2      Configured Version     : 0
  Robustness Variable       : 2
  Router Alert Check        : Enabled
  Last Member Query Interval: 1      Last Member Query Count: 2
  Older Host Present Timer  : 260
  Maximum Group Address     : 4096
```

Syntax: show ip igmp [**vrf** *vrf-name*] **settings**

The **vrf** parameter specifies that you want to display IGMP settings information for the VRF specified by the *vrf-name* variable.

The report shows the following information:

TABLE 28 Output of show ip igmp settings

This field	Displays
Query Interval	How often the router will query an interface for group membership.

TABLE 28 Output of show ip igmp settings (continued)

This field	Displays
Configured Query Interval	The query interval that has been configured for the router.
Max Response Time	The length of time in seconds that the router will wait for an IGMP (V1 or V2) response from an interface before concluding that the group member on that interface is down and removing it from the group.
Group Membership Time	The length of time in seconds that a group will remain active on an interface in the absence of a group report.
Configured Version	The IGMP version configured on the router.
Operating Version	The IGMP version operating on the router.
Robustness Variable	The Robustness Variable allows tuning for the expected packet loss on a network. If a network is expected to be lossy, the Robustness Variable may be increased. IGMP is robust to (Robustness Variable -1) packet losses. The Robustness Variable must not be zero, and should not be one. Default: 2
Router Alert Check	IGMP (v2/v3) messages have a router-alert option in the IP header. By default this is validated by the router and it drops the packets without the router-alert option. If this check is disabled, IGMP messages without the router-alert option are accepted.
Last Member Query Interval	The Last Member Query Interval is the Max Response Time used to calculate the Max Resp Code inserted into Group-Specific Queries sent in response to Leave Group messages. It is also the Max Response Time used in calculating the Max Resp Code for Group-and-Source-Specific Query messages. Default: 10 (1 second)
Last Member Query Count	The Last Member Query Count is the number of Group-Specific Queries sent before the router assumes there are no local members. The Last Member Query Count is also the number of Group-and-Source-Specific Queries sent before the router assumes there are no listeners for a particular source. Default: the Robustness Variable.
Older Host Present Timer	The Older Host Present Interval is the time-out for transitioning a group back to IGMPv3 mode when an older version report is sent for that group. When an older version report is received, routers set their Older Host Present Timer to Older Host Present Interval. This value must be ((the Robustness Variable) times (the Query Interval)) plus (one Query Response Interval).
Maximum Group Address	This value indicates the maximum number of group address that can be accepted by the router.

Source-Specific Multicast

Using the Any-Source Multicast (ASM) service model, sources and receivers register with a multicast address. The protocol uses regular messages to maintain a correctly configured broadcast network where all sources can send data to all receivers and all receivers get broadcasts from all sources.

With Source-Specific Multicast (SSM), the "channel" concept is introduced where a "channel" consists of a single source and multiple receivers who specifically register to get broadcasts from that source. Consequently, receivers are not burdened with receiving data they have no interest in, and network bandwidth requirements are reduced because the broadcast need only go to a sub-set of users. The address range 232/8 has been assigned by the Internet Assigned Numbers Authority (IANA) for use with SSM.

IGMP V3 and Source Specific Multicast protocols

When IGMP V3 and PIM Sparse (PIM-SM) is enabled, the source specific multicast service (SSM) can be configured. SSM simplifies PIM-SM by eliminating the RP and all protocols related to the RP. IGMPv3 and PIM-SM must be enabled on any ports that you want SSM to operate.

Configuring PIM SSM group range

PIM Source Specific Multicast (SSM) is a subset of the PIM SM protocol. In PIM SSM mode, the shortest path tree (SPT) is created at the source. The SPT is created between the receiver and source, but the SPT is built without the help of the RP. The router closest to the interested receiver host is notified of the unicast IP address of the source for the multicast traffic. PIM SSM goes directly to the source-based distribution tree without the need of the RP connection. PIM SSM is different from PIM SM because it forms its own SPT, without forming a shared tree. The multicast address group range is 232.0.0.0/8.

To configure a single SSM group address, enter the following command under the router pim configuration:

```
device(config)#router pim
device(config-pim-router)#ssm-enable range 232.1.1.1/8
```

Syntax: [no] ssm-enable range *group-address address-mask*

The *group-address* parameter specifies the multicast address for the SSM address range. If this is not configured, the range will default to 232/8 as assigned by the Internet Assigned Numbers Authority (IANA) for use with SSM.

The *address-mask* parameter specifies the mask for the SSM address range.

To disable SSM, use the [no] form of this command.

Displaying source-specific multicast configuration information

To display PIM Sparse configuration information, use the **show ip pim sparse** command as described in Displaying basic PIM Sparse configuration information on page 101.

Configuring multiple SSM group ranges

The **ssm-enable range***acl-id/acl-name* command allows you to configure multiple SSM group ranges using an ACL.

Configuration Considerations

- The existing **ssm-enable range***group-addressaddress-mask* command will continue to exist.
- The ACL must be configured with the SSM group address in the permit clause of the **ssm-enable range***acl-id* or *acl-name* command. If the **ssm-enable range***group-addressaddress-mask* command permits a clause, then that group will also operate in the PIM-SM mode.
- If the **ssm-enable range***acl-id or acl-name* command is configured with a non-existent or empty ACL, then the SSM group will operate in PIM-SM mode (non PIM-SSM mode). However when an ACL is added or updated, then the group will exist in a PIM-SSM mode. By default, an empty ACL will deny all.
- By default, the group address mentioned in the IGMPv2 ssm-mapping ACL will decide if the group address is a PIM-SSM group or non PIM-SSM group. Therefore, if a user wants to prevent a group from operating in PIM-SSM mode, then the user's configuration must consistently deny the group in all configuration options for PIM-SSM range.
- ACL of any type (named or unnamed, standard or extended) can be used to specify the SSM group range. If an extended ACL is used, then the destination ip address should be used to specify the group address. Any configuration in the

source address of an extended ACL is ignored. Only permit statements are considered in the ACL configuration. Any deny statements in the ACL clause are also ignored.

To configure multiple SSM group address using an ACL, enter the following command under the router pim configuration:

```
device(config)#router pim
device(config-pim-router)#ssm-enable range xyz
```

The example displayed above configures PIM so that it uses the group addresses allowed by ACL, xyz as its PIM SSM range.

Syntax: [no] ssm-enable range *acl-id* **or** *acl-name*

The *acl-id/acl-name* parameter specifies the ACL id or name used to configure multiple SSM group ranges.

To disable the SSM mapping range ACL, use the [no] form of this command.

NOTE
The **ssm-enable range***acl-id acl-name* **or** command also supports IPv6 traffic. The **ssm-enable range***acl-id acl-name* **or** command must be configured under the IPv6 router pim configuration to support IPv6.

Displaying information for PIM SSM range ACL

To display information for PIM SSM range ACL configuration enter the following command at any CLI level:

```
device#show ip pim sparse
Global PIM Sparse Mode Settings
 Maximum Mcache          : 0          Current Count              : 0
  Hello interval         : 30          Neighbor timeout          : 105
  Join/Prune interval    : 60          Inactivity interval       : 180
  Register Suppress Time : 60          Register Probe Time       : 10
  SPT Threshold          : 1           Hardware Drop Enabled     : Yes
  Bootstrap Msg interval : 60          Candidate-RP Msg interval  : 60
  Register Stop Delay    : 60          Register Suppress interval : 60
  SSM Enabled            : Yes
  SSM Group Range        : 224.1.1.1/24
  SSM Group Range ACL    : xyz
  Route Precedence       : mc-non-default mc-default uc-non-default uc-default
```

NOTE
The **show ipv6 pim sparse** command also displays PIM SSM range ACL configuration.

IGMPv2 SSM mapping

The PIM-SSM feature requires all IGMP hosts to send IGMPv3 reports. Where you have an IGMPv2 host, this can create a compatibility problem. In particular, the reports from an IGMPv2 host contain a Group Multicast Address but do not contain source addresses. The IGMPv3 reports contain both the Group Multicast Address and one or more source addresses. This feature converts IGMPv2 reports into IGMPv3 reports through use of the **ip igmp ssm-map** commands and a properly configured ACL.

The ACL used with this feature filters for the Group Multicast Address. The ACL is then associated with one or more source addresses using the **ip igmp ssm-map** command. When the **ip igmp ssm-map enable** command is configured, IGMPv3 reports are sent for IGMPv2 hosts.

The following sections describe how to configure the ACL and the **ip igmp ssm-map** commands to use the IGMPv2 SSM mapping feature:

- Configuring an ACL for IGMPv2 SSM mapping
- Configuring the IGMPv2 SSM Mapping Commands

NOTE
IGMPv2 SSM Mapping is not supported for IGMP static groups.

Configuring an ACL for IGMPv2 SSM mapping

You can use either a standard or extended ACL to identify the group multicast address you want to add source addresses to when creating a IGMPv3 report.

For standard ACLs, you must create an ACL with a permit clause and the *ip-source-address* variable must contain the group multicast address. This can be configured directly with a subnet mask or with the **host** keyword in which case a subnet mask of all zeros (0.0.0.0) is implied.

In the following example, **access-list 20** is configured for the group multicast address: 224.1.1.0 with a subnet mask of 0.0.0.255.

```
device(config)# access-list 20 permit 224.1.1.0 0.0.0.225
```

In the following example, **access-list 20** is configured for the group multicast address: 239.1.1.1 by including the **host** keyword.

```
device(config)# access-list 20 host 239.1.1.1
```

For extended ACLs, the *source address* variable must contain either **000** or the **any** keyword. Additionally, the extended ACL must be configured with a **permit** clause and the host keyword. This can be configured directly with a subnet mask or with the **host** keyword in which case a subnet mask of all zeros (0.0.0.0) is implied.

The *ip-destination-address* variable must contain the group multicast address.

In the following example, **access-list 100** is configured for the group multicast address: 232.1.1.1 with a subnet mask of 0.0.0.255.

```
device(config)# access-list 20 permit 224.1.1.0 0.0.0.225
```

In the following example, **access-list 100** is configured for the group multicast address: 232.1.1.1.

```
device(config)# access-list 100 permit any host 232.1.1.1
```

Configuring the IGMPv2 SSM mapping commands

The **ip ssm-map** commands are used to enable the IGMPv2 mapping feature and to define the maps between IGMPv2 Group addresses and multicast source addresses as described in the following sections.

Enabling IGMPv2 SSM mapping

To enable the IGMPv2 mapping feature enter the command as shown in the following.

```
device(config)# ip igmp ssm-map enable
```

Syntax: [no] ip igmp ssm-map enable

The **no** option is used to turn off the IGMPv2 mapping feature that has previously been enabled.

Configuring the map between an IGMPv2 group address and a multicast source

To configure a map between an IGMPv2 Group address and a multicast source address use the **ip igmp ssm-map static** command, as shown in the following.

```
device(config)# ip igmp ssm-map 20 1.1.1.1
```

Syntax: [no] ip igmp ssm-map *aci-id source-address*

The *acl-id* variable specifies the ACL ID that contains the group multicast address.

The *source-address* variable specifies the source address that you want to map to the group multicast address specified in the ACL.

The **no** option is used to delete a previously configured SSM map.

Example configuration

In the following example configuration, one extended ACL and two standard ACLs are defined with group multicast addresses. The **ip igmp ssm-map** commands are configured to map the ACLs to source addresses and to enable the feature on the router.

```
device(config)# access-list 20 host 239.1.1.1
device(config)# access-list 20 permit 224.1.1.0 0.0.0.225
device(config)# access-list 100 permit any host 232.1.1.1
device(config)# ip igmp ssm-map 20 1.1.1.1
device(config)# ip igmp ssm-map 20 2.2.2.2
device(config)# ip igmp ssm-map 100 1.1.1.1
device(config)# ip igmp ssm-map enable
```

Displaying an IGMP SSM mapping information

The **show ip igmp ssm-map** command displays the association between a configured ACL and source address mapped to it, as shown in the following.

```
device# show ip igmp ssm-map
+---------+-----------------+
| Acl id  | Source Address  |
+---------+-----------------+
        20          1.1.1.1
       100          1.1.1.1
        20          2.2.2.2
        20          2.2.2.3
        20          2.2.2.4
        20          2.2.2.5
        20          2.2.2.6
```

Syntax: show ip igmp [**vrf** *vrf-name*] **ssm-map**

The **show ip igmp ssm-map** *group-address* displays the ACL ID that has the specified multicast group address in its permit list and lists the source addresses mapped to the specified multicast group address, as shown in the following.

```
device# show ip igmp ssm-map 232.1.1.1
+---------+-----------------+
| Acl id  | Source Address  |
+---------+-----------------+
        20          1.1.1.1
       100          1.1.1.1
        20          2.2.2.2
        20          2.2.2.3
        20          2.2.2.4
        20          2.2.2.5
        20          2.2.2.6
```

Syntax: show ip igmp ssm-map *group-address*

IPv6 Multicast Protocols

- IPv6 PIM Sparse 155
- IPv6 PIM convergence on MAC movement 184
- PIM Anycast RP 184
- Multicast Listener Discovery and source-specific multicast protocols 187
- IPv6 Multicast Boundaries 196

IPv6 PIM Sparse

IPv6 Protocol Independent Multicast (PIM) Sparse is supported. IPv6 PIM Sparse provides multicasting that is especially suitable for widely distributed multicast environments.

In an IPv6 PIM Sparse network, an IPv6 PIM Sparse router that is connected to a host that wants to receive information for a multicast group must explicitly send a join request on behalf of the receiver (host).

FIGURE 11 Example IPv6 PIM Sparse domain

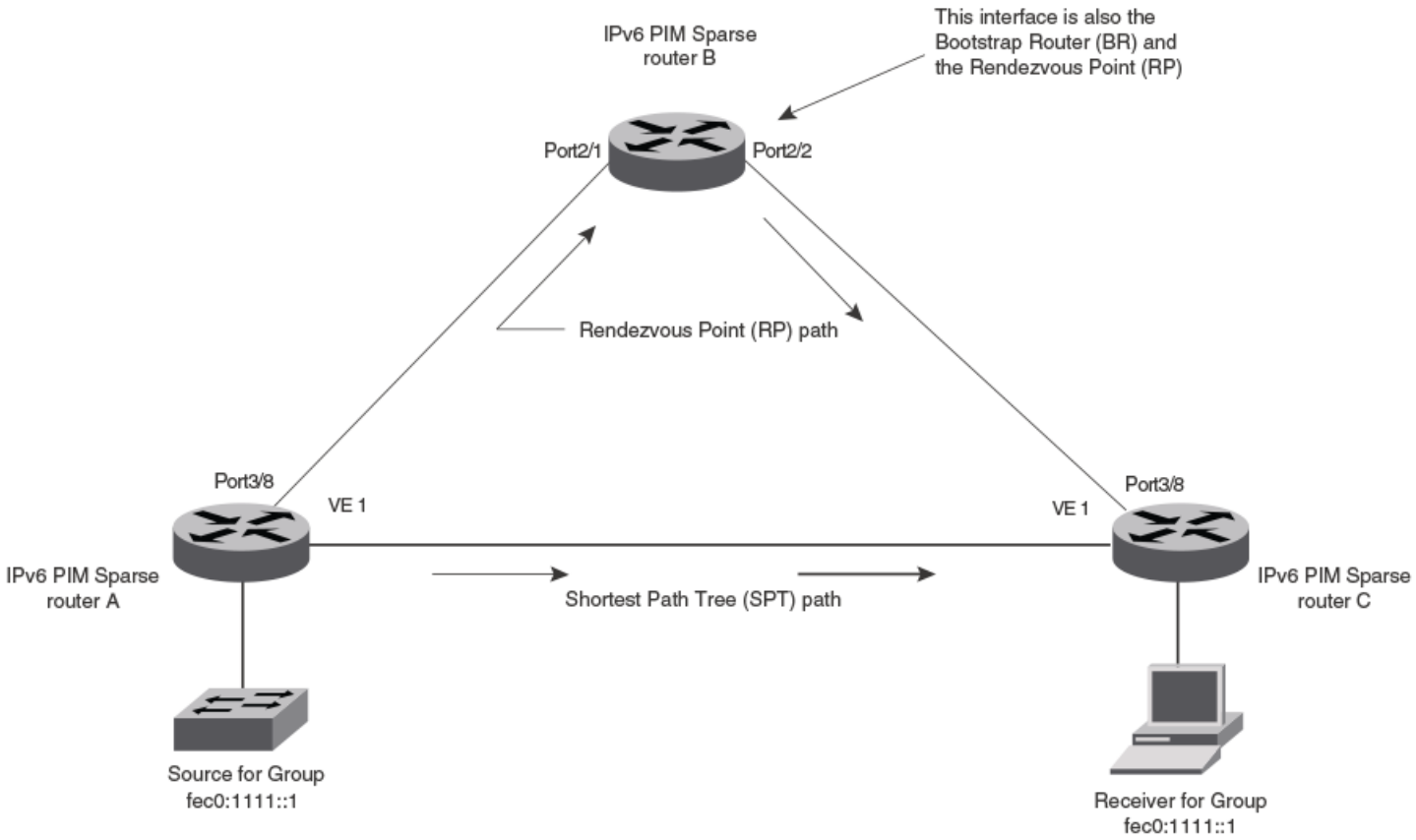

PIM Sparse router types

Routers that are configured with PIM Sparse interfaces also can be configured to fill one or more of the following roles:

- BSR - The Bootstrap Router (BSR) distributes RP information to the other PIM Sparse routers within the domain. Each PIM Sparse domain has one active BSR. For redundancy, you can configure ports on multiple routers as candidate BSRs. The PIM Sparse protocol uses an election process to select one of the candidate BSRs as the BSR for the domain. The BSR with the highest BSR priority (a user-configurable parameter) is elected. If the priorities result in a tie, then the candidate BSR interface with the highest IP address is elected. In the example in Figure 11 on page 155, PIM Sparse router B is the BSR. Port 1/2/2 is configured as a candidate BSR.
- RP - The Rendezvous Point (RP) is the meeting point for PIM Sparse sources and receivers. A PIM Sparse domain can have multiple RPs, but each PIM Sparse multicast group address can have only one active RP. PIM Sparse routers learn the addresses of RPs and the groups for which they are responsible from messages that the BSR sends to each of the PIM Sparse routers. In the example in Figure 11 on page 155, PIM Sparse router B is the RP. Port 1/2/2 is configured as a candidate Rendezvous Point (RP).

To enhance overall network performance, the device uses the RP to forward only the first packet from a group source to the group receivers. After the first packet, the device calculates the shortest path between the receiver and the source (the Shortest Path Tree, or SPT) and uses the SPT for subsequent packets from the source to the receiver. The device calculates a separate SPT for each source-receiver pair.

NOTE
It is recommended that you configure the same ports as candidate BSRs and RPs.

RP paths and SPT paths

Figure 11 on page 155 shows two paths for packets from the source for group fec0:1111::1 and a receiver for the group. The source is attached to PIM Sparse router A and the recipient is attached to PIM Sparse router C. PIM Sparse router B is the RP for this multicast group. As a result, the default path for packets from the source to the receiver is through the RP. However, the path through the RP sometimes is not the shortest path. In this case, the shortest path between the source and the receiver is over the direct link between router A and router C, which bypasses the RP (router B).

To optimize PIM traffic, the protocol contains a mechanism for calculating the Shortest Path Tree (SPT) between a given source and a receiver. PIM Sparse routers can use the SPT as an alternative to using the RP for forwarding traffic from a source to a receiver. By default, the device forwards the first packet it receives from a given source to a given receiver using the RP path, but subsequent packets from that source to that receiver through the SPT. In Figure 11 on page 155, router A forwards the first packet from group fec0:1111::1 source to the destination by sending the packet to router B, which is the RP. Router B then sends the packet to router C. For the second and all future packets that router A receives from the source for the receiver, router A forwards them directly to router C using the SPT path.

RFC 3513 and RFC 4007 compliance for IPv6 multicast scope-based forwarding

The IPv6 multicast implementation recognizes scopes and conforms to the scope definitions in RFC 3513. Per RFC 3513, scopes 0 and 3 are reserved and packets are not forwarded with an IPv6 destination multicast address of scopes 0 and 3. Additionally, scopes 1 and 2 are defined as Node-Local and Link-Local and are not forwarded. Thus, the implementation forwards only those packets with an IPv6 multicast destination address with scope 4 or higher.

RFC 4007 defines 'scope zones' and requires that the forwarding of packets received on any interface of a particular scope zone be restricted to that scope zone. Currently, the device supports one zone for each scope, and the default zone for scope 4 and higher consists of all interfaces in the system. Thus, the default zones for scope 4 and higher are the same size.

Configuring PIM Sparse

To configure the device for IPv6 PIM Sparse, perform the following tasks:

- Enable the IPv6 PIM Sparse of multicast routing.
- Configure VRF then enable IPv6 Protocol Independent Multicast Sparse mode (PIM-SM) for a specified VRF, if applicable.
- Configure an IPv6 address on the interface.
- Enable IPv6 PIM Sparse.
- Identify the interface as an IPv6 PIM Sparse border, if applicable.
- Identify the device as a candidate PIM Sparse Bootstrap Router (BSR), if applicable.
- Identify the device as a candidate PIM Sparse Rendezvous Point (RP), if applicable.
- Specify the IP address of the RP (if you want to statically select the RP).

  NOTE
  It is recommended that you configure the same device as both the BSR and the RP.

IPv6 PIM-Sparse mode

To configure a device for IPv6 PIM Sparse, perform the following tasks:

- Identify the Layer 3 switch as a candidate sparse Rendezvous Point (RP), if applicable.
- Specify the IPv6 address of the RP (to configure statically).

The following example enables IPv6 PIM-SM routing. Enter the following command at the configuration level to enable IPv6 PIM-SM globally.

```
device(config)# ipv6 router pim
device(config-ipv6-pim-router)#
```

To enable IPv6 PIM Sparse mode on an interface, enter commands such as the following.

```
device(config)# interface ethernet 1/2/2
device(config-if-e10000-1/2/2)# ipv6 address a000:1111::1/64
device(config-if-e10000-1/2/2)# ipv6 pim-sparse
```

Syntax: [no] ipv6 pim-sparse

Use the **no** option to remove IPv6 PIM sparse configuration from the interface.

The commands in this example add an IPv6 interface to port 1/2/2, then enable IPv6 PIM Sparse on the interface.

Configuring IPv6 PIM-SM on a virtual routing interface

You can enable IPv6 PIM-SM on a virtual routing interface by entering commands such as the following.

```
device(config)# interface ve 15
device(config-vif-15)# ipv6 address a000:1111::1/64
device(config-vif-15)# ipv6 pim-sparse
```

Enabling IPv6 PIM-SM for a specified VRF

To enable IPv6 PIM-SM for the VRF named "blue", create the VRF named "blue", enable it for IPv6 routing, and then enable IPv6 PIM-SM for the VRF, as shown in the following example.

```
device(config)# vrf blue
device(config-vrf-blue)# rd 11:1
device(config-vrf-blue)# address-family ipv6
device(config-vrf-blue-ipv6)# router pim
device(config-pim-router)# ipv6 router pim vrf blue
device(config-ipv6-pim-router-vrf-blue)
```

Syntax: [no] ipv6 router pim [**vrf** *vrf-name*]

The **vrf** parameter allows you to configure IPv6 PIM-SM on the virtual routing instance (VRF) specified by the *vrf-name* variable. All PIM parameters available for the default router instance are configurable for a VRF-based PIM instance.

Use the **no** option to remove all configuration for PIM multicast on the specified VRF.

Configuring BSRs

In addition to the global and interface parameters configured in the prior sections, you must identify an interface on at least one device as a candidate PIM Sparse bootstrap router (BSR) and a candidate PIM Sparse rendezvous point (RP).

> **NOTE**
> You can configure the device as only a candidate BSR or an RP, but it is recommended that you configure the same interface on the same device as both a BSR and an RP.

To configure the device as a candidate BSR, enter commands such as the following.

```
Device(config)# ipv6 router pim
Device(config-ip6-pim-router)# bsr-candidate ethernet 1/1/3 32 64
```

This command configures Ethernet interface 1/1/3 as the BSR candidate with a mask length of 32 and a priority of 64.

To configure the device as a candidate BSR for a specified VRF, enter the commands as shown in the following example.

```
Device(config)# ipv6 router pim vrf blue
Device(config-ipv6-pim-router-vrf-blue)# bsr-candidate ethernet 1/1/3 32 64
```

Syntax: [no] bsr-candidate { **ethernet** *unit/slot/port* | **loopback** *num* | **ve** *num* | **tunnel** *num* } *hash-mask-length* [*priority*]

Use the **no** form of the command to remove the candidate BSR configuration for a specified VRF.

The **ethernet** *unit/slot/port*, **loopback** *num*, **ve** *num*, and **tunnel** *num* parameters specify the interface. The device will advertise the IP address of the specified interface as a candidate BSR.

- Enter **ethernet** *unit/slot/port* for a physical interface (port).
- Enter **ve** *num* for a virtual interface.
- Enter **loopback** *num* for a loopback interface.
- Enter **tunnel** *num* for a GRE tunnel interface.

The *hash-mask-length* variable specifies the number of bits in a group address that are significant when calculating the group-to-RP mapping. You can specify a value from 1 through 32.

The *priority* variable specifies the BSR priority. You can specify a value from 0 through 255. When the election process for BSR takes place, the candidate BSR with the highest priority becomes the BSR. The default is 0.

Setting the BSR message interval

The BSR message interval timer defines the interval at which the BSR sends RP candidate data to all IPv6-enabled routers within the IPv6 PIM Sparse domain. The default is 60 seconds.

To set the IPv6 PIM BSR message interval timer to 16 seconds, enter commands such as the following.

```
device(config)# ipv6 router pim
device(config-ipv6-pim-router)# bsr-msg-interval 16
```

To set the IPv6 PIM BSR message interval timer to 16 seconds for a specified VRF, enter the commands as shown in the following example.

```
device(config)# ipv6 router pim vrf blue
device(config-ipv6-pim-router-vrf-blue)# bsr-msg-interval 16
```

Syntax: [no] bsr-msg-interval *num*

The *num* parameter specifies the number of seconds and can be from 10 - 65535. The default is 60.

Use the **no** option to disable a timer that has been configured.

Configuring candidate RP

Enter a command such as the following to configure the device as a candidate RP.

```
Device(config)# ipv6 router pim
Device(config-ipv6-pim-router)# rp-candidate ethernet 1/2/2
```

To configure the device as a candidate RP for a specified VRF, enter the commands as shown in the following example.

```
Device(config)# ipv6 router pim vrf blue
Device(config-ipv6-pim-router-vrf-blue)# rp-candidate ethernet 1/2/2
```

Syntax: [no] rp-candidate { **ethernet** *unit/slot/port* | **loopback** *num* | **ve** *num* | **tunnel** *num* }

The **ethernet** *unit/slot/port*, **loopback** *num*, **ve** *num*, and **tunnel** *num* parameters specify the interface. The device will advertise the specified interface IP address as a candidate RP.

- Enter **ethernet** *unit/slot/port* for a physical interface (port).
- Enter **loopback** *num* for a loopback interface.
- Enter **ve** *num* for a virtual interface.
- Enter **tunnel** *num* for a GRE tunnel interface.

To add address ranges for which the device is a candidate RP, enter commands such as the following.

```
Device(config)# ipv6 router pim
Device(config-ipv6-pim-router)# rp-candidate add ff02::200:2 64
```

To add address ranges for a specified VRF for which the device is a candidate RP, enter commands such as the following.

```
Device(config)# ipv6 router pim vrf blue
Device(config-ipv6-pim-router-vrf-blue)# rp-candidate add ff02::200:2 64
```

Syntax: [no] rp-candidate add *group-ipv6address mask-bits*

You can delete the configured RP candidate group ranges by entering commands such as the following.

```
Device(config)# ipv6 router pim
Device(config-ipv6-pim-router)# rp-candidate delete ff02::200:1 128
```

You can delete the configured RP candidate group ranges for a specified VRF by entering commands such as the following:

```
Device(config)# ipv6 router pim vrf blue
Device(config-ipv6-pim-router-vrf-blue)# rp-candidate delete ff02::200:1 128
```

Syntax: [n]o rp-candidate delete *group-ipv6address mask-bits*

The usage for the *group-ipv6address mask-bits* parameter is the same as for the **rp-candidate add** command.

Statically specifying the RP

It is recommended that you use the IPv6 PIM Sparse mode RP election process so that a backup RP can automatically take over if the active RP router becomes unavailable. However, if you do not want the RP to be selected by the RP election process but instead you want to explicitly identify the RP by its IPv6 address, use the **rp-address** command.

If you explicitly specify the RP, the device uses the specified RP for all group-to-RP mappings and overrides the set of candidate RPs supplied by the BSR.

> **NOTE**
> Specify the same IP address as the RP on all IPv6 PIM Sparse routers within the IPv6 PIM Sparse domain. Make sure the device is on the backbone or is otherwise well-connected to the rest of the network.

To specify the IPv6 address of the RP, enter commands such as the following.

```
device(config)# ipv6 router pim
device(config-ipv6-pim-router)# rp-address 31::207
```

The command in the previous example identifies the router interface at IPv6 address 31:207 as the RP for the IPv6 PIM Sparse domain. The device will use the specified RP and ignore group-to-RP mappings received from the BSR.

To specify the IPv6 address of the RP for a specified VRF, enter commands such as the following.

```
device(config)# ipv6 router pim vrf blue
device(config-ipv6-pim-router-vrf-blue)# rp-address 31::207
```

Syntax: [no] rp-address *ipv6-addr*

The *ipv6-addr* parameter specifies the IPv6 address of the RP.

Updating IPv6 PIM Sparse forwarding entries with a new RP configuration

If you make changes to your static RP configuration, the entries in the IPv6 PIM Sparse multicast forwarding table continue to use the old RP configuration until they are aged out.

The **clear IPv6 pim rp-map** command allows you to update the entries in the static multicast forwarding table immediately after making RP configuration changes. This command is meant to be used with the **rp-address** command.

To update the entries in an IPv6 PIM Sparse static multicast forwarding table with a new RP configuration, enter the following command at the privileged EXEC level of the CLI.

```
device(config)# clear ipv6 pim rp-map
```

Syntax: clear ipv6 pim [**vrf** *vrf_name*] **rp-map**

Embedded Rendezvous Point

Global deployment of IPv4 multicast relies on Multicast Source Discovery Protocol (MSDP) to convey information about the active sources. Because IPv6 provides more address space, the RP address can be included in the multicast group address.

NOTE
The IPv6 group address must be part of the FF70:/12 prefix.

Embedded RP support is enabled by default. You can disable it using the following commands.

```
device(config)# ipv6 router pim
device(config-ipv6-pim-router)# no rp-embedded
```

To disable embedded RP support for a specified VRF, enter the following commands.

```
device(config)# ipv6 router pim vrf blue
device(config-ipv6-pim-router-vrf-blue)# no rp-embedded
```

Syntax: [no] rp-embedded

Changing the Shortest Path Tree threshold

In a typical IPv6 PIM Sparse domain, there may be two or more paths from a designated router (DR) for a multicast source to an IPv6 PIM group receiver:

- Path through the RP - This is the path the device uses the first time it receives traffic for an IPv6 PIM group. However, the path through the RP may not be the shortest path from the device to the receiver.
- Shortest Path - Each IPv6 PIM Sparse router that is a DR for an IPv6 receiver calculates a short path tree (SPT) towards the source of the IPv6 multicast traffic. The first time the device configured as an IPv6 PIM router receives a packet for an IPv6 group, it sends the packet to the RP for that group, which in turn will forward it to all the intended DRs that have registered with the RP. The first time the device is a recipient, it receives a packet for an IPv6 group and evaluates the shortest path to the source and initiates a switchover to the SPT. Once the device starts receiving data on the SPT, the device proceeds to prune itself from the RPT.

By default, the device switches from the RP to the SPT after receiving the first packet for a given IPv6 PIM Sparse group. The device maintains a separate counter for each IPv6 PIM Sparse source-group pair.

You can change the number of packets the device receives using the RP before switching to using the SPT.

To change the number of packets the device receives using the RP before switching to the SPT, enter commands such as the following.

```
device(config)# ipv6 router pim
device(config-ipv6-pim-router)# spt-threshold 1000
```

To change the number of packets the device receives using the RP before switching to the SPT for a specified VRF, enter commands such as the following.

```
device(config)# ipv6 router pim vrf blue
device(config-ipv6-pim-router-vrf-blue)# spt-threshold 1000
```

Syntax: [no] spt-threshold *num*

The *num* parameter specifies the number of packets. If you enter a specific number of packets, the device does not switch over to using the SPT until it has sent the number of packets you specify using the RP.

Setting the RP advertisement interval

To specify how frequently the candidate RP configured on the device sends candidate RP advertisement messages to the BSR, enter commands such as the following.

```
device(config)# ipv6 router pim
device(config-ipv6-pim-router)# rp-adv-interval 180
```

To specify how frequently the candidate RP configured on the device sends candidate RP advertisement messages to the BSR for a specified VRF, enter commands such as the following.

```
device(config)# ipv6 router pim vrf blue
device(config-ipv6-pim-router-vrf-blue)# rp-adv-interval 180
```

Syntax: rp-adv-interval *seconds*

The *seconds* parameter specifies the number of seconds in a range from 10 through 65535. The default is 60 seconds.

Changing the PIM Join and Prune message interval

By default, the device sends PIM Sparse Join or Prune messages every 60 seconds. These messages inform other PIM Sparse routers about clients who want to become receivers (Join) or stop being receivers (Prune) for PIM Sparse groups.

> **NOTE**
> Use the same Join or Prune message interval on all the PIM Sparse routers in the PIM Sparse domain. If the routers do not all use the same timer interval, the performance of PIM Sparse can be adversely affected.

To change the Join or Prune interval, enter commands such as the following:

```
Device(config)# ipv6 router pim
Device(config-ipv6-pim-router)# message-interval 30
```

To change the Join or Prune interval for a specified VRF, enter the commands as shown in the following example:

```
Device(config)# ipv6 router pim vrf blue
Device(config-ipv6-pim-router-vrf-blue)# message-interval 30
```

Syntax: [no] message-interval *seconds*

The *seconds* parameter specifies the number of seconds and can be from 10 through 18724 seconds. The default is 60 seconds.

Modifying neighbor timeout

Neighbor timeout is the interval after which a PIM router will consider a neighbor to be absent. If the timer expires before receiving a new hello message, the PIM router will time out the neighbor.

To apply an IPv6 PIM neighbor timeout value of 50 seconds to all ports on the router operating with PIM, enter the commands such as the following.

```
device(config)# ipv6 router pim
device(config-ipv6-pim-router)# nbr-timeout 50
```

To apply an IPv6 PIM neighbor timeout value of 50 seconds for a specified VRF operating with PIM, enter the commands such as the following.

```
device(config)# ipv6 router pim vrf blue
device(config-ipv6-pim-router-vrf-blue)# nbr-timeout 50
```

Syntax: [no] nbr-timeout *seconds*

The *seconds* parameter specifies the number of seconds. The valid range is from 35 through 65535 seconds. The default is 105.

Setting the prune wait interval

The **prune-wait** command allows you to set the amount of time the PIM router should wait for a join override before pruning an Outgoing Interface List Optimization (OIF) from the entry.

To change the default join override time to 2 seconds, enter commands such as the following.

```
device(config)# ipv6 router pim
device(config-ipv6-pim-router)# prune-wait 2
```

To change the default join override time to 2 seconds for a specified VRF, enter commands such as the following.

```
device(config)# ipv6 router pim vrf blue
device(config-ipv6-pim-router-vrf-blue)# prune-wait 2
```

Syntax: [no] prune-wait *seconds*

The *seconds* parameter specifies the number of seconds. The valid range is from 0 through 30 seconds. The default is 3 seconds.

Setting the register suppress interval

The **register-suppress-time** command allows you to set the amount of time the PIM router uses to periodically trigger the NULL register message.

> **NOTE**
> The register suppress time configuration applies only to the first hop PIM router.

To change the default register suppress time to 90 seconds, enter commands such as the following:

```
device(config)# ipv6 router pim
device(config-ipv6-pim-router)# register-suppress-time 90
```

To change the default register suppress time to 90 seconds for a specified VRF, enter commands such as the following:

```
device(config)# ipv6 router pim vrf blue
device(config-ipv6-pim-router-vrf-blue)# register-suppress-time 90
```

Syntax: [no] register-suppress-time *seconds*

The *seconds* parameter specifies the number of seconds. The valid range is from 60 through 120 seconds. The default is 60 seconds.

Setting the register probe time

The **register-probe-time** command allows you to set the amount of time the PIM router waits for a register-stop from an RP before it generates another NULL register to the PIM RP. The register probe time configuration applies only to the first hop PIM router.

> **NOTE**
> Once a PIM first hop router successfully registers with a PIM RP, the PIM first hop router will not default back to the data registration. All subsequent registers will be in the form of the NULL registration.

To change the default register probe time to 20 seconds, enter commands such as following.

```
device(config)# ipv6 router pim
device(config-ipv6-pim-router)# register-probe-time 20
```

To change the default register probe time to 20 seconds for a specified VRF, enter commands such as the following.

```
device(config)# ipv6 router pim vrf blue
device(config-ipv6-pim-router-vrf-blue)# register-probe-time 20
```

Syntax: [no] register-probe-time *seconds*

The *seconds* parameter specifies the number of seconds. The valid range is from 10 through 50 seconds. The default is 10 seconds.

Setting the inactivity timer

The router deletes a forwarding entry if the entry is not used to send multicast packets. The IPv6 PIM inactivity timer defines how long a forwarding entry can remain unused before the router deletes it.

To apply an IPv6 PIM inactivity timer of 160 seconds to all IPv6 PIM interfaces, enter the following.

```
device(config)# ipv6 router pim
device(config-ipv6-pim-router)# inactivity-timer 160
```

To apply an IPv6 PIM inactivity timer of 160 seconds for a specified VRF, enter the commands as shown in the following example.

```
device(config)# ipv6 router pim vrf blue
device(config-ipv6-pim-router-vrf-blue)# inactivity-timer 160
```

Syntax: [no] inactivity-timer *seconds*

The *seconds* parameter specifies the number of seconds. The valid range is 60 through 3600 seconds. The default is 180 seconds.

> **NOTE**
> The inactivity timer configured may expire with a delay of 0 to 60 seconds.

Changing the hello timer

The hello timer defines the interval at which periodic hellos are sent out to PIM interfaces. Routers use hello messages to inform neighboring routers of their presence. To change the hello timer, enter a command such as the following.

```
device(config)# ipv6 router pim
device(config-ipv6-pim-router)# hello-timer 62
```

To change the hello timer for a specified VRF, enter the commands as shown in the following example.

```
device(config)# ipv6 router pim vrf blue
device(config-ipv6-pim-router-vrf-blue)# hello-timer 62
```

Syntax: [n]o hello-timer *seconds*

The *seconds* parameter specifies the number of seconds. The valid range is 10 through 3600 seconds. The default is 30 seconds.

Enabling Source-Specific Multicast

Using the Any-Source Multicast (ASM) service model, sources and receivers register with a multicast address. The protocol uses regular messages to maintain a correctly configured broadcast network where all sources can send data to all receivers and all receivers get broadcasts from all sources.

With Source-Specific Multicast (SSM), the "channel" concept is introduced where a "channel" consists of a single source and multiple receivers that specifically register to get broadcasts from that source. Consequently, receivers are not burdened with receiving data they have no interest in, and network bandwidth requirements are reduced because the broadcast need only go to a subset of users. The address range ff30:/12 has been assigned by the Internet Assigned Numbers Authority (IANA) for use with SSM.

SSM simplifies IPv6 PIM-SM by eliminating the RP and all protocols related to the RP.

Configuring Source-Specific Multicast

IPv6 PIM-SM must be enabled on any ports on which you want SSM to operate. Enter the **ssm-enable** command under the IPv6 router PIM level to globally enable SSM filtering.

```
device(config)# ipv6 router pim
device(config-ipv6-pim-router)# ssm-enable
```

To enable SSM for a specified VRF and user-defined address range, enter the commands as shown in the following.

```
device(config)# ipv6 router pim vrf blue
device(config-ipv6-pim-router-vrf-blue)# ssm-enable ff44::/32
```

Syntax: [no] ssm-enable [**range** *address-range*]

The **range** *address-range* option allows you to define the SSM range of IPv6 multicast addresses.

Configuring a DR priority

The DR priority option lets a network administrator give preference to a particular router in the DR election process by giving it a numerically higher DR priority. To set a DR priority higher than the default value of 1, use the **ipv6 pim dr-priority** command as shown in the example below.

```
device(config-if-e10000-3/2/4)# ipv6 pim dr-priority 50
```

To set a DR priority higher than the default value of 1 on a virtual Ethernet interface, use the **ipv6 pim dr-priority command** as shown in the following.

```
device(config)# interface ve 10
device(config-vif-10)# ipv6 pim dr-priority 50
```

Syntax: [no] ipv6 pim dr-priority *priority-value*

The *priority-value* variable is the value that you want to set for the DR priority. The range of values is from 0 through 65535. The default value is 1.

The **no** option removes the command and sets the DR priority back to the default value of 1.

The following information may be useful for troubleshooting:

- If more than one router has the same DR priority on a subnet (as in the case of default DR priority on all), the router with the numerically highest IP address on that subnet will get elected as the DR.
- The DR priority information is used in the DR election only if all the PIM routers connected to the subnet support the DR priority option. If there is at least one PIM router on the subnet that does not support this option, then the DR election falls back to the backwards compatibility mode in which the router with the numerically highest IP address on the subnet is declared the DR regardless of the DR priority values.

Passive Multicast Route Insertion

To prevent unwanted multicast traffic from being sent to the CPU, IPv6 PIM routing and Passive Multicast Route Insertion (PMRI) can be used together to ensure that multicast streams are only forwarded out ports with interested receivers and unwanted traffic is dropped in hardware on Layer 3 routers.

PMRI enables a Layer 3 switch running IPv6 PIM Sparse to create an entry for a multicast route (for example, (S,G)), with no directly attached clients or when connected to another PIM router (transit network).

When a multicast stream has no output interfaces, the Layer 3 switch can drop packets in hardware if the multicast traffic meets the following conditions in IPv6 PIM-SM.

- The route has no OIF.
- The directly connected source passes source RPF check and completes data registration with the RP, or the non-directly connected source passes source RPF check.

If the OIF is inserted after the hardware-drop entries are installed, the hardware entries will be updated to include the OIFs.

NOTE
Disabling hardware-drop does not immediately take away existing hardware-drop entries, they will go through the normal route aging processing when the traffic stops.

Configuring PMRI

PMRI is enabled by default. To disable PMRI, enter the following commands.

```
device(config)# ipv6 router pim
device(config-ipv6-pim-router)# hardware-drop-disable
```

To disable PMRI for a specified VRF, enter the commands as shown in the following example.

```
device(config)# ipv6 router pim vrf blue
device(config-ipv6-pim-router-vrf-blue)# hardware-drop-disable
```

Syntax: [no] hardware-drop-disable

Displaying hardware-drop

Use the **show ipv6 pim sparse** command to display if the hardware-drop feature has been enabled or disabled.

```
device# show ipv6 pim sparse

Global PIM Sparse Mode Settings
  Maximum Mcache          : 4096        Current Count              : 7
  Hello interval          : 30          Neighbor timeout           : 105
  Join/Prune interval     : 60          Inactivity interval        : 180
  Hardware Drop Enabled   : Yes         Prune Wait Interval        : 3
  Bootstrap Msg interval  : 60          Candidate-RP Msg interval  : 60
  Register Suppress Time  : 60          Register Probe Time        : 10
  Register Stop Delay     : 10          Register Suppress interval : 60
  SSM Enabled             : Yes         SPT Threshold              : 1
  SSM Group Range         : ff3x::/32
  Route Precedence        : mc-non-default mc-default uc-non-default uc-default
  Embedded RP Enabled     : Yes
```

Displaying system values

To display default, maximum, current, and configured values for system maximum parameters, use the **show default values** command. The following output example does not show complete output; it shows only PIM6 hardware mcache values.

```
device(config)#show default values
System Parameters     Default    Maximum    Current    Configured
pim6-hw-mcache        512        1024       1024       1024
```

Displaying PIM Sparse configuration information and statistics

You can display the following PIM Sparse information:

- Basic PIM Sparse configuration information
- IPv6 interface information
- Group information
- BSR information
- Candidate RP information
- RP-to-group mappings
- RP information for an IPv6 PIM Sparse group
- RP set list
- Multicast neighbor information
- The IPv6 PIM multicast cache
- IPv6 PIM RPF
- IPv6 PIM counters
- IPv6 PIM resources
- IPv6 PIM traffic statistics

Displaying basic PIM Sparse configuration information

Enter the **show ipv6 pim sparse** command at any CLI level to display IPv6 PIM Sparse configuration information.

```
device# show ipv6 pim sparse

Global PIM Sparse Mode Settings
  Maximum Mcache         : 4096        Current Count              : 7
  Hello interval         : 30          Neighbor timeout           : 105
  Join/Prune interval    : 60          Inactivity interval        : 180
  Hardware Drop Enabled  : Yes         Prune Wait Interval        : 3
  Bootstrap Msg interval : 60          Candidate-RP Msg interval  : 60
  Register Suppress Time : 60          Register Probe Time        : 10
  Register Stop Delay    : 10          Register Suppress interval : 60
  SSM Enabled            : Yes         SPT Threshold              : 1
  SSM Group Range        : ff30::/32
  Route Precedence       : mc-non-default mc-default uc-non-default uc-default
  Embedded RP Enabled    : Yes
```

Syntax: show ipv6 pim [**vrf** *vrf-name*] **sparse**

The **vrf** parameter allows you to configure IPv6 PIM on the virtual routing instance (VRF) specified by the *vrf-name* variable.

The following table displays the output from the **show ipv6 pim sparse** command.

TABLE 29 Output from the show ipv6 pim sparse command

Field	Description
Global PIM Sparse mode settings	
Maximum mcache	Maximum number of multicast cache entries.
Current Count	Number of multicast cache entries used.
Hello interval	How frequently the device sends IPv6 PIM Sparse hello messages to its IPv6 PIM Sparse neighbors. This field shows the number of seconds between hello messages. IPv6 PIM Sparse routers use hello messages to discover one another.

TABLE 29 Output from the show ipv6 pim sparse command (continued)

Field	Description
Neighbor timeout	Number of seconds the device waits for a hello message from a neighbor before determining that the neighbor is no longer present and is not removing cached IPv6 PIM Sparse forwarding entries for the neighbor. Default is 105 seconds.
Join or Prune interval	How frequently the device sends IPv6 PIM Sparse Join or Prune messages for the multicast groups it is forwarding. This field shows the number of seconds between Join or Prune messages. The device sends Join or Prune messages on behalf of multicast receivers that want to join or leave an IPv6 PIM Sparse group. When forwarding packets from IPv6 PIM Sparse sources, the device sends the packets only on the interfaces on which it has received join requests in Join or Prune messages for the source group.
Inactivity interval	Number of seconds a forwarding entry can remain unused before the router deletes it. Default is 180 sec.
Hardware Drop Enabled	Indicates whether hardware drop is enabled or disabled. To prevent unwanted multicast traffic from being sent to the CPU, PIM Routing and Passive Multicast Route Insertion (PMRI) can be used together to ensure that multicast streams are only forwarded out ports with interested receivers and unwanted traffic is dropped in the hardware on Layer 3 Switches.
Prune Wait Interval	Number of seconds a PIM device waits before stopping traffic to neighbor devices that do not want the traffic. Range is from zero to three seconds. Default is three seconds.
Bootstrap Msg interval	How frequently the BSR configured on the device sends the RP set to the RPs within the IPv6 PIM Sparse domain. The RP set is a list of candidate RPs and their group prefixes. The group prefix of a candidate RP indicates the range of IPv6 PIM Sparse group numbers for which it can be an RP. **NOTE** This field contains a value only if an interface on the device is elected to be the BSR. Otherwise, the field is blank.
Candidate-RP Msg interval	Number of seconds the candidate RP configured on the Layer 3 switch sends candidate RP advertisement messages to the BSR. Default is 60 seconds.
Register Suppress Time	This is the mean interval between receiving a Register-Stop and allowing registers to be sent again. A lower value means more frequent register bursts at RP, while a higher value means longer join latency for new receivers. Default: 60 seconds.
Register Probe Time	Number of seconds the PIM router waits for a register-stop from an RP before it generates another NULL register to the PIM RP. Default is 10 seconds.
Register Stop Delay	Register stop message. Default is 10 seconds.
Register Suppress interval	Number of seconds that it takes the designated router to send Register-encapsulated data to the RP after receiving a Register-Stop message. Default is 60 seconds.
SSM Enabled	If yes, source-specific multicast is configured globally on this router.
SPT threshold	Number of packets the device sends using the path through the RP before switching to the SPT path. Default is 1 packet.
SSM Group Range	Source-specific multicast group range.

TABLE 29 Output from the show ipv6 pim sparse command (continued)

Field	Description
Route Precedence	The route precedence configured to control the selection of routes based on the four route types: • Non-default route from the mRTM • Default route from the mRTM • Non-default route from the uRTM • Default route from the uRTM
Embedded RP Enabled	Indicates whether the embedded RP is enabled or disabled.

Displaying IPv6 PIM interface information

You can display IPv6 PIM multicast interface information using the **show ipv6 pim interface** command.

```
device# show ipv6 pim interface ethernet 1/1/7
Flags     : SM  - Sparse Mode v2
---------+-----------------------------------------------------+----+---+---+---------+-------
+----------------
Interface|Global Address                                        |Mode|St |TTL|Multicast|  VRF   | DR    |
Override
         |  + Designated Router                          Port |    |   |Thr|Boundary |        | Prio |
Interval
---------+-----------------------------------------------------+----+---+---+---------+-------
+----------------
   e1/1/1 a141::1                                             SM   Ena   1 None      default 1       3000ms
            + Itself
Total Number of Interfaces : 1
```

Syntax: show ipv6 pim [**vrf***vrf-name*] **interface** [**ethernet** *unit/slot/port* | **loopback** *num* | **ve** *num*]

The **vrf** option allows you to display multicast boundary information for the VRF instance identified by the *vrf-name* variable.

The **ethernet** *unit/slot/port* parameter specifies the physical port.

The **loopback** *num* parameter specifies the loopback port.

The **ve** *num* parameter specifies a virtual interface.

The following table displays the output from the **show ip pim interface ethernet** command.

TABLE 30 Output from the show ipv6 pim interface ethernet command

Field	Description
Interface	Name of the interface.
Global Address	IP address of the interface.
Port	Port number of the designated router.
Mode	PIM mode.
St	State.
TTL Thr	Time to live threshold.
Multicast Boundary	Multicast boundary, if one exists.
VRF	Name of the VRF.
DR Prio	Designated router priority.
Override Interval	Override interval in milliseconds.

Displaying a list of multicast groups

To display IPv6 PIM group information, enter the **show ipv6 pim group** command at any CLI level.

```
device# show ipv6 pim group
Total number of groups: 1
1    Group ff7e:a40:2001:3e8:27:0:1:2
     Group member at  e1/3/1: v31
```

Syntax: show ipv6 pim [**vrf** *vrf-name*] **group**

The **vrf** parameter allows you to display IPv6 PIM group information for the VRF instance identified by the *vrf-name* variable.

The following table displays the output from the **show ipv6 pim group** command.

TABLE 31 Output from the show ipv6 pim group command

Field	Description
Total number of Groups	Lists the total number of IPv6 multicast groups the device is forwarding.
Group	The multicast group address.
Group member at	Interface unit/slot/port.

Displaying BSR information

To display information on a device that has been elected as the BSR, enter the **show ipv6 pim bsr** command at the CLI level.

```
device# show ipv6 pim bsr
PIMv2 Bootstrap information for Vrf Instance : default-vrf
------------------------------------------------------------------
This system is the Elected BSR
BSR address: 2006:1001::1. Hash Mask Length 64. Priority 32.
Next bootstrap message in 00:01:00
Configuration:
 Candidate loopback 1 (Address 2006:1001::1). Hash Mask Length 64. Priority 32.
Next Candidate-RP-advertisment in 00:00:50
 RP: 2006:1001::1
  group prefixes:
  ff00:: / 8
 Candidate-RP-advertisement period: 60
 Candidate-RP-advertisement period: 60

 Candidate-RP-advertisement period: 60
```

The following example shows information displayed on a device that is not the BSR. Notice that some fields shown in the previous example do not appear in the following example.

```
device# show ipv6 pim bsr
PIMv2 Bootstrap information for Vrf Instance : default-vrf
------------------------------------------------------------
 BSR address: 2006:1001::1. Hash Mask Length 64. Priority 32.
This system is not a Candidate-RP.
This system is not a Candidate-RP.
```

Syntax: show ipv6 pim [**vrf** *vrf-name*] **bsr**

The **vrf** parameter allows you to display IPv6 PIM BSR information for the VRF instance identified by the *vrf-name* variable.

The following table displays the output from the **show ipv6 pim bsr** command.

TABLE 32 Output from the show ipv6 pim bsr command

Field	Description
BSR address	The IPv6 address of the interface configured as the IPv6 PIM Sparse Bootstrap Router (BSR).
BSR priority	The priority assigned to the interface for use during the BSR election process. During BSR election, the priorities of the candidate BSRs are compared and the interface with the highest BSR priority becomes the BSR.
Hash mask length	The number of significant bits in the IPv6 multicast group comparison mask. This mask determines the IPv6 multicast group numbers for which the device can be a BSR. The default is 32 bits, which allows the device to be a BSR for any valid IPv6 multicast group number. **NOTE** This field appears only if this device is a candidate BSR.
Next bootstrap message in	Indicates how many seconds will pass before the BSR sends its next Bootstrap message. **NOTE** This field appears only if this device is the BSR.
Next Candidate-RP-advertisement message in	Indicates how many seconds will pass before the BSR sends its next candidate RP advertisement message. **NOTE** This field appears only if this device is a candidate BSR.
RP	Indicates the IPv6 address of the Rendezvous Point (RP). **NOTE** This field appears only if this device is a candidate BSR.
group prefixes	Indicates the multicast groups for which the RP listed by the previous field is a candidate RP. **NOTE** This field appears only if this device is a candidate BSR.
Candidate-RP-advertisement period	Indicates how frequently the BSR sends candidate RP advertisement messages. **NOTE** This field appears only if this device is a candidate BSR.

Displaying candidate RP information

To display candidate RP information, enter the **show ipv6 rp-candidate** command at any CLI level.

```
device# show ipv6 pim rp-candidate
Next Candidate-RP-advertisement in 00:00:10
  RP: 1be::11:21
    group prefixes:
    ff00:: / 8
  Candidate-RP-advertisement period: 60
```

This example shows information displayed on a device that is a candidate RP. The following example shows the message displayed on a device that is not a candidate RP.

```
device# show ipv6 pim rp-candidate
```

```
This system is not a Candidate-RP.
```

Syntax: show ipv6 pim [**vrf** *vrf-name*] **rp-candidate**

The **vrf** parameter allows you to display IPv6 candidate RP information for the VRF instance identified by the *vrf-name* variable.

The following table displays the output from the **show ipv6 pim rp-candidate** command.

TABLE 33 Output from the show ipv6 pim rp-candidate command

Field	Description
Candidate-RP-advertisement in	Indicates how many seconds will pass before the BSR sends its next RP message. **NOTE** This field appears only if this device is a candidate RP.
RP	Indicates the IPv6 address of the Rendezvous Point (RP). **NOTE** This field appears only if this device is a candidate RP.
group prefixes	Indicates the multicast groups for which the RP listed by the previous field is a candidate RP. **NOTE** This field appears only if this device is a candidate RP.
Candidate-RP-advertisement period	Indicates how frequently the BSR sends candidate RP advertisement messages. **NOTE** This field appears only if this device is a candidate RP.

Displaying RP-to-group mappings

To display RP-to-group-mappings, enter the **show ipv6 pim rp-map** command at any CLI level.

```
device#show ipv6 pim rp-map
Number of group-to-RP mappings: 3
------------------------------------------------------------------------------
S.No  Group address   RP address
------------------------------------------------------------------------------
1     ff07::c:1       3200:12::32
2     ff07::c:2       3200:12::32
3     ff07::c:3       3200:12::32
Number of group-to-RP mappings: 3
device#
```

Syntax: show ipv6 pim [**vrf** *vrf-name*] **rp-map**

The **vrf** parameter allows you to display IPv6 RP-to-group-mappings for the VRF instance identified by the *vrf-name* variable.

The following table displays the output from the **show ipv6 rp-map** command.

TABLE 34 Output from the show ipv6 pim rp-map command

Field	Description
Index	The index number of the table entry in the display.
Group address	Indicates the IPv6 PIM Sparse multicast group address using the listed RP.

TABLE 34 Output from the show ipv6 pim rp-map command (continued)

Field	Description
RP address	Indicates the Iv6 address of the Rendezvous Point (RP) for the listed PIM Sparse group.

Displaying RP information for an IPv6 PIM Sparse group

To display RP information for an IPv6 PIM Sparse group, enter the following command at any CLI level.

```
device# show ipv6 pim rp-hash ff1e::1:2
  RP: 2001:3e8:255:255::17, v2
    Info source: 2001:3e8:255:255::17, via bootstrap
```

Syntax: show ipv6 pim [**vrf** *vrf-name*] **rp-hash** *group-addr*

The **vrf** parameter allows you to display RP information for a PIM Sparse group for the VRF instance identified by the *vrf-name* variable.

The *group-addr* parameter is the address of an IPv6 PIM Sparse IP multicast group.

The following table displays the output from the **show ipv6 pim rp-hash** *group-addr* command.

TABLE 35 Output from the show ipv6 pin rp-hash *group-addr* command

Field	Description
RP	Indicates the IPv6 address of the Rendezvous Point (RP) for the specified IPv6 PIM Sparse group. Following the IPv6 address is the port or virtual interface through which this device learned the identity of the RP.
Info source	Indicates the IPv6 address on which the RP information was received. Following the IPv6 address is the method through which this device learned the identity of the RP.

Displaying the RP set list

To display the RP set list, enter the **show ipv6 pim rp-set** command at any CLI level.

```
device# show ipv6 pim rp-set
Static RP
---------
Static RP count: 1
100::1
Number of group prefixes Learnt from BSR: 0
No RP-Set present
```

Syntax: show ipv6 pim [**vrf** *vrf-name*] **rp-set**

The **vrf** parameter allows you to display the RP set for the VRF instance identified by the *vrf-name* variable.

The following table displays the output from the **show ipv6 pim rp-set** command.

TABLE 36 Output from the show ipv6 pim rp-set command

Field	Description
Number of group prefixes	The number of IPv6 PIM Sparse group prefixes for which the RP is responsible.
Group prefix	Indicates the multicast groups for which the RP listed by the previous field is a candidate RP.

TABLE 36 Output from the show ipv6 pim rp-set command (continued)

Field	Description
RPs expected or received	Indicates how many RPs were expected and received in the latest Bootstrap message.
RP *num*	Indicates the RP number. If there are multiple RPs in the IPv6 PIM Sparse domain, a line of information for each of them is listed, and they are numbered in ascending numerical order.
priority	The RP priority of the candidate RP. During the election process, the candidate RP with the highest priority is elected as the RP.
age	The age (in seconds) of this RP-set. **NOTE** If this device is not a BSR, this field contains zero. Only the BSR ages the RP-set.

Displaying multicast neighbor information

To display information about IPv6 PIM neighbors, enter the **show ipv6 pim neighbor** command at any CLI level.

```
Device#show ipv6 pim neighbor
-------+--------+-------------------------+--------+---+
PPort  |PhyPort |Neighbor                 |Holdtime|T  |
       |        |                         |sec     |Bit|
-------+--------+-------------------------+--------+---+-
vv503   e2/1/11  fe80::204:ff:fe05:6         105      1
                + 2006:503::1001
vv503    2/1/11  fe80::768e:f8ff:fe2c:cb80   105      1
                 + 2006:503::1004
Total Number of Neighbors : 2


[output continued]

+---------+---------+-----+----------+--------+----+
|PropDelay|Override |Age  |UpTime    |VRF     |Prio
|msec     |msec     |sec  |          |        |
+---------+---------+-----+----------+--------+----+
 500       3000      25    06:50:10   default  1

 500       3000      12    06:50:10   default  1
```

Syntax: show ipv6 pim [**vrf** *vrf-name*] **neighbor**

The **vrf** *vrf-name* keyword allows you to display the IPv6 PIM neighbors for the VRF instance identified by the *vrf-name* variable.

The following table displays the output from the **show ipv6 pim neighbor** command.

TABLE 37 Output from the show ipv6 pim neighbor command

Field	Description
Port	The routing interface through which the device is connected to the neighbor.
Phyport	The physical interface through which the device is connected to the neighbor.
Neighbor	The IPv6 interface of the IPv6 PIM neighbor interface.

TABLE 37 Output from the show ipv6 pim neighbor command (continued)

Field	Description
Holdtime sec	Indicates how many seconds the neighbor wants this device to hold the entry for this neighbor in memory. The neighbor sends the Hold Time in its hello packets. • If the device receives a new hello packet before the Hold Time received in the previous packet expires, the device updates its table entry for the neighbor. • If the device does not receive a new hello packet from the neighbor before the Hold time expires, the device assumes the neighbor is no longer available and removes the entry for the neighbor.
T Bit	Specifies the ability of the sending router to disable joins suppression.
PropDelay msec	Expected propagation delay over the local link.
Override msec	Default delay interval over which to randomize, when scheduling a delayed join message.
Age sec	The number of seconds since the device received the last hello message from the neighbor.
UpTime	The number of seconds the PIM neighbor has been up. This timer starts when the device receives the first hello messages from the neighbor.
VRF	
Prio	The DR priority that is used in the DR election process. This can be a configured value or the default value of 1.

Displaying the IPv6 PIM multicast cache

To display the IPv6 PIM multicast cache, enter the **show ipv6 pim mcache** command at any CLI level.

```
device#show ipv6 pim mcache
IP Multicast Mcache Table
Entry Flags    : SM  - Sparse Mode, SSM - Source Specific Multicast, DM - Dense Mode
                 RPT    - RPT Bit, SPT - SPT Bit, LSRC - Local Source, LRCV - Local Receiver
                 HW - HW Forwarding Enabled, FAST - Resource Allocated, TAG - Need For Replication Entry
                 REGPROB - Register In Progress, REGSUPP - Register Suppression Timer
                 MSDPADV - Advertise MSDP, NEEDRTE - Route Required for Src/RP,  PRUN - DM Prune Upstream
Interface Flags: IM - Immediate, IH - Inherited, WA - Won Assert
                 MJ - Membership Join, MI - Membership Include, ME - Membership Exclude
                 BR - Blocked RPT, BA - Blocked Assert, BF - Blocked Filter, BI - Blocked IIF
Total entries in mcache: 4
1    (*, ff05::4422) RP 2006:1001::1, in v503 (tag e2/1/11), Uptime 1d 00:27:26 (SM)
     upstream neighbor fe80::204:ff:fe05:6 (2006:503::1001)
     Flags (0x002604a2) SM RPT LRCV TAG
     slow ports: ethe 3/1/1
     AgeSltMsk: 0, L2 FID: 8192, DIT: NotReq, profile: none
     Forwarding_oif: 1, Immediate_oif: 1, Blocked_oif: 0
     L3 (SW) 1:
       e3/1/1(VL170), 1d 00:27:26/0, Flags: MJ
2    (2006:170::1010, ff34::500) in v170 (tag e3/1/1), Uptime 00:37:51, Rate 0 (SM)
     Source is directly connected. RP 2006:1001::1
     Flags (0x20429ce1) SM SPT REG L2REG LSRC HW FAST TAG
     fast ports: ethe 2/1/11
     AgeSltMsk: 1, L2 FID: 4188, DIT: 1 , AvgRate: 0, profile: none
     Forwarding_oif: 1, Immediate_oif: 1, Blocked_oif: 0
     L3 (HW) 1:
       TR(e2/1/11,e2/1/11)(VL503), 00:37:26/183, Flags: IM
    Src-Vlan: 170
```

Syntax: show ipv6 pim mcache [**multicast cache entries source/group address** | **multicast cache ipv6-group-address**]

Syntax: show ipv6 pim [**vrf** *vrf-name*] **mcache** [**source-address** | **group-address** | **counts** | **dense** | **dit-idx** *dit-idx* | **g_entries** | **receiver** | **sg_entries** | **sparse** | **ssm**]

The **vrf** option allows you to display the IPv6 PIM multicast cache for the VRF instance identified by the *vrf-name* variable.

The *source-address* parameter selects the multicast cache source address.

The *group-address* parameter selects the multicast cache group address.

The **counts** keyword indicates the count of entries.

The **dense** keyword displays only the PIM Dense Mode entries.

The *dit-idx* variable allows you to display all entries that match a specified dit.

The **g_entries** keyword displays only the (*, G) entries.

The **receiver** keyword allows you to display all entries that egress a specified interface.

The **sg_entries** keyword displays only the (S, G) entries.

The **sparse** keyword displays only the PIM Sparse Mode entries.

The **ssm** keyword displays only the SSM entries.

The following table describes the output parameters of the **show ipv6 pim vrf mcache** command.

TABLE 38 Output parameters of the show ipv6 pim mcache command

Field	Description
Total entries in mcache	Shows the total number of PIM mcache entries.
upstream neighbor	Shows the upstream neighbor for the Source/RP based on the type of entry. For (*,G) it shows the upstream neighbor towards the RP. For (S,G) entries it shows the upstream neighbor towards the source.
Flags	Show the flags associated with the forward entry.
slow ports ethe	Shows the forwarding port ID of the mcache entry which is in the software forwarding path.
AgeSltMsk	Shows the slot number on which MP expects ingress traffic.
L2 FID	Shows the hardware resource allocated for the traffic switched to receivers in the ingress VLAN.
DIT	Shows the hardware resource allocated for routed receivers.
AvgRate	Shows the average data traffic rate for the mcache entry
profile	Shows the profile ID associated with the stream.
Forwarding_oif	Shows the number of outgoing interfaces of the mcache entry.
immediate_oifs	Shows the local immediate outgoing interface of the mcache entry.
blocked_oifs	Shows the PIM Sparse mode blocked outgoing interfaces.
L3 (SW) 1	Shows whether the traffic is switched or routed out of the interface.
L3 (HW) 1	The forwarding entries by using hardware.
Src-Vlan	VLAN associated with the ingress interface.

Displaying IPv6 PIM RPF

The **show ipv6 pim rpf** command displays what PIM sees as the reverse path to the source. While there may be multiple routes back to the source, the one displayed by the **show ipv6 pim rpf** command is the one that PIM thinks is best.

```
device# show ipv6 pim rpf 2008:165::1010
upstream nbr 2006:503::1001 on v503
```

Syntax: show ipv6 pim [**vrf** *vrf-name*] **rpf** *ip-address*

The **vrf** parameter allows you to display what PIM sees as the reverse path to the source for a VRF instance specified by the *vrf-name* variable.

The *ip-address* variable specifies the source address for RPF check.

Displaying IPv6 PIM counters

You can display the number of default-vlan-id changes that have occurred since the applicable VRF was created and how many times a tagged port was placed in a VLAN since the applicable VRF was created, as shown in the following example.

```
device#show ipv pim vrf eng counter
Event Callback:
 DFTVlanChange : 0    VlanPort : 0
LP to MP IPCs:
 SM_REGISTER : 8315   MCAST_CREATE :     0
 S_G_AGEOUT :     3   WRONG_IF :         0
 ABOVE_THRESHOLD: 0   MCAST_FIRST_DATA : 3
 SET KAT :        3   SET KAT INFINITY : 3
MP to LP IPCs:
 INIT : 25            INSERT_VPORT :  30
 DELETE_VPORT : 186   DELETE_VIF :   162
 MOVE_VPORT :     0   DEL_ENTRY :     16
 INSERT_SOURCE :  0   DELETE_SOURCE :  0
 RESET_SRC_LIST : 0   MOVE_TNNL_PORT : 0
 FLAG_CHANGE :    6   FDB_VIDX_CHANGE: 0
 OIF_FLAG_CHANGE :0
Error Counters:
 PIM_PKT_DRP :  0     PIM_PKT_DRP(Glb) : 0
 MCGRP_PKT_DRP: 0     MCGRP_PKT_DRP(Gl): 0
 RPSET_MAXED :  0
```

Syntax: show ipv6 pim [**vrf** *vrf-name*] **counter**

The **vrf** parameter allows you to display IPv6 PIM counters for the VRF instance identified by the *vrf-name* variable.

The following table displays the output from the **show ipv6 vrf eng counter** command.

TABLE 39 Output from the show ipv6 pim vrf eng counter command

Field	Description
DFTVlanChange	The number of default-vlan-id changes that have occurred since the applicable VRF was created.
VlanPort	The number of times that a tagged port was placed in a VLAN since the applicable VRF was created.

Displaying the IPv6 PIM resources

To display the hardware resource information, such as hardware allocation, availability, and limit for software data structure, enter the **show ipv6 pim resource** command.

```
device#show ipv6 pim vrf white res
Global PIM Parameters :-
GLOBAL Ipv6 MULTICAST CLASS Size:23573 bytes
```

```
GLOBAL Ipv6 PIM CLASS Size:2162 bytes
MULTICAST IPV6 CLASS Num alloc:2, System max:17, Size:1346 bytes
PIM IPV6 CLASS Num alloc:2, System max:17, Size:50485
Vrf Instance : white
---------------------------------------
                   alloc in-use avail get-fail limit  get-mem  size init
NBR list              64      2    62        0    512       73   96   64
RP set list          256      1   255        0   1536    12824   49  256
Static RP             64      0    64        0     64        0   42   64
LIF Entry            512      0   512        0    512        0   47  512
Anycast RP            64      0    64        0     64        0  190   64
timer                 64      0    64        0  14848       65   64   64
prune                 32      0    32        0   7424        0   34   32
pimsm J/P elem      1024      0  1024        0  48960   640448   29  128
Timer Data           512      2   510        0  14848     1409   28   64
mcache SLIB Sync    1120      2  1118        0  64960     9502   34  280
mcache               896      2   894        0  12992     5570 1144   56
graft if no mcache   197      0   197        0  45704        0   64  197
HW replic vlan      1000      2   998        0 116000   170179   66  500
HW replic port      1024      2  1022        0  59392   170179   81  256
pim/dvm intf. group   64      0    64        0  14848        0   24   64
pim/dvm global group 512      0   512        0  14848     6700   46   64
repl entry(Global)  1024      2  1022        0 237568    40644   49 1024
MLD Resources(All Vrfs):
groups              1024      0  1024        0   4096     7100  328  256
phy-ports           2048      0  2048        0   4096     7600  148  256
exist-phy-port      1792      0  1792        0  12992   196484   62   56
group-query           56      0    56        0  12992        0   84   56
Hardware-related Resources:
Total (S,G) entries 2
Total SW FWD entries 0
 Total sw w/Tag MVID entries 0
 Total sw w/Tag invalid MVID entries 0
Total HW FWD entries 2
 Total hw w/Tag MVID entries 2
 Total hw w/Tag invalid MVID entries 0
device#
```

Syntax: show ipv6 pim [**all-vrf** | [**vrf** *vrf-name*]] **resource**

The **vrf** parameter allows you to display hardware resource information for the VRF instance identified by the *vrf-name* variable.

The following table displays the output from the **show ipv6 pim resource** command.

TABLE 40 Output from the show ipv6 pim resource command

Field	Description
Num alloc	Number of allocated PIM resources.
System max	Maximum number of VRF resources.
Size	Internal size.
alloc	Number of nodes of that data that are currently allocated in memory.
in-use	Number of allocated nodes in use.
avail	Number of allocated nodes are not in use.
get-fail	Number of allocated notes that failed.
limit	Maximum number of nodes that can be allocated for a data structure. This may or may not be configurable, depending on the data structure
get-mem	Current memory allocation.
size	Unit size.
init	Initial number.

To display usage and fail-count information for SG entries on each VRF, use the **show ipv6 pim all-vrf hw-resource** command.

```
device# show ipv6 pim all-vrf hw-resource
              VRF  In-Use     Fail
       default-vrf   3072        8
              blue   3072        0
   -------------------------------
       Total usage   6144

   System-max limit for SG entries: 6144
```

Syntax: show ipv6 pim [**all-vrf** | [**vrf** *vrf-name*]] **hw-resource**

The **vrf** parameter allows you to display hardware resource information for the VRF instance identified by the *vrf-name* variable.

The following table displays the output from the **show ipv6 pim all-vrf hw-resource** command.

TABLE 41 Output from the show ipv6 pim all-vrf hw-resource command

Field	Description
VRF	Name of the VRF.
Usage	Number of allocated SG entries in this VRF.
Fail	Number of failures while allocating SG entries in this VRF (due to system-max limit).
Total usage	Total number of SG entries in the system (All-VRFs).
System-max limit for SG entries	Configured system limit using the pim6-hw-mcache command.

Displaying PIM traffic statistics

To display IPv6 PIM traffic statistics, enter the **show ipv6 pim traffic** command at any CLI level.

```
device# show ipv6 pim traffic
Port    HELLO     JOIN-PRUNE  ASSERT    REGISTER  REGISTER  BOOTSTRAP CAND. RP  Err
                                       GRAFT(DM) STOP(SM)  MSGS (SM) ADV. (SM)
-------+---------+-----------+---------+---------+---------+---------+---------+---
       Rx        Rx          Rx        Rx        Rx        Rx        Rx        Rx
------+---------+-----------+---------+---------+---------+---------+---------+---
v170    0         0           0         0         0         0         0         0
v501    0         0           0         0         0         0         0         0
v503    3302      2524        0         0         0         0         0         0
Port    HELLO     JOIN-PRUNE  ASSERT    REGISTER  REGISTER  BOOTSTRAP CAND. RP  Err
                                       GRAFT(DM) STOP(SM)  MSGS (SM) ADV. (SM)
-------+---------+-----------+---------+---------+---------+---------+---------+---
       Tx        Tx          Tx        Tx        Tx        Tx        Tx
------+---------+-----------+---------+---------+---------+---------+---------+---
v170    3576      0           0         0         0         0         0
v501    1456      0           0         0         0         0         0
v503    1456      1314        0         0         0         2         0
```

Syntax: show ipv6 pim [**vrf** *vrf-name*] **traffic**

The **vrf** parameter allows you to display IPv6 traffic statistics for the VRF instance identified by the *vrf-name* variable.

The following table displays the output from the **show ipv6 pim traffic** command.

TABLE 42 Output from the show ipv6 pim traffic command

Field	Description
Port	The port or virtual interface on which the IPv6 PIM interface is configured.
Hello	The number of IPv6 PIM Hello messages sent or received on the interface.

TABLE 42 Output from the show ipv6 pim traffic command (continued)

Field	Description
Join-Prune	The number of Join or Prune messages sent or received on the interface. **NOTE** Unlike PIM dense, PIM Sparse uses the same messages for Joins and Prunes.
Assert	The number of Assert messages sent or received on the interface.
Register Graft (DM)	The number of Register messages sent or received on the interface.
Regiser Stop (SM)	The number of Register Stop messages sent or received on the interface.
Bootstrap Msgs (SM)	The number of bootstrap messages sent or received on the interface.
Cand. RP Adv. (SM)	The total number of Candidate-RP-Advertiment messages sent or received on the interface.
Err	The total number of MLD messages discarded, including a separate counter for those that failed the checksum comparison.

Clearing the IPv6 PIM forwarding cache

You can clear the IPv6 PIM forwarding cache using the **clear ipv6 pim cache** command.

```
device# clear ipv6 pim cache
```

Syntax: clear ipv6 pim [**vrf** *vrf-name*] **cache**

Use the **vrf** parameter to clear the IPv6 PIM forwarding cache for a VRF instance specified by the *vrf-name* variable.

Clearing the IPv6 PIM message counters

You can clear the IPv6 PIM message counters using the **clear ipv6 pim counters** command.

```
device# clear ipv6 pim counters
```

Syntax: clear ipv6 pim [**vrf** *vrf-name*] **counters**

Use the **vrf** parameter to clear the IPv6 PIM message counters for a VRF instance specified by the *vrf-name* variable.

Updating PIM Sparse forwarding entries witha new RP configuration

If you make changes to your static RP configuration, the entries in the IPv6 PIM Sparse multicast forwarding table continue to use the old RP configuration until they are aged out.

The **clear IPv6 pim rp-map** command allows you to update the entries in the static multicast forwarding table immediately after making RP configuration changes. This command is meant to be used with **rp-address** command.

To update the entries in an IPv6 PIM Sparse static multicast forwarding table with a new RP configuration, enter the **clear ipv6 pim rp-map** command at the privileged EXEC level of the CLI.

```
device(config)# clear ipv6 pim rp-map
```

Syntax: clear ipv6 pim [**vrf** *vrf-name*] **rp-map**

Use the **vrf** parameter to clear the IPv6 PIM Sparse static multicast forwarding table for a VRF instance specified by the *vrf-name* variable.

Clearing the IPv6 PIM traffic

To clear counters on IPv6 PIM traffic, enter the **clear ipv6 pim traffic** command.

```
device# clear ipv6 pim traffic
```

Syntax: clear ipv6 pim [**vrf** *vrf-name*] **traffic**

Use the **vrf** par meter to clear counters on IPv6 PIM traffic for a VRF instance specified by the *vrf-name* variable.

Defining the maximum number of IPv6 PIM cache entries

You can use the **max-mcache** command to define the maximum number of repeated PIM traffic being sent from the same source address and being received by the same destination address. To define the maximum for the default VRF, enter the **max-mcache** command.

```
Device(config)# ipv6 router pim
Device(config-ipv6-pim-router)# max-mcache 999
```

Syntax: [no] max-mcache *num*

The *num* variable specifies the maximum number of IPv6 multicast cache entries for PIM in the default VRF. If not defined by this command, the maximum value is determined by the **system max** command parameter, **pim6-hw-mcache**, or by available system resources.

To define the maximum number of IPv6 PIM cache entries for a specified VRF, use the following command.

```
Device(config)# ipv6 router pim vrf blue
Device(config-ipv6-pim-router-vrf-blue)# max-mcache 999
```

Syntax: [no] ipv6 router pim [**vrf** *vrf-name*]

The **vrf** parameter specified with the **ipv6 router pim** command allows you to configure the **max-mcache** command for a virtual routing instance (VRF) specified by the variable *vrf-name*.

The **vrf** parameter specified with the **router pim** command allows you to configure the **max-mcache** command for a virtual routing instance (VRF) specified by the variable *vrf-name*.

The *num* variable specifies the maximum number of multicast cache entries for PIM in the specified VRF. If not defined by this command, the maximum value is determined by the system max command parameter, *pim6-hw-mcache*, or by available system resources.

There is a **system-max** command parameter change with the following new runtime command:

Syntax: system-max pim6-hw-mcache

The **system-max pim6-hw-mcache** command sets the maximum number of SG entries that are allowed in the hardware.

Configuring a static multicast route within a VRF

You can configure a static multicast route within a virtual routing instance (VRF).

1. Configure a VRF.

```
Device(config)# vrf vpn1
```

2. Configure the VRF address family for IPv6 and enter IPv6 address family configuration mode.

```
Device (config-vrf-vpn1)#address-family ipv6
```

3. Configure the destination IPv6 address.

```
Device (config-vrf-vpn1-ipv6)#ipv6 mroute 2001:0DB8:0:1::1/120 5100::192:1:1:1
```

Configuring the route precedence by specifying the route types

Precedence tables specify how routes are selected for multicast

PIM must be enabled at the global level.

Configure the **none** keyword to fill up the precedence table and ignore certain types of routes.

1. Enable PIM at the global level.

```
Device(config)# ipv6 router pim
```

2. Configure a precedence table.

```
Device(config-ipv6-pim-router)# route-precedence mc-non-default uc-non-default mc-default uc-default
```

   Configures a precedence table for multicast route selection that first looks for a non-default route from the mRTM, then a non-default route from the uRTM, then a default route from the mRTM, and then a default route from the uRTM.

3. Configure the **none** keyword to fill up the precedence table in order to ignore certain types of route.

```
Device(config-ipv6-pim-router)# route-precedence mc-non-default mc-default uc-non-default none
```

   Configures a precedence table for multicast route selection that ignores the default route from uRTM .

4. Return to global level.

```
Device(config-ipv6-pim-router)# exit
```

5. Enable PIM for a VRF.

```
Device(config)# ipv6 router pim vrf blue
```

6. Configure a precedence table for the VRF.

```
Device (config-ipv6-pim-router-vrf-blue)# route-precedence mc-non-default uc-non-default mc-default
uc-default
```

   Configures a precedence table that specifies a non-default route from the mRTM, then a non-default route from the uRTM, then a default route from the mRTM, and then a default route from the uRTM for the specified VRF,.

7. Configure the **none** keyword to fill up the precedence table.

```
Device(config-ipv6-pim-router-vrf-blue)# route-precedence mc-non-default mc-default uc-non-default
none
```

   Configures a precedence table that specifies the unicast default route for multicast for the specified VRF.

The following examples show how to configure the route precedence and display the route-precedence setting.

```
Device(config-ipv6-pim-router)#route-precedence mc-non-default mc-default uc-non-default uc-default
Device(config-ipv6-pim-router)#show ipv6 pim sparse

Global PIM Sparse Mode Settings
  Maximum Mcache           : 12992      Current Count                 : 2
  Hello interval           : 30         Neighbor timeout              : 105
  Join/Prune interval      : 60         Inactivity interval           : 180
  Hardware Drop Enabled    : Yes        Prune Wait Interval           : 3
  Bootstrap Msg interval   : 60         Candidate-RP Msg interval     : 60
  Register Suppress Time   : 60         Register Probe Time           : 10
  Register Stop Delay      : 10         Register Suppress interval    : 60
  SSM Enabled              : No         SPT Threshold                 : 1
  Route Precedence         : mc-non-default mc-default uc-non-default uc-default
  Embedded RP Enabled      : Yes

Device(config-ipv6-pim-router)#route-precedence admin-distance
Device(config-ipv6-pim-router)#show ipv6 pim sparse

Global PIM Sparse Mode Settings
  Maximum Mcache           : 12992      Current Count                 : 2
  Hello interval           : 30         Neighbor timeout              : 105
  Join/Prune interval      : 60         Inactivity interval           : 180
  Hardware Drop Enabled    : Yes        Prune Wait Interval           : 3
  Bootstrap Msg interval   : 60         Candidate-RP Msg interval     : 60
  Register Suppress Time   : 60         Register Probe Time           : 10
  Register Stop Delay      : 10         Register Suppress interval    : 60
  SSM Enabled              : No         SPT Threshold                 : 1
  Route Precedence         : admin-distance
  Embedded RP Enabled      : Yes
Device(config-ipv6-pim-router)
```

Configuring IPv6 PIM neighbor filtering

Configure an ACL and apply it to an interface to control neighbor access.

1. Configure an ACL named f10.

   ```
   Device(config)#ipv6 access-list f10
   ```

   Identify the ACL as an ASCII string.

   Configures an ACL and enters ACL configuration mode.

2. Configure ACL f10 to deny access to the device fe80::102.

   ```
   Device(config-ipv6-access-list f10)#deny ipv6 host fe80::102 any
   ```

   NOTE
   In this case, fe80::102 is is the link-local address of the interface.

3. Configure ACL f10 to permit access to all other devices.

   ```
   Device(config-ipv6-access-list f10)#permit ipv6 any any
   ```

4. Return to global configuration mode.

   ```
   Device(config-ipv6-access-list f10)#exit
   ```

5. Configure an Ethernet interface.

   ```
   Device(config)#interface ethernet 1/3/2
   ```

   Configures an interface and enters interface configuration mode.

6. Configure a filter that applies ACL f10 to the interface.

```
Device(config-if-e1000-1/3/2)#ipv6 pim neighbor-filter f10
```

Prevents the host that is specified in ACL f10, fe80::102, from becoming an IPv6 PIM neighbor on the interface.

IPv6 PIM convergence on MAC movement

PIM convergence occurs when the PIM module is notified of a topology change.

The notification is triggered upon a change in port status, Reverse Path Forwarding (RPF) failure in the hardware, or by the unicast routing module if there is a change in the Layer 3 topology. If the topology change occurs without a change in port status or RPF failure, or if the Layer 3 topology change is not notified by the unicast routing module, PIM convergence does not take place.

If there is a change in the source traffic at Layer 2 interface, the RPF check fails because only loose RPF check is supported (loose RPF check detects the change in the source traffic only at the Layer 3 interface level). A notification for a change in the source traffic at the Layer 2 interface can be triggered by MAC address movement. The MAC address movement notification triggers RPF check on MAC movement for directly connected sources. The MAC address movement notification can be triggered by configuring the **ipv6 multicast-routing rpf-check mac-movement** command. The MAC address movement notification triggers a notification to the PIM module which results in convergence. IPv6 PIM convergence is supported only in PIM Sparse mode and is not supported in PIM Dense mode.

PIM convergence on MAC movement is supported on the Ruckus ICX 7150, ICX 7250, ICX 7450, and ICX 7750.

NOTE
PIM convergence on MAC movement is applicable only when the multicast source and PIM routers are in the same Layer 2 domain.

PIM Anycast RP

PIM Anycast RP is a method of providing load balancing and fast convergence to PIM RPs in an IPv6 multicast domain. The RP address of the Anycast RP is a shared address used among multiple PIM routers, known as PIM RP. The PIM RP routers create an Anycast RP set. Each router in the Anycast RP set is configured using two IPv6 addresses: a shared RP address in their loopback address and a separate, unique IPv6 address. The loopback address must be reachable by all PIM routers in the multicast domain. The separate, unique IP address is configured to establish static peering with other PIM routers and communication with the peers.

When the source is activated in a PIM Anycast RP domain, the PIM First Hop (FH) will register the source to the closet PIM RP. The PIM RP follows the same MSDP Anycast RP operation by decapsulating the packet and creating the (s,g) state. If there are external peers in the Anycast RP set, the router will re-encapsulate the packet with the local peering address as the source address of the encapsulation. The router will unicast the packet to all Anycast RP peers. The re-encapsulation of the data register packet to Anycast RP peers ensures source state distribution to all RPs in a multicast domain.

Configuring PIM Anycast RP

A new PIM CLI is introduced for PIM Anycast RP under the router pim submode. The PIM CLI specifies mapping of the RP and the Anycast RP peers.

To configure PIM Anycast RP, enter the following commands.

```
device(config)# ipv6 router pim
device(config-ipv6-pim-router)# rp-address 1001::1
device(config-ipv6-pim-router)# anycast-rp 1001::1 my-anycast-rp-set-acl
```

To configure PIM Anycast RP for a specified VRF, enter the commands as shown in the following example.

```
device(config)# ipv6 router pim vrf blue
device(config-ipv6-pim-router-vrf-blue)# rp-address 1001::1
device(config-ipv6-pim-router-vrf-blue)# anycast-rp 1001::1 my-anycast-rp-set-acl
```

Syntax: [no] anycast-rp *rp-address my-anycast-rp-set-acl*

The *rp address* parameter specifies a shared RP address used among multiple PIM routers.

The *my-anycast-rp-set-acl* parameter specifies a host-based simple ACL used to specify the address of the Anycast RP set, including a local address.

The following example is a configuration of PIM Anycast RP 1001:1.The example avoids using the loopback 1 interface when configuring PIM Anycast RP because the loopback 1 address could be used as a router-id. A PIM First Hop router will register the source with the closest RP. The first RP that receives the register will re-encapsulate the register to all other Anycast RP peers. Refer to the figure “Example of a PIM Anycast RP network” as described in the configuration of PIM Anycast RP 1001:1.

```
device(config)# interface loopback 2
device(config-lbif-2)# ipv6 address 1001::1/96
device(config-lbif-2)# ipv6 pim-sparse
device(config-lbif-2)# interface loopback 3
device(config-lbif-3)# ipv6 address 1:1:1::1/96
device(config-lbif-3)# ipv6 pim-sparse
device(config-lbif-3)# ipv6 router pim
device(config-ipv6-pim-router)# rp-address 1001::1
device(config-ipv6-pim-router)# anycast-rp 1001::1 my-anycast-rp-set
device(config-ipv6-pim-router)# ipv6 access-list my-anycast-rp-set
device(config-std-nacl)# permit ipv6 host 1:1:1::1 any
device(config-std-nacl)# permit ipv6 host 2:2:2::2 any
device(config-std-nacl)# permit ipv6 host 3:3:3::3 any
```

The RP shared address 1001:1 is used in the PIM domain. IPv6 addresses 1:1:1::1, 2:2:2::2, and 3:3:3::3 are listed in the ACL that forms the self-inclusive Anycast RP set. Multiple Anycast RP instances can be configured on a system; each peer with the same or different Anycast RP set.

NOTE
The PIM Anycast CLI applies to only PIM routers running RP. All deny statements in the anycast_rp_set ACL are ignored.

The example shown in the figure “Example of a PIM Anycast RP network”is a PIM Anycast-enabled network with three RPs and one PIM-FH router connecting to its active source and local receiver. Loopback 2 in RP1, RP2, and RP3 each have the same IP addresses 1001:1. Loopback 3 in RP1, RP2, and RP3 each have separate IP address configured to communicate with their peers in the Anycast RP set.

FIGURE 12 Example of a PIM Anycast RP network

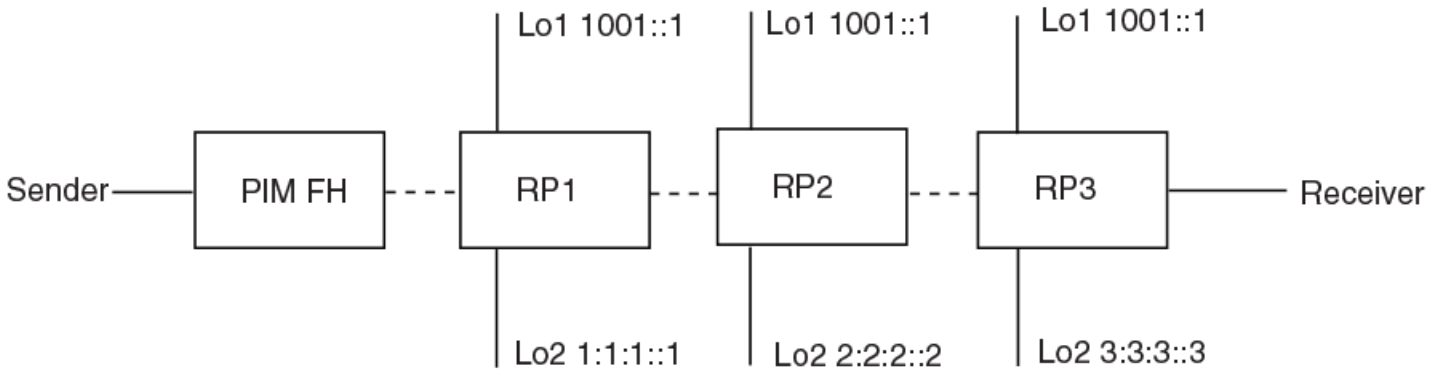

Displaying information for an IPv6 PIM Anycast RP interface

To display information for an IPv6 PIM Anycast RP interface, enter the **show ipv6 pim anycast-rp** command.

```
device(config)# show ipv6 pim anycast-rp
Number of Anycast RP: 1
Anycast RP: 1001::1
  ACL ID: 200
  ACL Name: my-anycast-rp-set
  ACL Filter: SET
  Peer List:
   1:1:1::1
   2:2:2::2
   3:3:3::3
```

Syntax: show ipv6 pim [**vrf** *vrf-name*] **anycast-rp**

The **vrf** parameter allows you to display information for an IPv6 Anycast RP interface for the VRF instance identified by the *vrf-name* variable.

The following table describes the parameters of the **show ipv6 pim anycast-rp** command.

TABLE 43 Output from the show ipv6 pim anycast-rp command

Field	Description
Number of Anycast RP	Specifies the number of Anycast RP sets in the multicast domain.
Anycast RP	Specifies a shared RP address used among multiple PIM routers.
ACL ID	Specifies the ACL ID assigned.
ACL Name	Specifies the name of the Anycast RP set.
ACL Filter	Specifies the ACL filter state SET or UNSET.
Peer List	Specifies host addresses that are permitted in the Anycast RP set.

Multicast Listener Discovery and source-specific multicast protocols

Multicast Listener Discovery Version 2 (MLDv2) protocol is supported. IPv6 routers use the MLDv2 protocol to discover multicast listeners, or nodes that wish to receive multicast packets on directly attached links. MLDv2 supports source filtering, the ability of a node to send reports on traffic that is from a specific address source or from all multicast addresses except the specified address sources. The information is then provided to the source-specific multicast (SSM) routing protocols such as PIM-SSM.

The IPv6 router stores a list of multicast addresses for each attached link. For each multicast address, the IPv6 router stores a filter mode and a source list. The filter mode is set to INCLUDE if all nodes in the source list for a multicast address are in the INCLUDE state. If the filter mode is INCLUDE, then only traffic from the addresses in the source list is allowed. The filter mode is set to EXCLUDE if at least one of the nodes in the source list is in an EXCLUDE state. If the filter mode is EXCLUDE, traffic from nodes in the source list is denied and traffic from other sources is allowed.

The source list and filter mode are created when the IPv6 querier router sends a query. The querier router is the one with the lowest source IPv6 address. It sends out any of the following queries:

- General query - The querier sends this query to learn all multicast addresses that need to be listened to on an interface.
- Address specific query - The querier sends this query to determine if a specific multicast address has any listeners.
- Address specific and source specific query - The querier sends this query to determine if specified sources of a specific multicast address have any listeners.

In response to these queries, multicast listeners send the following reports:

- Current state - This report specifies the source list for a multicast address and whether the filter mode for that source list is INCLUDE or EXCLUDE.
- Filter-mode change - This report specifies if there has been a change to the filter mode for the source list and provides a new source list.
- Source list change - This report specifies the changes to the source list.

MLDv1 is compatible with IGMPv2 and MLDv2 is compatible with IGMPv3.

Enabling MLDv2

The default MLD version when PIM Sparse Mode (PIM-SM) is enabled on an interface is MLDv1. You must configure the **ipv6 mld version 2** command to enable MLDv2.

To enable MLDv2, enter the following command at the interface level.

```
device(config)# ipv6 router pim
device(config-if-e10000-1/1/1)# ipv6 mld version 2
```

Syntax: [no] ipv6 mld version 2

Configuring MLD parameters for default and non-default VRFs

MLD allows you to configure the following parameters on default and non-default VRFs:

- Group membership time - Setting the group membership time on page 188
- Max group address - Setting the Maximum Number of MLD Group Addresses on page 188
- Max response time - Setting the maximum response time on page 189
- Query interval - Setting the query interval on page 189

- Last listener query count - Setting the last listener query interval on page 189
- Last listener query interval - Setting the last listener query interval on page 189
- Robustness - Setting the robustness on page 190
- Version - Setting the version on page 190

Setting the group membership time

You can set the group membership time for the default VRF or for a specified VRF. Group membership time defines how long a group will remain active on an interface in the absence of a group report. Possible values are from 5 through 26,000 seconds and the default value is 260 seconds.

To define an MLD group membership time of 2000 seconds, enter the following command.

```
device(config)# ipv6 mld group-membership-time 2000
```

Syntax: [no] ipv6 mld group-membership-time *5-26000*

To define an MLD group membership time of 2000 seconds for a specified VRF, enter the following commands.

```
device(config)# ipv6 router pim vrf blue
device(config-ipv6-pim-router-vrf-blue)# ipv6 mld group-membership-time 2000
```

Syntax: [no] ipv6 router pim [**vrf** *vrf-name*]

The **vrf** parameter specifies the virtual routing instance (VRF) specified by the variable *vrf-name* .

Setting the Maximum Number of MLD Group Addresses

You can change the maximum number of MLD group addresses for the default virtual routing and forwarding (VRF) instance or a specific VRF.

To set the maximum number of MLD group addresses for the default VRF, enter the **ipv6 mld max-group-address** command in global configuration mode with a value between 1 through 8192. The default is 4096.

1. Enter global configuration mode.

   ```
   device# configure terminal
   ```

2. Specify the IPv6 router configuration (in this case, PIM) and the name of the VRF (blue in this example).

   ```
   device(config)# ipv6 router pim vrf blue
   ```

3. To set the maximum number of MLD group addresses, enter the **ipv6 mld max-group-address** command followed by the value.

   ```
   device(config-ipv6-pim-router-vrf-blue)# ipv6 mld max-group-address 1000
   ```

The following example sets the maximum number of MLD group addresses for the VRF blue to 1000.

```
device# configure terminal
device(config)# ipv6 router pim vrf blue
device(config-ipv6-pim-router-vrf-blue)# ipv6 mld max-group-address 1000
```

Setting the maximum response time

You can define the maximum amount of time a multicast listener has to respond to queries by entering a command such as the following.

```
device(config)# ipv6 mld max-response-time 5
```

Syntax: [no] ipv6 mld max-response-time *seconds*

The *seconds* variable specifies the MLD maximum response time in seconds. You can specify from 1 through 25 seconds. The default is 10 seconds.

To define the maximum amount of time a multicast listener has to respond to queries for a specified VRF, enter the following commands.

```
device(config)# ipv6 router pim vrf blue
device(config-ipv6-pim-router-vrf-blue)# ipv6 mld max-response-time 5
```

Syntax: [no] ipv6 router pim [**vrf***vrf-name*]

The **vrf** parameter specifies the virtual routing instance (VRF) specified by the variable *vrf-name* .

Setting the query interval

You can define the frequency at which MLD query messages are sent. For example, if you want queries to be sent every 50 seconds, enter a command such as the following.

```
device(config)# ipv6 mld query-interval 50
```

Syntax: [no] ipv6 mld query-interval *seconds*

The *seconds* variable specifies the MLD query interval in seconds. You can specify from 2 through 3600 seconds. The default value is 125 seconds.

To define the frequency at which MLD query messages are sent for a specified VRF, enter the following commands.

```
device(config)# ipv6 router pim vrf blue
device(config-ipv6-pim-router-vrf-blue)# ipv6 mld query-interval 50
```

Syntax: [no] ipv6 router pim [**vrf** *vrf-name*]

The **vrf** parameter specifies the virtual routing instance (VRF) specified by the variable *vrf-name* .

Setting the last listener query interval

The Last Listener Query Interval is the Maximum Response Delay inserted into Multicast-Address-Specific Queries sent in response to Done messages, and is also the amount of time between Multicast- Address-Specific Query messages. When the device receives an MLDv1 leave message or an MLDv2 state change report, it sends out a query and expects a response within the time specified by this value. Using a lower value allows members to leave groups more quickly. You can set the last listener query interval by entering a command such as the following.

```
device(config)# ipv6 mld llqi 5
```

Syntax: [no] ipv6 mld llqi *seconds*

The *seconds* variable sets the last listener query interval in seconds. You can specify from 1 through 25 seconds. The default is 1.

To set the last listener query interval for a specified VRF, enter the following commands.

```
device(config)# ipv6 router pim vrf blue
device(config-ipv6-pim-router-vrf-blue)# ipv6 mld llqi 5
```

Syntax: [no] ipv6 router pim [**vrf** *vrf-name*]

The **vrf** parameter specifies the virtual routing instance (VRF) specified by the variable *vrf-name* .

Setting the robustness

You can specify the number of times that the switch sends each MLD message from this interface. Use a higher value to ensure high reliability from MLD. You can set the robustness by entering a command such as the following.

```
device(config)# ipv6 mld robustness 3
```

Syntax: ipv6 mld robustness *seconds*

The *seconds* variable sets the MLD robustness in seconds. You can specify from 2 through 7 seconds. The default is 2 seconds.

To set the robustness for a specified VRF, enter the following commands.

```
device(config)# ipv6 router pim vrf blue
device(config-ipv6-pim-router-vrf-blue)# ipv6 mld robustness 3
```

Syntax: [no] ipv6 router pim [**vrf** *vrf-name*]

The **vrf** parameter specifies the virtual routing instance (VRF) specified by the variable *vrf-name* .

Setting the version

You can use this command to set the MLD version (1 or 2) globally. You can select the version of MLD by entering a command such as the following.

```
device(config)# ipv6 mld version 1
```

Syntax: ipv6 mld version *version-number*

The *version-number* variable sets the MLD version. You can specify 1 or 2 for the MLD version.The default version is 2.

To set the global MLD version for a specified VRF, enter the following commands.

```
device(config)# ipv6 router pim vrf blue
device(config-ipv6-pim-router-vrf-blue)# ipv6 mld version 1
```

Syntax: [no] ipv6 router pim [**vrf** *vrf-name*]

The **vrf** parameter specifies the virtual routing instance (VRF) specified by the variable *vrf-name* .

Configuring MLD parameters at the interface level

The following MLD parameters can be configured at the interface level:

- Port- version - Specifying a port version on page 190
- Static-group - Specifying a static group on page 191
- Tracking - Enabling MLD tracking on an interface on page 191
- Version - Setting the version on an interface on page 191

Specifying a port version

To set the MLD version on a virtual Ethernet interface, enter the following commands as shown in the example.

```
device(config)# interface ve 10
device(config-vif-10)# ipv6 mld port-version 2
```

Syntax: ipv6 mld port-version *version-number*

Enter 1 or 2 for *version-number* . Be sure to enter 2 if you want to use source filtering.

Specifying a static group

A multicast group is usually learned when an MLDv1 report is received. You can configure one or more static groups without having to receive an MLDv1 report.

To configure two static groups, starting from ff0d::1, without having to receive an MLDv1 report on a virtual Ethernet interface, enter either this command:

```
Device(config-if-e1000-1/1/5)# ipv6 mld static-group ff0d::1 count 2
```

Or this command:

```
Device(config-if-e1000-1/1/5)# ipv6 mld static-group ff0d::1 to ff0d::2
```

To configure two static groups on virtual ports starting from ff0d::1, enter either this command:

```
Device(config)# interface ve 10
Device(config-vif-10)# ipv6 mld static-group ff0d::1 count 2 ethernet 1/1/5
```

Or this command:

```
Device(config)# interface ve 10
Device(config-vif-10)# ipv6 mld static-group ff0d::1 to ff0d::2 ethernet 1/1/5
```

Syntax: ipv6 mld static-group *multicast-group-address* [**count** *count-number* | **to** *multicast-group-address*] [**ethernet** *unit/slot/port* [**ethernet** *unit/slot/port* | **to** *unit/slot/port*] *****]

Enter the IPv6 multicast group address for the *multicast-group-address*.

The *count-number* range is 2-256.

Enter the number of the port that will be included in this static group for the **ethernet** *unit/slot/port* parameter. The asterisk (*) in the syntax means that you can enter as many port numbers as you want to include in the static group. For a virtual routing interface (ve), specify the physical Ethernet ports on which to add the group address.

Enabling MLD tracking on an interface

When MLD tracking is enabled, a Layer 3 switch tracks all clients that send membership reports. When a Leave message is received from the last client, the device immediately stops forwarding to the physical port (without waiting 3 seconds to confirm that no other clients still want the traffic). To enable MLD tracking on a virtual interface, enter the following commands.

```
device(config)# interface ve 10
device(config-vif-10)# ipv6 mld tracking
```

Syntax: ipv6 mld tracking

Setting the version on an interface

You can use this command to set the MLD version (1 or 2) on an interface. You can select the version of MLD by entering a command such as the following.

```
device(config)# interface ve 10
device(config-vif-10)# ipv6 mld version 2
```

Syntax: ipv6 mld version *version-number*

The *version-number* variable sets the MLD version on an interface. You can specify 1 or 2 for the MLD version.The default version is 2.

Displaying MLD group information

To display the list of multicast groups, enter a command such as the following.

```
device #show ipv6 mld group
Total 2 groups
------------------------------------------------------------------------------------
Idx  Group Address                          Port   Intf   GrpCmpV Mode    Timer Srcs
----+---------------------------------------+------+------+-------+-------+-----+----
   1 ff05::4422                            e3/1/1  v170      Ver1 exclude   221    0
   2 ff3f::300                             e3/1/1  v170      Ver2 include     0    1
Total number of groups 2
```

Syntax: show ipv6 mld [**vrf** *vrf-name*] **group**

The **vrf** parameter allows you to display the list of IPv6 MLD groups for the VRF instance identified by the *vrf-name* variable.

The following table displays the output from the **show ipv6 mld group** command.

TABLE 44 Output from the show ipv6 mld group command

Field	Description
IDX	Index for the MLD group.
Group Address	IPv6 address of the multicast group.
Port	The physical port to which the group belongs.
Intf	The routing interface to which the port belongs.
GrpCmpV	The version of the MLD group report message.
Mode	Indicates if the filter mode of the multicast group is in INCLUDE or EXCLUDE.
Timer	The number of seconds the interface can remain in its current mode.
Total number of groups	The total number of MLD groups.

Displaying MLD definitions for an interface

To display the MLD parameters on an interface, including the various timers, the current querying router, and whether or not MLD is enabled, enter the following command.

```
device#show ipv6 mld interface
---------+------+---------+-----------------------------------------+--
Intf/Port|Groups| Version |   Querier      | Timer |V1Rtr| Tracking
      |   |Oper Cfg|             |OQrr GenQ| |
---------+------+----+----+-----------------------------------------+--
e1/1/1         0        2      - Self     0      0     No  Disabled
v40            0        2      -                           Disabled
e3/1/1         1        2      - Self     0      0     No
e2/1/1         1        2      - Self     0      0     No
e1/1/1         1        2      - Self     0      0     No
v50            0        2      -                           Disabled
e1/1/2         0        2      - Self     0      0     No
v220           0        2      -                           Disabled
e1/1/1         3        2      - Self     0     12     No
```

Syntax: show ipv6 mld [**vrf** *vrf-name*] **interface** [**ethernet** *unit/slot/port* | **ve** *num* [**group** *A.B.C.D*]]

The **vrf** parameter allows you to display MLD parameters on an interface for the VRF instance identified by the *vrf-name* variable.

Enter **ve** and its number, or **ethernet** and its port address to display MLD information for a specific virtual routing interface or an Ethernet interface.

The following table displays the output from the **show ipv6 mld interface** command.

TABLE 45 Output from the show ipv6 mld interface command

Field	Description
version	Version of the MLD being used.
query int	Query interval in seconds.
max resp time	Number of seconds multicast groups have to respond to queries.
group mem time	Number of seconds multicast groups can be members of this group before aging out.
(details)	The following is displayed for each interface: • The port ID • The default MLD version being used • The multicast protocol used • IPV6 address of the multicast interface • If the interface has groups, the group source list, IPv6 multicast address, and the filter mode are displayed.

To display the MLD parameters on an interface for a specified VRF, enter the following command as shown in the example below.

```
device(config)# show ipv6 mld vrf public interface
---------+------+---------+---------------------------------------+---------+-----+---------
Intf/Port|Groups| Version |Querier                                |  Timer  |V1Rtr|Tracking
         |      |     Oper  Cfg|                                    |         OQrr GenQ|     |
---------+------+----+----+---------------------------------------+----+----+-----+---------
v6           0       2      -                                                    Disabled
e1/5/1       2       -      fe80::20c:dbff:fee2:5000               11    0 No
v61          0       2      -                                                    Disabled
e1/1/1       2       -      Self                                    0  122 No
```

Displaying MLD settings

To display MLD settings for the "eng" VRF, enter the following command.

```
device# show ipv6 mld vrf eng settings
MLD Global Configuration
  Query Interval            : 125s   Configured Interval    : 125s
  Max Response Time         : 10s
  Group Membership Time     : 260s
  Operating Version         : 2      Configured Version     : 0
  Robustness Variable       : 2
  Last Member Query Interval: 1s      Last Member Query Count: 2
  Older Host Present Timer  : 260s
```

Syntax: show ipv6 mld [**vrf** *vrf-name*] **settings**

The **vrf** parameter specifies that you want to display information for MLD settings for the VRF specified by the *vrf-name* variable.

The following table displays the output from the **show ipv6 mld vrf eng settings** command.

TABLE 46 Output from the show ipv6 mld vrf eng settings command

Field	Description
Query Interval	How often the router will query an interface for group membership.
Configured Interval	The interval that has been configured for the router.

TABLE 46 Output from the show ipv6 mld vrf eng settings command (continued)

Field	Description
Max Response Time	The length of time in seconds that the router will wait for an IGMP (V1 or V2) response from an interface before concluding that the group member on that interface is down and removing it from the group.
Group Membership Time	The length of time in seconds that a group will remain active on an interface in the absence of a group report.
Operating Version	The IGMP version operating on the router.
Configured Version	The IGMP version configured on the router.
Robustness Variable	Used to fine-tune for unexpected loss on the subnet. The value is used to calculate the group interval.
Last Member Query Interval	Indicates when a leave is received; a group-specific query is sent. The last member query count is the number of queries with a time interval of (LMQT) is sent.
Last Member Query Count	Specifies the number of group-specific queries when a leave is received.

Displaying static MLD groups

The following command displays static MLD groups for the "cs" VRF.

```
device# show ipv6 mld vrf cs static
Group Address                              Interface Port List
-----------------------------------------+---------+---------
ff1e:1::1                                  v3        ethe 1/2/10
ff1e:a::7f                                 v3        ethe 1/2/10
```

Syntax: show ipv6 mld [**vrf** *vrf-name*] **static**

The **vrf** parameter specifies that you want to display static MLD group information for the VRF specified by the *vrf-name* variable.

The following table displays the output from the **show ipv6 mld vrf cs static** command.

TABLE 47 Output from the show ipv6 mld vrf cs static command

Field	Description
Group Address	The address of the multicast group.
Interface Port List	The physical ports on which the multicast groups are received.

Displaying MLD traffic

To display information on MLD traffic, enter a command such as the following.

```
device# show ipv6 mld traffic
Recv  QryV1 QryV2 G-Qry GSQry MbrV1 MbrV2 Leave IS_IN IS_EX ToIN ToEX ALLO  BLK
e1/3/1    0     0     0     0     0     0     0     0     0    0    0    0    0
e1/3/2    0     0     0     0     0     0     0     0     0    0    0    0    0
e1/6/18   0     0     0     0     0   176     0   110     0    0    0   66    0
e1/6/19   0     0     0     0     0   176     0   110     0    0    0   66    0
e1/6/20   0     0     0     0     0   176     0   110     0    0    0   66    0
e1/6/25   0     0     0     0     0   176     0   110     0    0    0   66    0
l1        0     0     0     0     0     0     0     0     0    0    0    0    0
Send  QryV1 QryV2 G-Qry GSQry
e1/3/1    0     0     0     0
e1/3/2    0     0     0     0
e1/6/18   0    10    10     0
e1/6/19   0    10    10     0
e1/6/20   0    10    10     0
```

```
e1/6/25    0     10     10      0
l1         0      0      0      0
R2#
```

The report has a Receive and a Send section.

Syntax: show ipv6 mld [**vrf** *vrf-name*] **traffic**

The **vrf** parameter specifies that you want to display information on MLD traffic for the VRF specified by the *vrf-name* variable.

The following table displays the output from the **show ipv6 mld traffic** command.

TABLE 48 Output from the show ipv6 mld traffic command

Field	Description
QryV1	Number of general MLDv1 queries received or sent by the virtual routing interface.
QryV2	Number of general MLDv2 queries received or sent by the virtual routing interface.
G-Qry	Number of group-specific queries received or sent by the virtual routing interface.
GSQry	Number of source specific queries received or sent by the virtual routing interface.
MbrV1	Number of MLDv1 membership reports received.
MbrV2	Number of MLDv2 membership reports received.
Leave	Number of MLDv1 "leave" messages on the interface. (See 2_Ex for MLDv2.)
Is_IN	Number of source addresses that were included in the traffic.
Is_EX	Number of source addresses that were excluded in the traffic.
ToIN	Number of times the interface mode changed from exclude to include.
ToEX	Number of times the interface mode changed from include to exclude.
ALLOW	Number of times that additional source addresses were allowed or denied on the interface.
BLK	Number of times that sources were removed from an interface.

Clearing IPv6 MLD traffic

To clear counters on IPv6 MLD traffic, enter the following command.

```
device# clear ipv6 mld traffic
```

Syntax: clear ipv6 mld [**vrf** *vrf-name*] **traffic**

Use the **vrf** option to clear counters on IPv6 MLD traffic for a VRF instance specified by the *vrf-name* variable.

Clearing the IPv6 MLD group membership table cache

You can clear the IPv6 PIM group membership table cache using the following command.

```
device# clear ipv6 pim cache
```

Syntax: clear ipv6 pim [**vrf** *vrf-name*] **cache**

Use the **vrf** option to clear the IPv6 PIM group membership table cache for a VRF instance specified by the *vrf-name* variable.

IPv6 Multicast Boundaries

The Multicast Boundary feature is designed to selectively allow or disallow multicast flows to configured interfaces.

The **ipv6 multicast-boundary** command allows you to configure a boundary on PIM enabled interface by defining which multicast groups may not forward packets over a specified interface. This includes incoming and outgoing packets. By default, all interfaces that are enabled for multicast are eligible to participate in a multicast flow provided they meet the multicast routing protocol's criteria for participating in a flow.

Configuration considerations

- Only one ACL can be bound to any interface.
- Normal ACL restrictions apply as to how many software ACLs can be created, but there is no hardware restrictions on ACLs with this feature.
- Creation of a static MLD client is allowed for a group on a port that may be prevented from participation in the group on account of an ACL bound to the port's interface. In such a situation, the ACL would prevail and the port will not be added to the relevant entries.
- Either standard or extended ACLs can be used with the multicast boundary feature. When a standard ACL is used, the address specified is treated as a group address and NOT a source address.
- When a boundary is applied to an ingress interface, all packets destined to a multicast group that is filtered out will be dropped by software. Currently, there is no support to drop such packets in hardware.
- The **ipv6 multicast-boundary** command may not stop clients from receiving multicast traffic if the filter is applied on the egress interface up-stream from RP.

Configuring multicast boundaries

To define boundaries for PIM enabled interfaces, enter commands such as the following.

```
device(config)# interface ethernet 1/1/2
device(config-if-e1000-1/1/2)#ipv6 multicast-boundary MyRuckusAccessList
```

Syntax: [no] ipv6 multicast-boundary *acl-spec*

Use the *acl-spec* parameter to define the number or name identifying an access list that controls the range of group addresses affected by the boundary.

Use the **no ipv6 multicast boundary** command to remove the boundary on a PIM enabled interface.

The ACL, MyRuckusAccessList can be configured using standard ACL syntax. Some examples of how ACLs can be used to filter multicast traffic are as follows:

ACL to permit multicast traffic

To permit multicast traffic for group ff1e::300 and deny all other traffic, enter the following commands.

```
device(config)# ipv6 access-list abc
device(config-ipv6-access-list abc)# permit ipv6 any host ff1e::300
device(config-ipv6-access-list abc)# deny ipv6 any any
```

To permit multicast data traffic from source 5555::14 for group ff55::5514 and deny all other traffic, enter the following commands.

```
device(config)# ipv6 access-list ex2
device(config-ipv6-access-list ex2)# permit ipv6 host 5555::14 host ff55::5514
device(config-ipv6-access-list ex2)# deny  ipv6 any any
```

ACL to deny multicast traffic

To deny multicast data traffic for group ff55::55 and permit all other traffic, enter the following commands.

```
device(config)# ipv6 access-list ex1
device(config-ipv6-access-list ex1)# deny ipv6 any host ff55::55
device(config-ipv6-access-list ex1)# permit ipv6 any any
```

Displaying multicast boundaries

To display multicast boundary information, use the **show ipv6 pim interface** command. In this example, abc is the name of the access list.

```
Device# show ipv6 pim interface ethernet 1/1/7
Flags     : SM  - Sparse Mode v2
---------+-----------------------------------------------------+----+---+---+---------+
Interface|Global Address                                        |Mode|St |TTL|Multicast|
         |  + Designated Router                          Port |    |   |Thr|Boundary |
---------+-----------------------------------------------------+----+---+---+---------+
e1/1/1    a141::1                                             SM   Ena  1   abc

[output continued]
-------+----------------
  VRF  | DR    | Override
       | Prio  | Interval
-------+----------------
default 1       3000ms
           + Itself
Total Number of Interfaces : 1
```

IP Multicast Switch Port Extender Stacking

- Switch Port Extender and IP Multicast.....199
- IP multicast hardware entry optimization.....205

Switch Port Extender and IP Multicast

In a Switch Port Extender (SPX) stacking configuration, forwarding decisions always occur in the Control Bridge (CB) units, even for traffic that ingresses on a Port Extender (PE) port.

NOTE
Switch Port Extender is not supported on the Ruckus ICX 7150.

In the upstream direction (from a PE to a CB), the packets are tagged with an E-Tag to identify the ingress PE port. In the downstream direction (from a CB to a PE), the packets are tagged with an E-Tag to identify the egress PE ports. E-channel identifiers (E-CIDs) contained in the E-Tag header are used to identify a single or a set of PE ports.

NOTE
For details on SPX configuration and terminology, refer to the *FastIron Ethernet Switch Port Extender Configuration Guide*.

Multicast E-CID and IEE 802.1BR

The point-to-multipoint E-channels used for remote replication are identified by an E-CID with a value in the range of 0x1000 to 0x3FFF (values less than this are reserved for E-CIDs associated with point-to-point E-channels).

Multicast E-CID Manager

IEEE 802.1BR facilitates the use of multicast E-CIDs (point-to-multipoint) for replication of multicast packets by PE units.

The Multicast E-CID Manager maintains the ME-CIDs and hides the management, programming, and other issues from the applications. The Multicast E-CID Manager allocates and manages ME-CIDs on CB and PE units. The sharing of ME-CIDs is enabled by default. The following are the responsibilities of the Multicast E-CID Manager:

- Allocate, update, and delete ME-CIDs.
- ME-CID-based forwarding entry management on PE units.

Considerations for multicast forwarding on PE units

- The PE unit performs local replication of multi-destination traffic. The PE unit can perform replication within a VLAN, but not across VLANs.
- In an SPX domain, the following actions are not supported in a VLAN or VE on which multicast snooping or multicast routing is enabled:
  - Connecting a PIM router to a PE port
  - Connecting a multicast (IGMP or MLD) querier switch to a PE port.

- Multi-destination traffic forwarding and replication on PE units is performed using forwarding entries in the Layer 2 table.
- A lookup is performed using a multicast E-CID in the E-tag header.
- Forwarding cache entries are set up, updated, or torn down based on the E-channel register Control and Status Protocol (CSP) messages from the CB unit.
- SPX multicast deployment can be used to route the multicast traffic back to the ingress PE port.

Layer 2 multicast in an SPX configuration

Layer 2 multicast traffic forwarding behaves differently in an SPX stack configuration.

In releases prior to FastIron 8.0.40, Layer 2 forwarding lookup occurred on the ingress packet process of the unit. With the introduction of SPX stacking, Layer 2 forwarding lookup for the traffic that ingresses on a PE port always occurs on the CB. For multi-destination traffic, the CB sends a single copy of the packet to the PE unit, while the PE unit takes care of local replication. The E-CID of the source PE port is carried in the E-Tag header (as the ingress E-CID) so that the source PE unit can perform source port pruning.

The following figure illustrates how multicast traffic forwarding occurs on Layer 2 devices.

FIGURE 13 Multicast traffic forwarding on Layer 2 devices

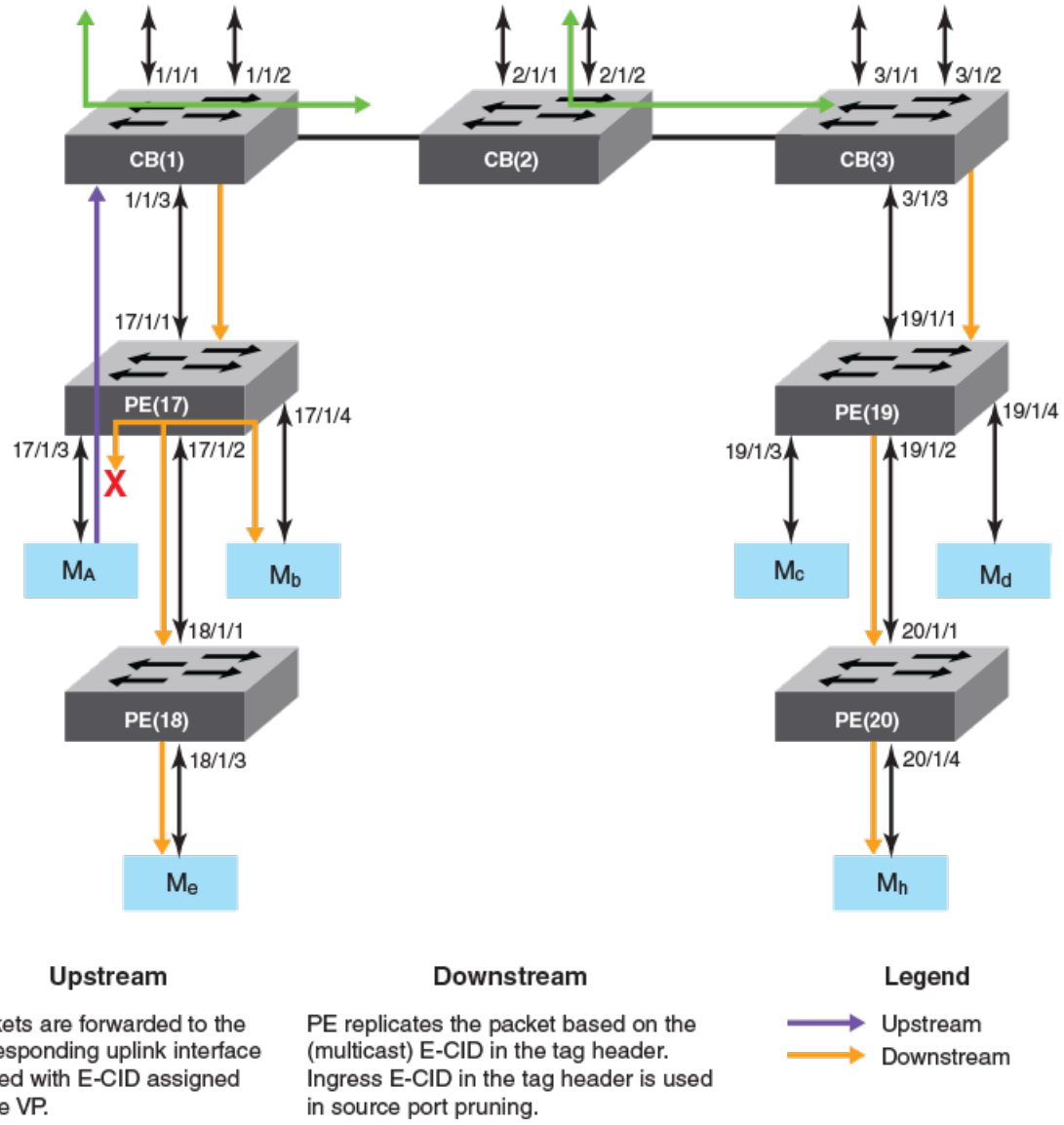

The following explains Layer 2 multicast forwarding.

- The Multicast E-CID Manager on the CB sets up the multicast E-CID forwarding path on the PE using the 802.1BR Control and Status Protocol (CSP).
- A lookup is performed on the PE unit using the multicast E-CID in the packet 802.1BR E-tag header.
- Multi-destination traffic sent by the CB on its cascade ports or LAG ports is always VLAN tagged.
- The PE removes the VLAN tag while replicating the traffic on an untagged VLAN port.

Layer 2 multicast scaling numbers

The following table lists the SPX stacking scaling numbers with IPv4 and IPv6 multicast snooping optimization turned on.

TABLE 49 Layer 2 multicast scaling numbers with optimization turned on

System parameter	Scaling number
IGMP Groups	8192
IGMP Mcache	8192
MLD Groups	8192
MLD Mcache	8192

The following table lists the SPX stacking scaling numbers with IPv4 and IPv6 multicast snooping optimization turned off. This is the default behavior.

TABLE 50 Layer 2 multicast scaling number with optimization turned off

System parameter	Scaling number
IGMP Groups	8192
IGMP Mcache	1024[1]
MLD Groups	8192
MLD Mcache	1024[1]

Layer 3 multicast in an SPX configuration

In a Layer 3 multicast SPX stacking configuration, Layer 3 forwarding lookup for the traffic that ingresses on a PE port is always performed in the CB.

For multi-destination traffic, the CB sends a single copy of the packet for each VLAN to be replicated to the PE unit, while the PE unit performs local replication within the VLAN.

The following figure describes multicast traffic forwarding on Layer 3 devices.

[1] With PE ports being OIFs (receiver ports) and a maximum of 8 SPX ports on each CB unit. This number can be higher with a lesser number of SPX ports on each CB unit.

FIGURE 14 Multicast traffic forwarding on Layer 3 devices

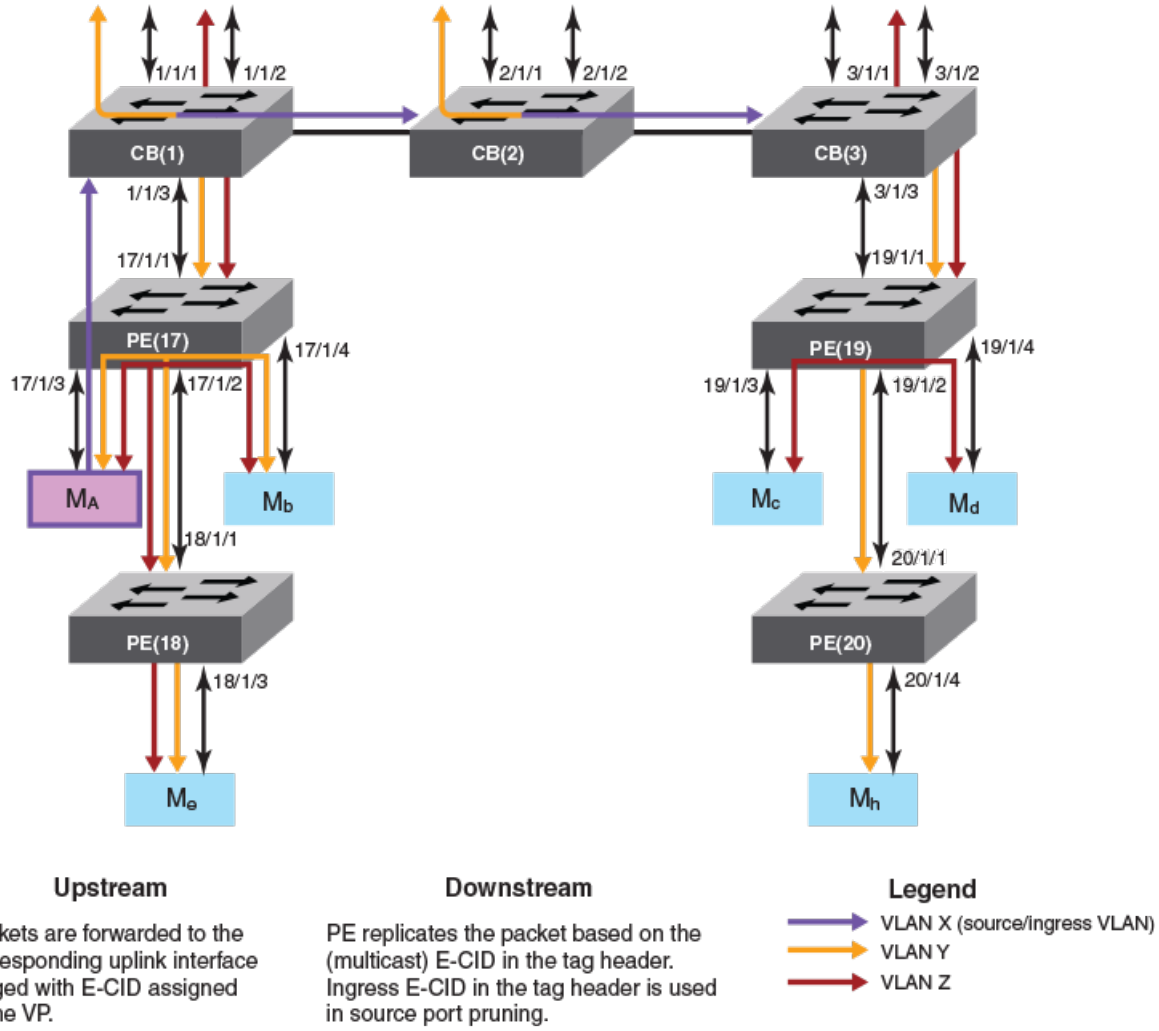

The following describes Layer 3 multicast forwarding in an SPX configuration.

- The Multicast E-CID Manager on the Control Bridge sets up the multicast E-CID forwarding path on the PE using Control and Status Protocol (CSP).
- A lookup is performed on the PE unit using the multicast E-CID in the E-Tag header.
- Multi-destination traffic sent by a CB on its cascade ports or LAGs is always VLAN tagged.
- The PE unit removes the VLAN tag while replicating the traffic on an untagged VLAN port.
- The PE unit can perform local replication within the VLAN.
- The CB sends a copy of the packet for each VLAN with multicast E-CIDs.
- The CB tracks inactivity of PIM mcache entries.

Layer 3 multicast scaling numbers

The following table details the SPX stacking scaling numbers with IPv4 and IPv6 multicast snooping optimization turned on.

TABLE 51 Multicast scaling numbers with optimization turned on

System parameter	Scaling number
IGMP Groups	8192
PIMv4 Mcache	6144
MSDP Peers	64
MSDP SA cache	4096
MLD Groups	8192
PIMv6 Mcache	2048

The following table details the SPX stacking scaling numbers with IPv4 and IPv6 multicast snooping optimization turned off. This is the default behavior.

TABLE 52 Multicast scaling numbers with optimization turned off

System parameter	Scaling number
IGMP Groups	8192
PIMv4 Mcache	1024[2]
MSDP Peers	64
MSDP SA cache	4096
MLD Groups	8192
PIMv6 Mcache	1024[2]

Displaying multicast SPX information

You can view ME-CID topology and summary information using a variety of **show** commands.

Use the following commands to verify multicast SPX information.

Enter the User EXEC or Privileged EXEC mode to run the multicast SPX **show** commands.

The following example of the **show spx multicast cache** command displays the SPX multicast cache information.

```
device# show spx multicast cache
1 E-CID: 5120 UpTime: 00:03:05 LastUpdate: 00:02:29
HWSltMsk: 0x1, L2MC: 1025(Shr), SetID: 0x31255948
Ports 5:
17/1/1 (00:03:05) 17/1/3 (00:02:37) 17/1/5 (00:03:05) 17/1/7 (00:03:05)
17/1/10(00:02:29)
2 E-CID: 6451 UpTime: 00:01:31 LastUpdate: 00:00:44
HWSltMsk: 0x1, L2MC: 1025(Shr), SetID: 0x31255948
Ports 5:
17/1/1 (00:01:20) 17/1/3 (00:00:44) 17/1/5 (00:01:20) 17/1/7 (00:01:31)
17/1/10(00:01:31)
3 E-CID: 9276 UpTime: 00:00:07 LastUpdate: 00:00:07
HWSltMsk: 0x1, L2MC: 1027(Shr), SetID: 0x31739250
Ports 2:
17/1/2 (00:00:07) 17/1/14(00:00:07)
```

[2] With PE ports being OIFs (receiver ports) and a maximum of 8 SPX ports on each CB unit. This number can be higher with a lesser number of SPX ports on each CB unit.

The following example of the **show spx multicast optimization** command displays the multicast replication resource optimization details.

```
device# show spx multicast optimization 2
Total L2MCs Allocated: 2; Available: 7166; Failed: 0
Index L2MC SetId Users Set
1. 1027 0x31739250 1 {<17/1/14>,<17/1/2>,}
2. 1025 0x31255948 2 {<17/1/10>,<17/1/7>,<17/1/5>,<17/1/3>,
<17/1/1>,}
Sharability Coefficient: 50%
```

The following example of the **show spx multicast resource** command displays the multicast memory pool details.

```
device# show spx multicast resource
              alloc in-use avail get-fail limit get-mem size init
fwd mcache     64     3      61     0     14848   3      62   64
tx port info   256    12     244    0     59392   12     23   256
```

IP multicast hardware entry optimization

IP multicast (IPMC) entries are used to replicate Layer 3 multicast packets in the hardware. Each multicast route entry points to the IPMC entry to replicate this flow at the hardware level.

If multiple route entries share the same Output Interfaces (OIFs) for replication, a single IPMC entry is shared with all the route entries. IPMC entry optimization reduces the usage of IPMC entries in the hardware, which in turn helps scalability in environments with a large number of multicast traffic flows. However, in a stacking setup, replication sharing may cause a momentary traffic drop in certain scenarios. This traffic drop occurs for existing receivers of a multicast flow. Traffic drops take place because when a flow moves from a shared IPMC to a new IPMC, the new IPMC needs to be programmed on all the stack units. IPMC programming on all the stack units does not occur at the same time. IPMC information is synchronized to the stack units, and it must be programmed locally on the specific units. Because the IPMC programming must be handled locally, the programming of IPMC entries is delayed on stack units.

Layer 2 multicast packets also share the IPMC entries in the same way. Momentary traffic loss does not occur on non-SPX stack for Layer 2 multicast traffic. However, an SPX stack uses IPMC entries for Layer 2 multicast replication, hence a momentary traffic loss may occur if the flow moves to a new IPMC because of sharing.

How disabling IP multicast hardware entry optimization works

If a network environment does not have a large number of traffic flows, and is sensitive to traffic drops, IPMC optimization can be disabled globally. When you disable IPMC optimization, a separate IPMC is allocated for each multicast traffic flow, even though they have the same OIF combinations. When the OIF of a flow changes, the same IPMC is used to program the modified OIFs. Because the IPMC entries remain the same, existing receivers that have not changed on the stack units continue to receive traffic and there are no traffic drops.

IPMC optimization can be disabled for IPv4 and IPv6 multicast flows independently. When IPMC optimization is disabled through the CLI, all the multicast flows (across all VRFs) are deleted and must be re-programmed. As these flows are relearned, separate IPMC entries are allocated for each flow. This behavior continues even when IPMC optimization is re-enabled.

Disabling multicast hardware entry optimization

You can disable Layer 2 and Layer 3 multicast hardware entry optimization for IPv4 and IPv6 multicast flows. The following commands need to be run only on the active unit.

1. Enter the **configure terminal** command to access global configuration mode.

```
device# configure terminal
```

2. Enter the **no ip multicast-routing optimization** command followed by the **oif-list** and **all** keywords to disable Layer 3 IPMC sharing for IPv4 multicast flows. To disable Layer 3 IPMC sharing for IPv6 multicast flows, enter the **no ipv6 multicast-routing optimization** command followed by the **oif-list** and **all** keywords.

```
device(config)# no ip multicast-routing optimization oif-list all
device(config)# no ipv6 multicast-routing optimization oif-list all
device(config)# write memory
device(config)# exit
device# reload
```

3. Enter the **no ip multicast optimization** command followed by the **oif-list** and **all** keywords to disable Layer 2 IPMC sharing for IPv4 multicast flows. To disable Layer 2 IPMC sharing for IPv6 multicast flows, enter the **no ipv6 multicast optimization** command followed by the **oif-list** and **all** keywords.

```
device(config)# no ip multicast optimization oif-list all
device(config)# no ipv6 multicast optimization oif-list all
device(config)# write memory
device(config)# exit
device# reload
```

NOTE
Entry optimization is disabled by default on the ICX 7750 for Layer 2 and Layer 3 multicast traffic.



© 2019 ARRIS Enterprises LLC. All rights reserved.
Ruckus Wireless, Inc., a wholly owned subsidiary of ARRIS International plc.
350 West Java Dr., Sunnyvale, CA 94089 USA
www.ruckuswireless.com